1 TOYOTA TACOMA

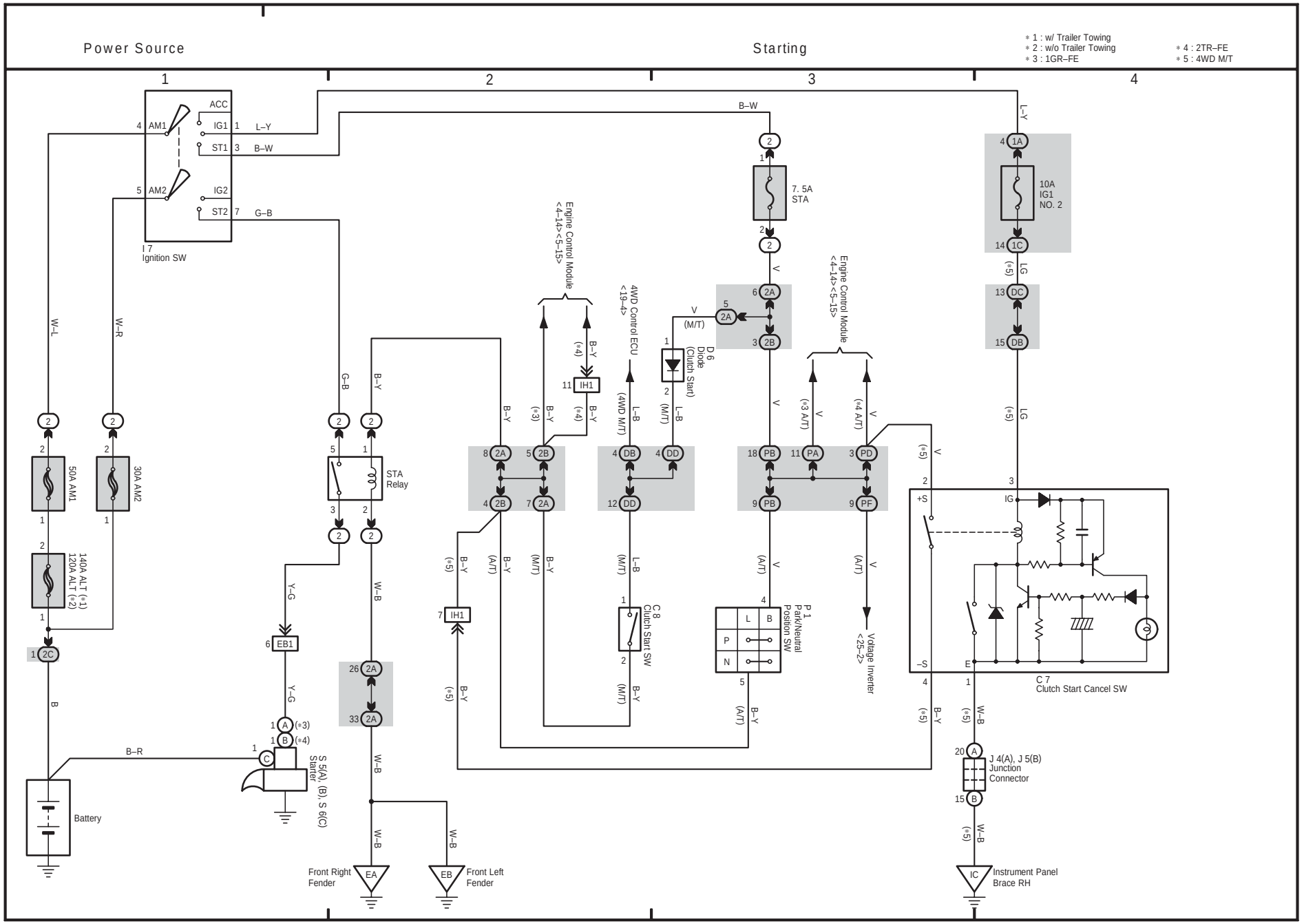

2 TOYOTA TACOMA

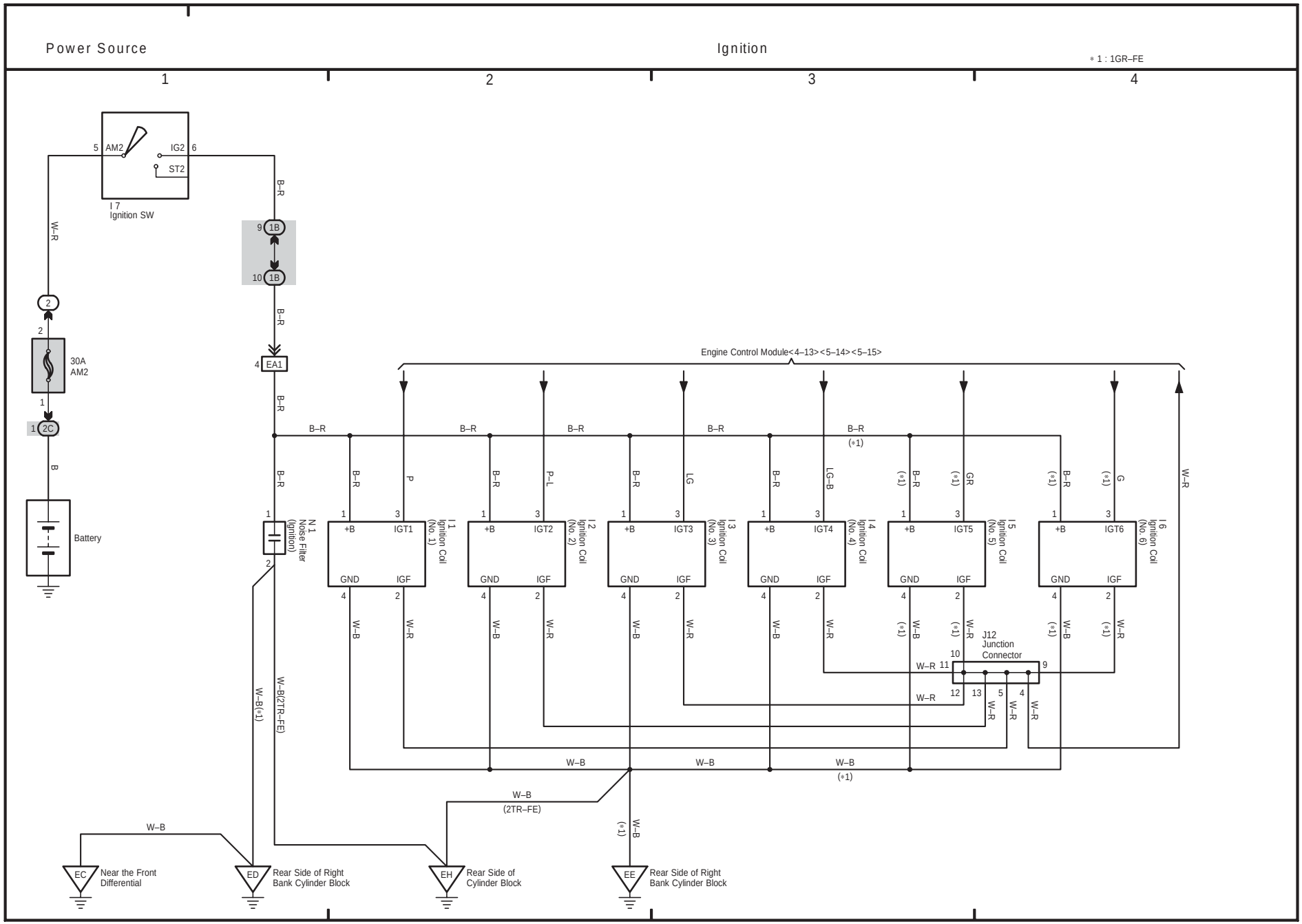

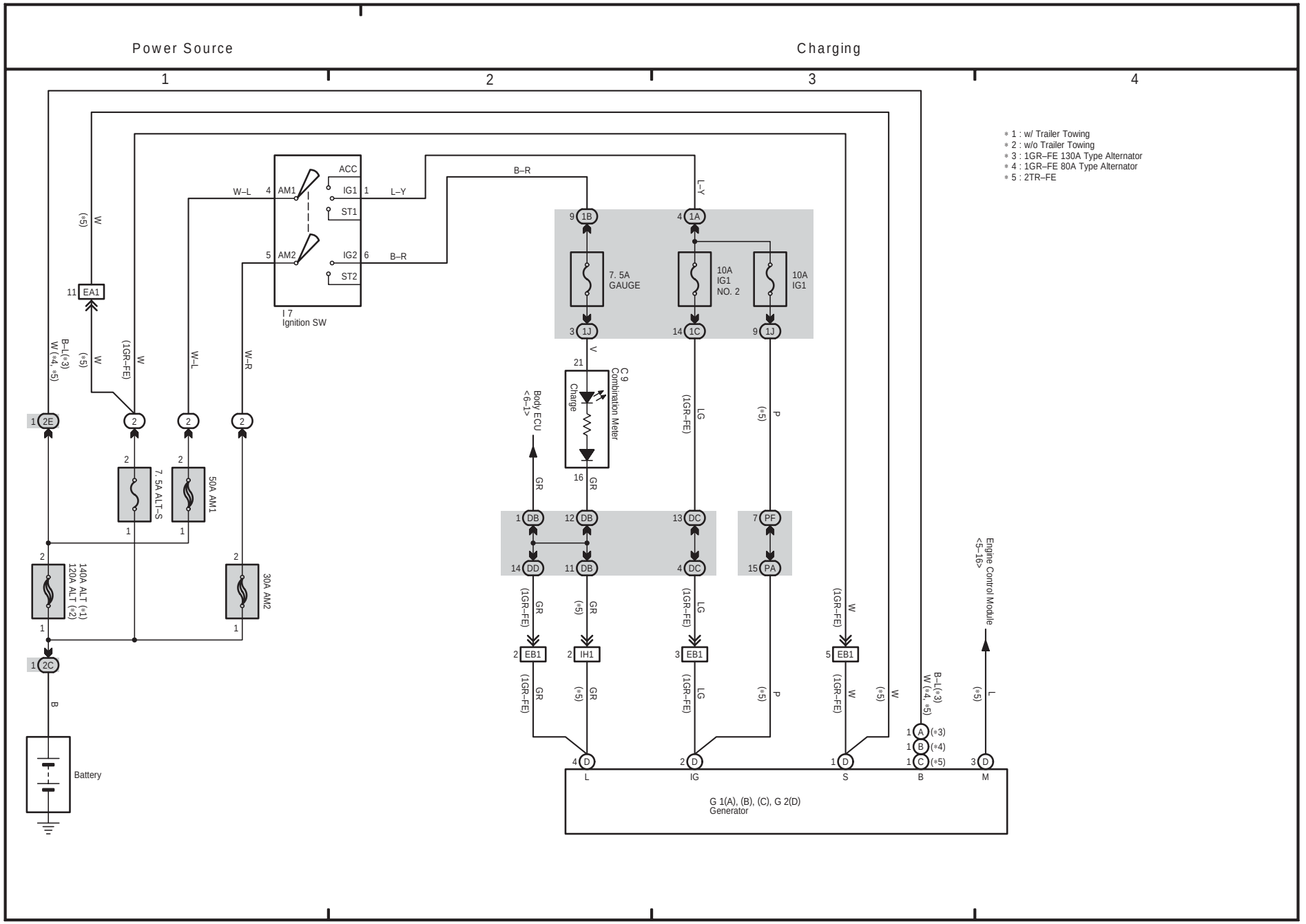
Power Source
Charging
1
2
3
4
* 1 : w/ Trailer Towing
* 2 : w/o Trailer Towing
* 3 : 1GR–FE 130A Type Alternator
* 4 : 1GR–FE 80A Type Alternator
* 5 : 2TR–FE
ACC
IG1
ST1
IG2
ST2
AM1
AM2
I 7
Ignition SW
W–L
B–R
L–Y
W
(*5)
11 EA1
B–L (*3)
W (*4, *5)
(*5)
(1GR–FE)
1 2E
2
7. 5A ALT–S
50A AM1
140A ALT (*1)
120A ALT (*2)
30A AM2
1 2C
B
Battery
9 1B
4 1A
7. 5A
GAUGE
10A
IG1
NO. 2
10A
IG1
3 1J
14 1C
9 1J
21
V
C 9
Combination Meter
Charge
16
GR
Body ECU
<6–1>
LG
P
1 DB
12 DB
13 DC
7 PF
14 DD
11 DB
4 DC
15 PA
2 EB1
2 IH1
3 EB1
5 EB1
4 D
2 D
1 D
1 A (*3)
1 B (*4)
1 C (*5)
3 D
L
IG
S
B
M
Engine Control Module
<5–16>
G 1(A), (B), (C), G 2(D)
Generator

(Cont. next page)

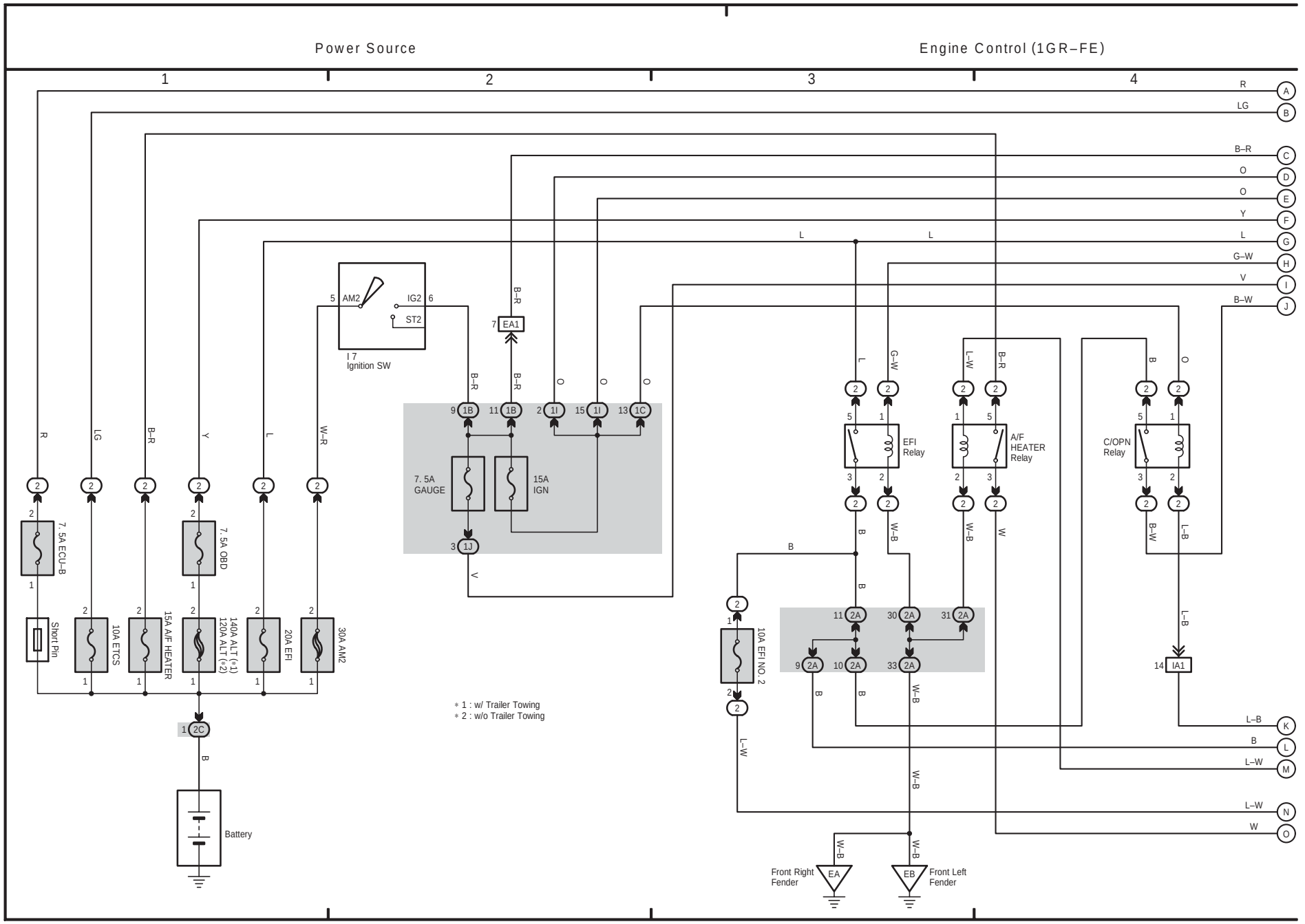

(Cont. next page)

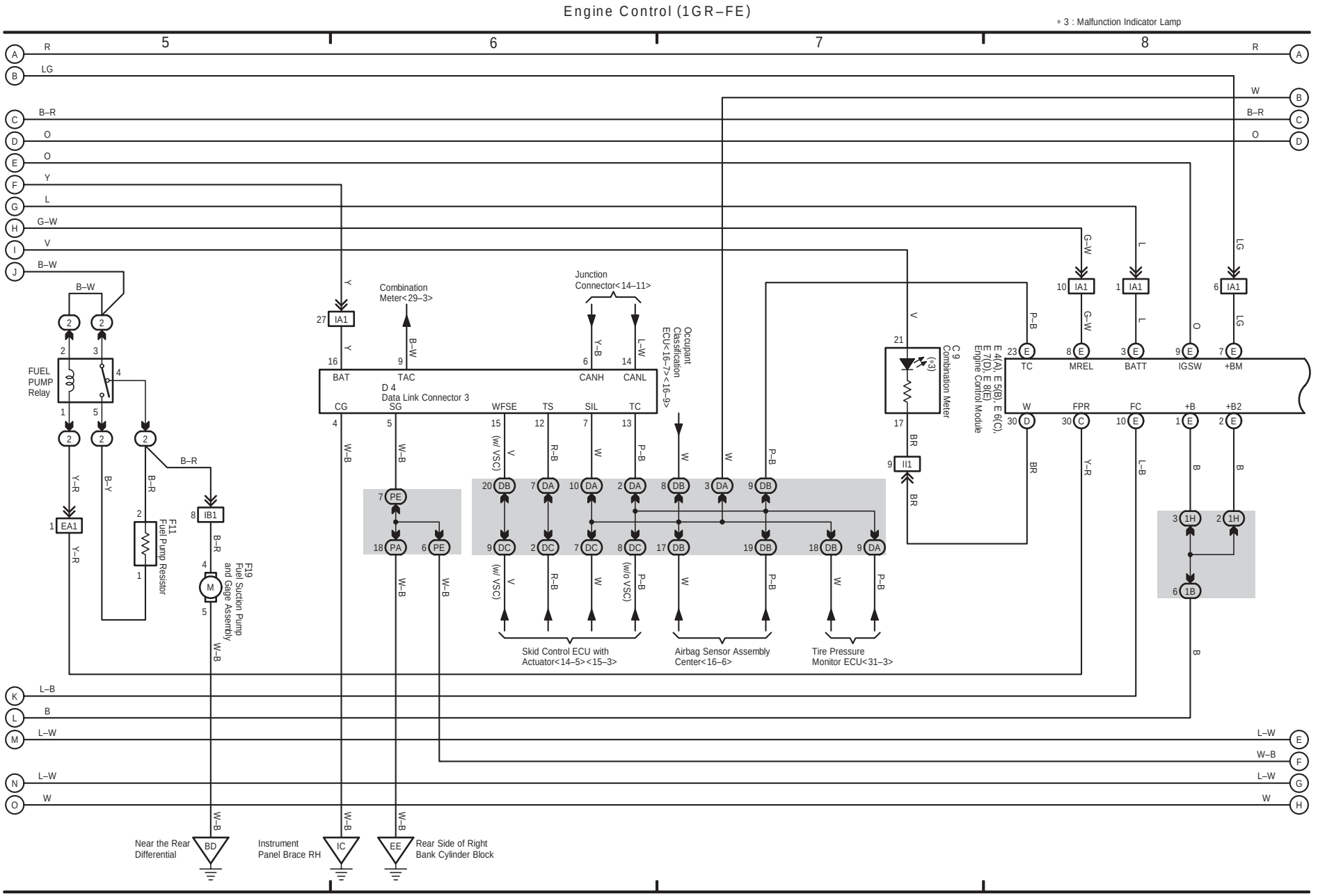

4 TOYOTA TACOMA (Cont' d)

(Cont. next page)

Engine Control (1GR–FE)

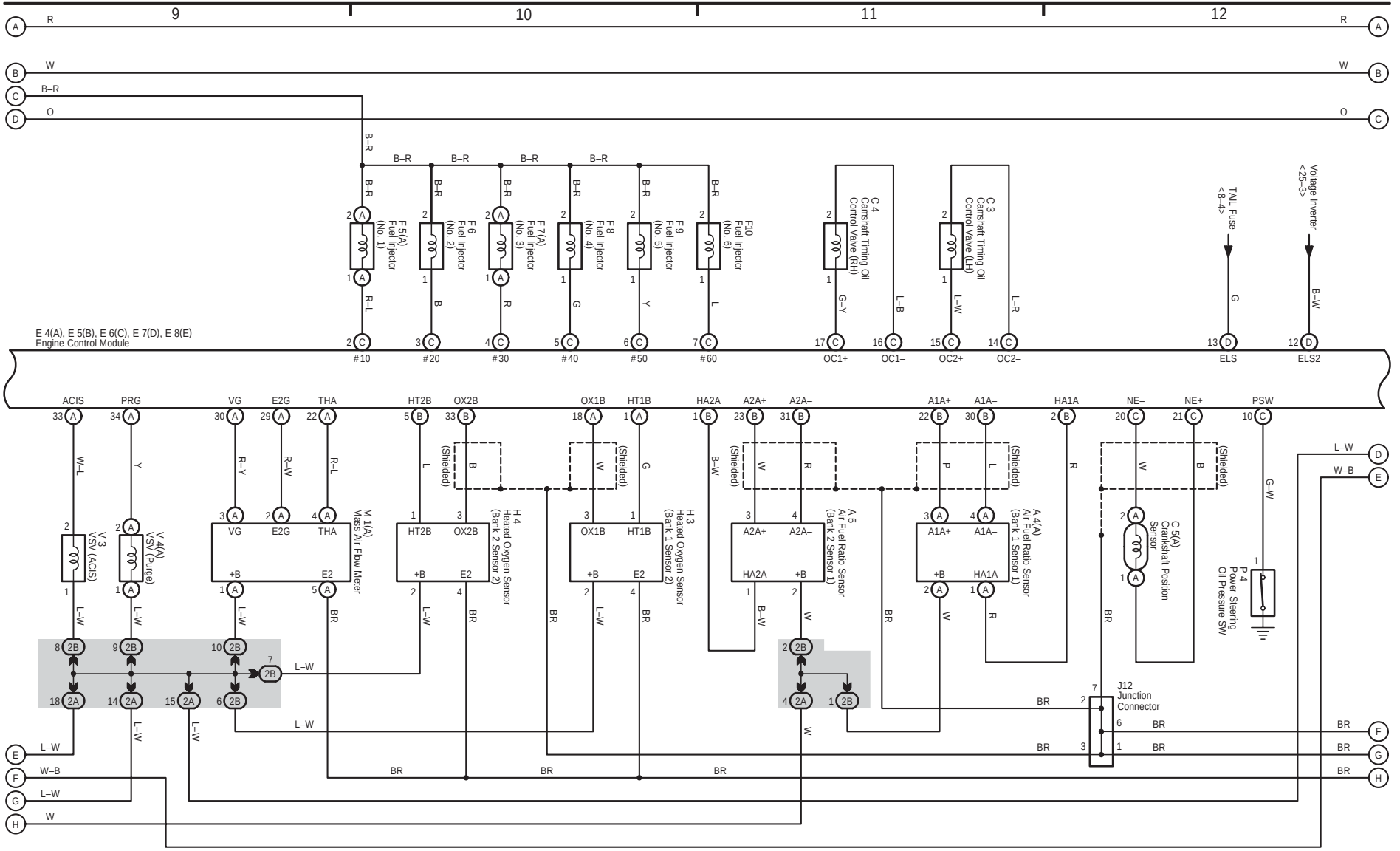

(Cont. next page)

Engine Control (1GR–FE)

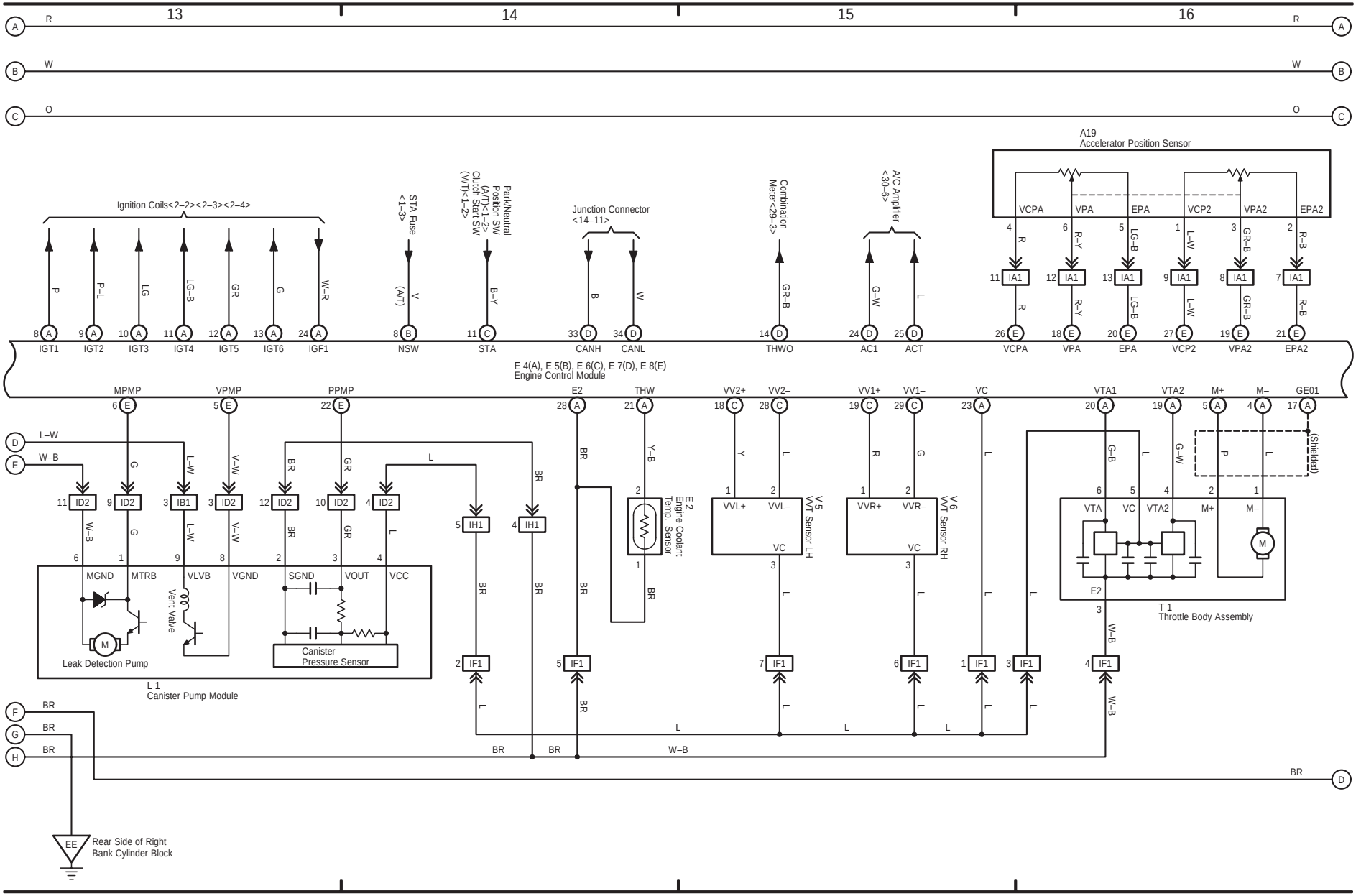

4 TOYOTA TACOMA (Cont' d)

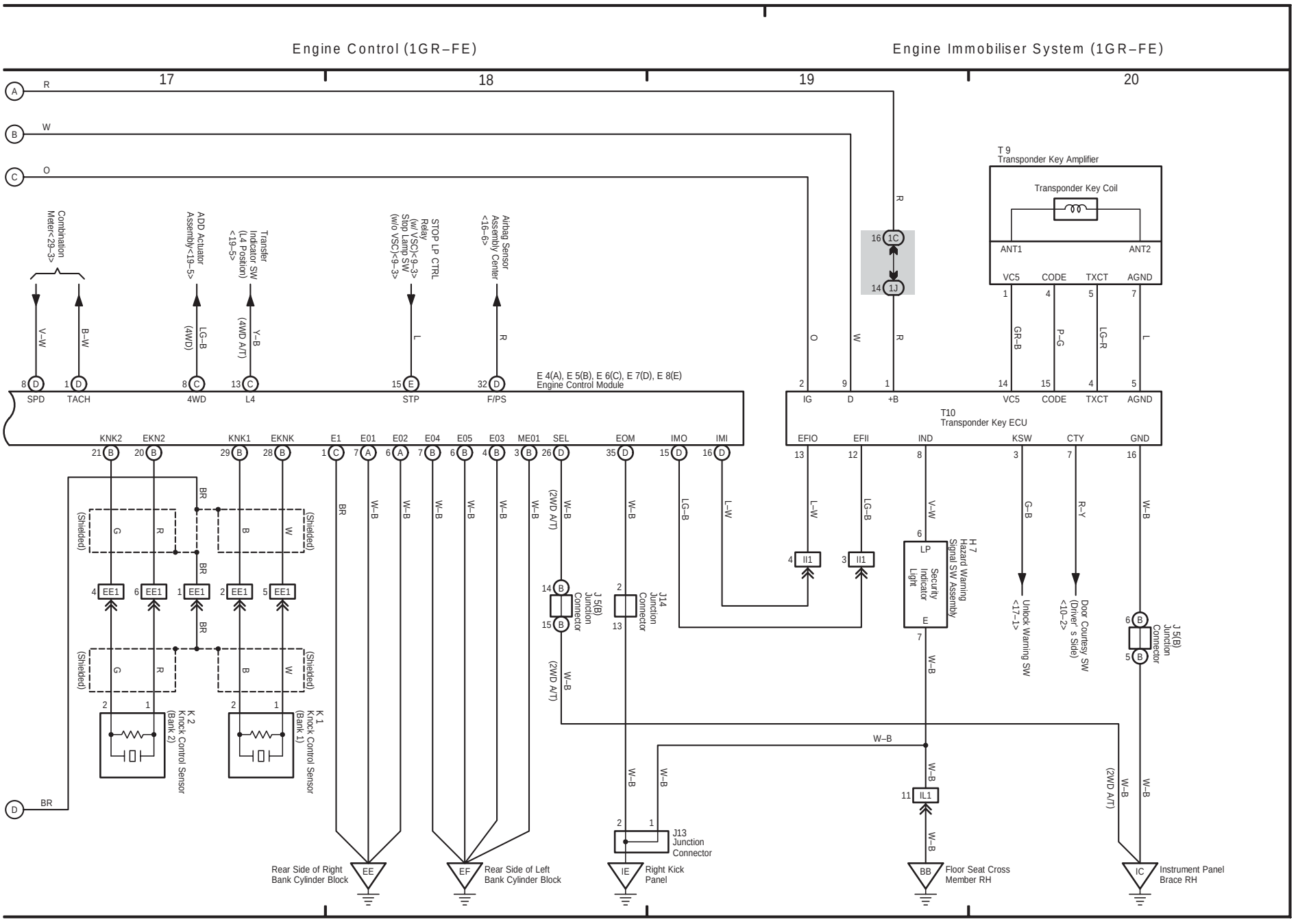

(Cont. next page)

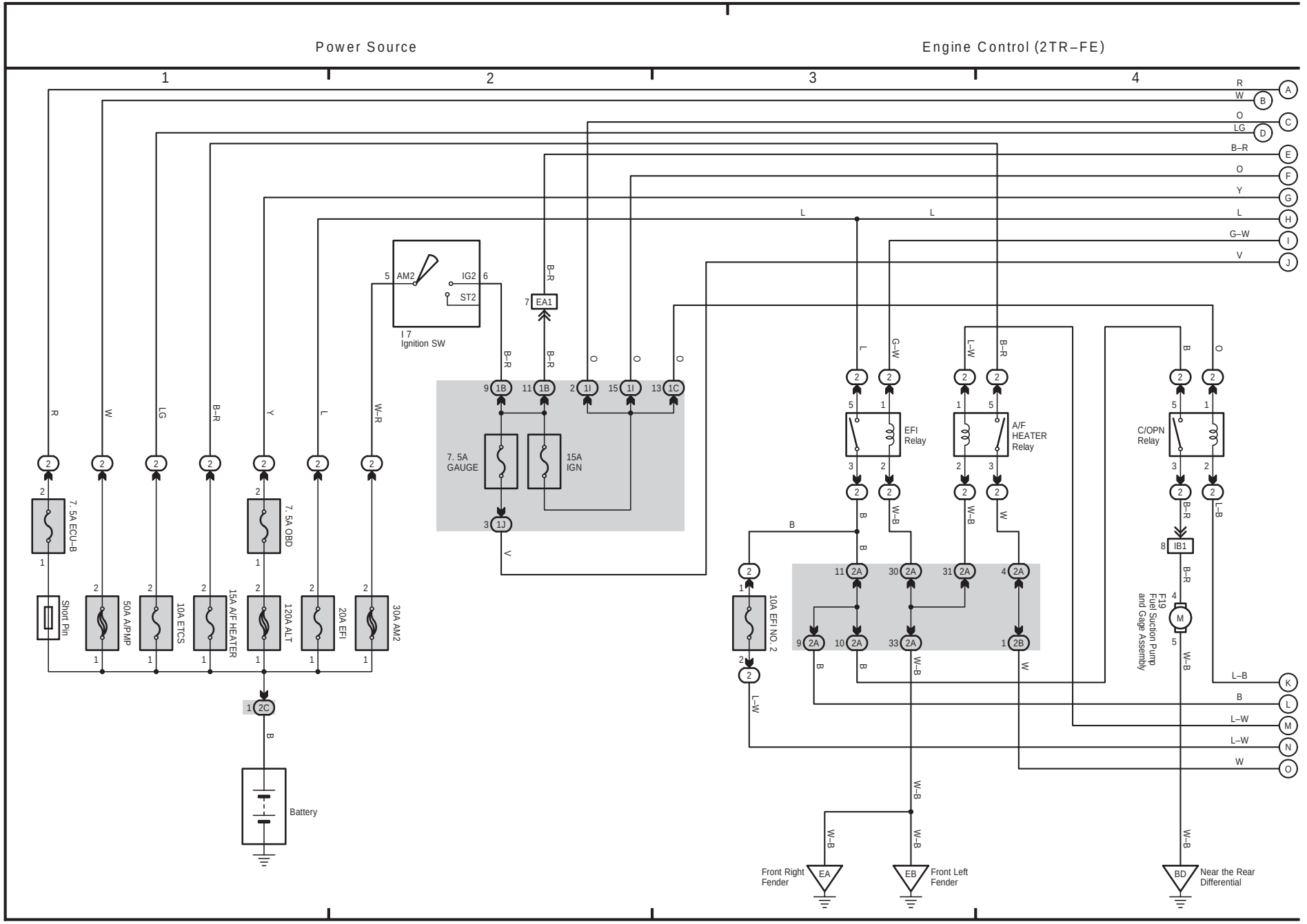

(Cont. next page)

Engine Control (2TR–FE)

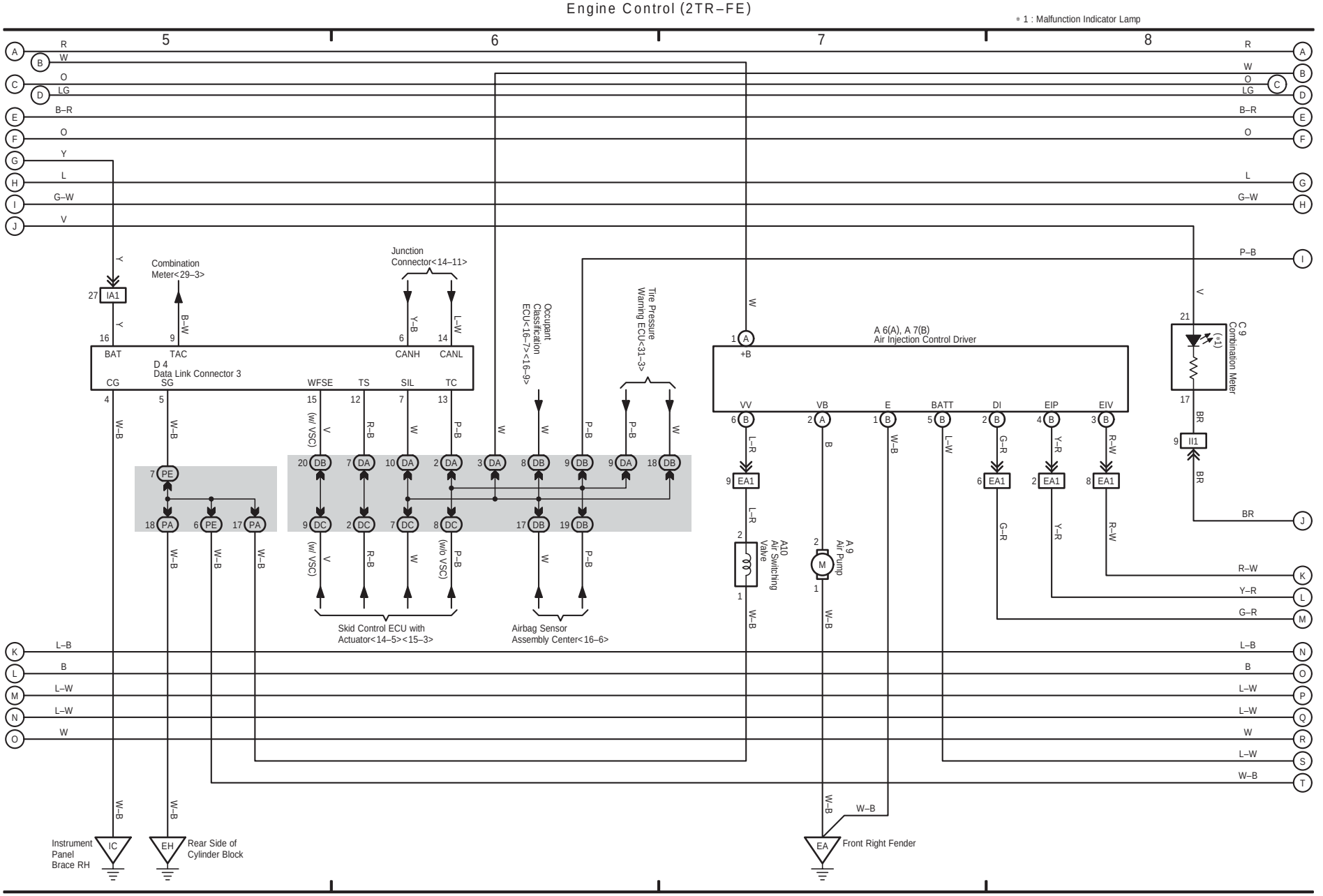

5 TOYOTA TACOMA (Cont' d)

(Cont. next page)

Engine Control (2TR–FE)

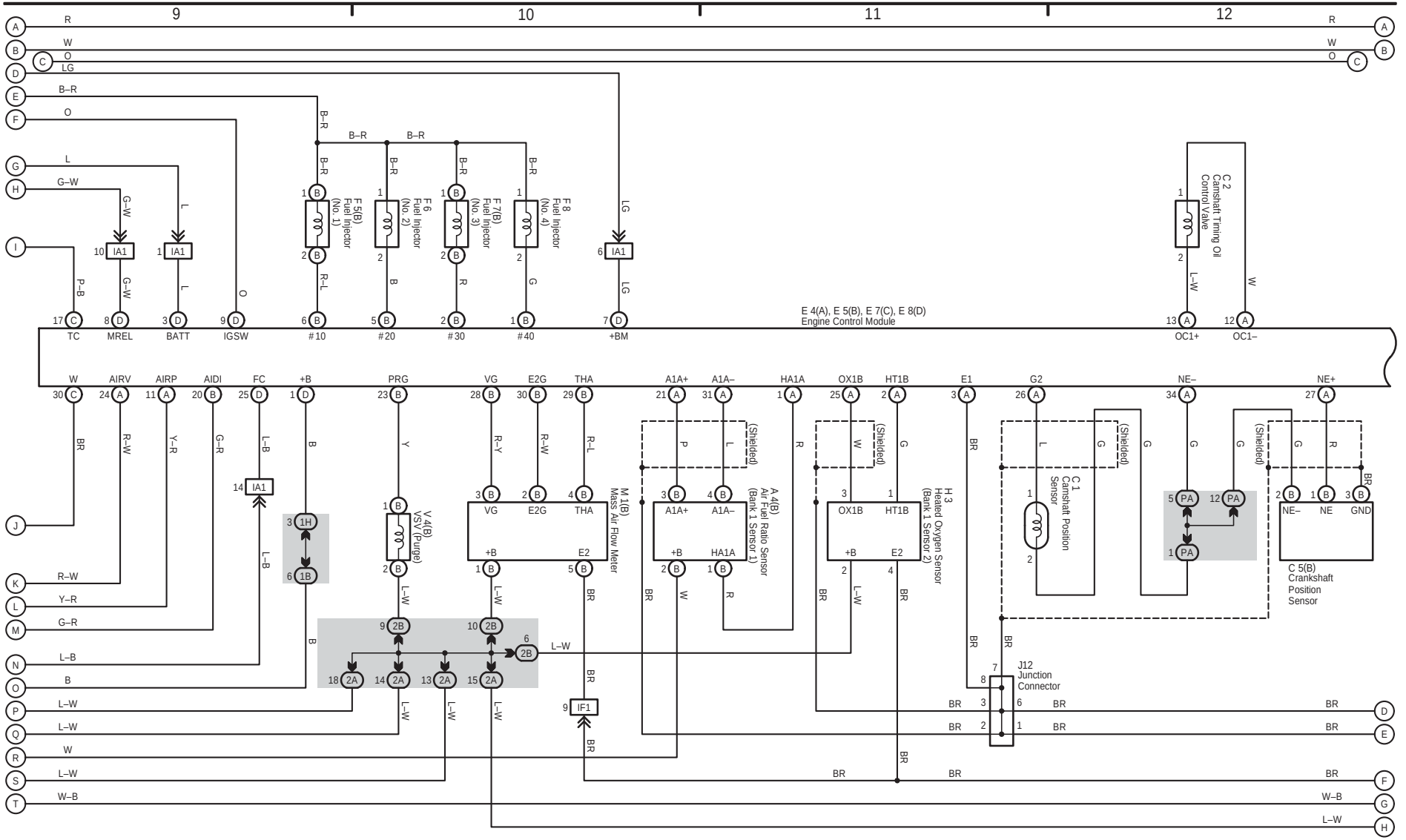

(Cont. next page)

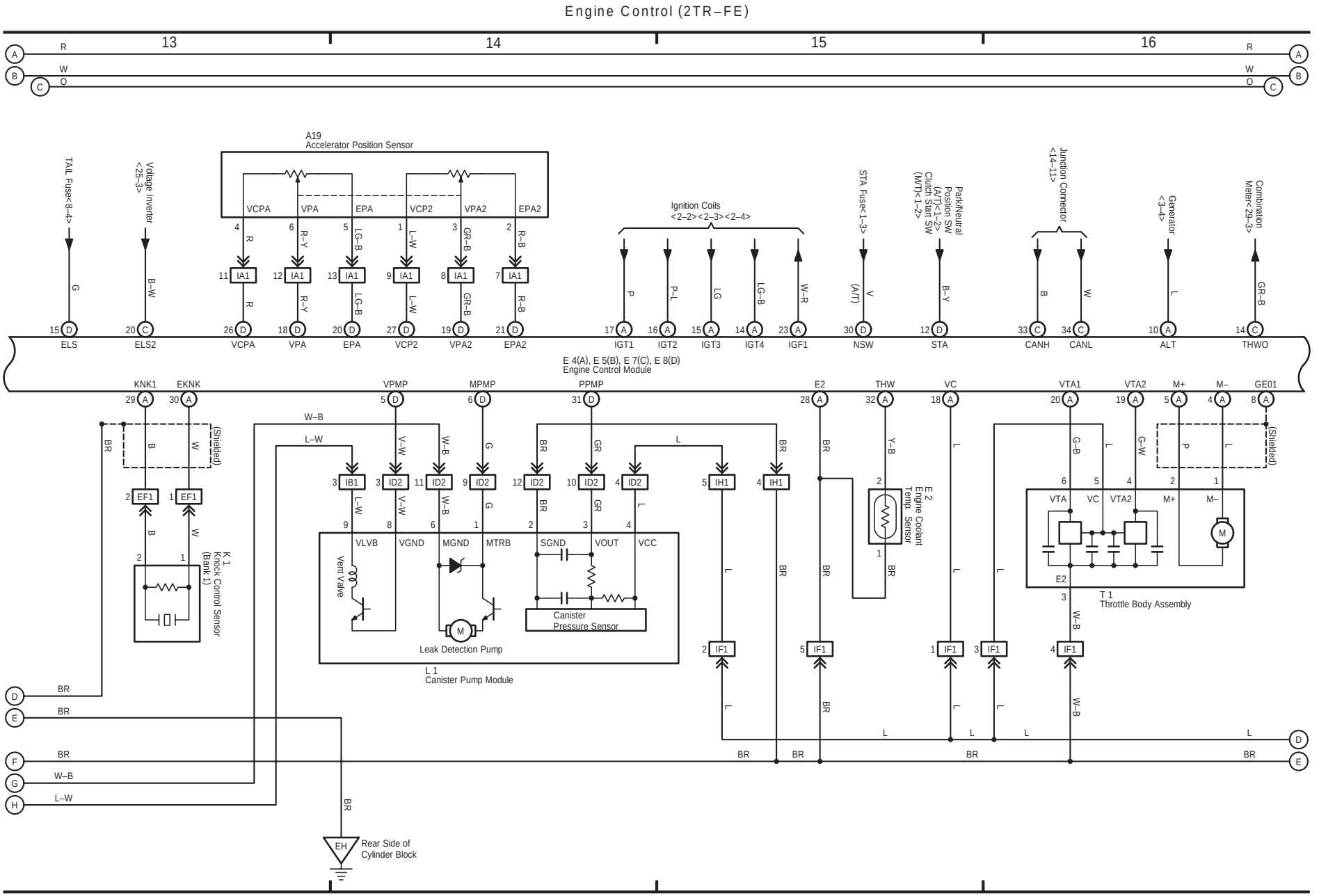

5 TOYOTA TACOMA (Cont' d)

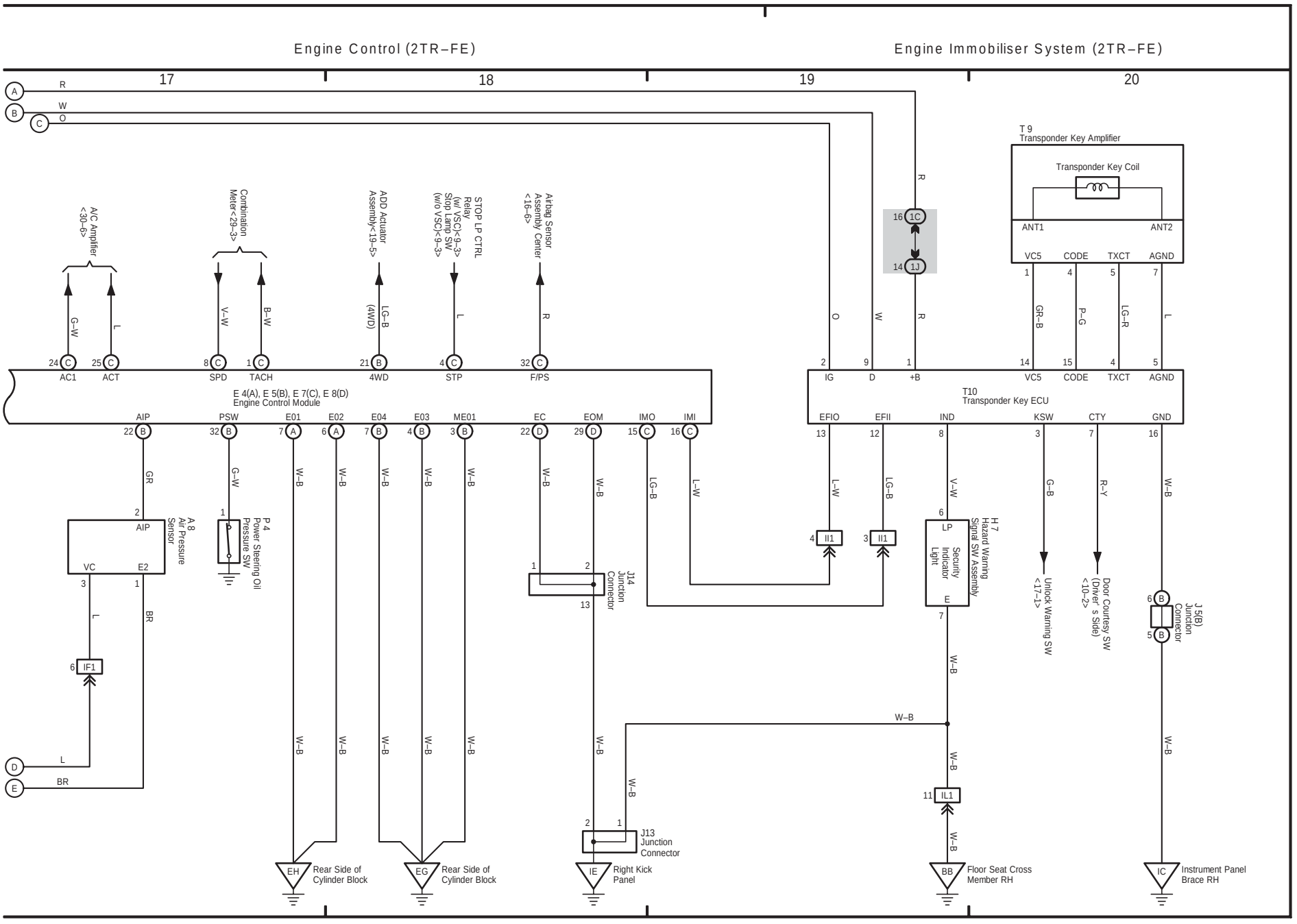

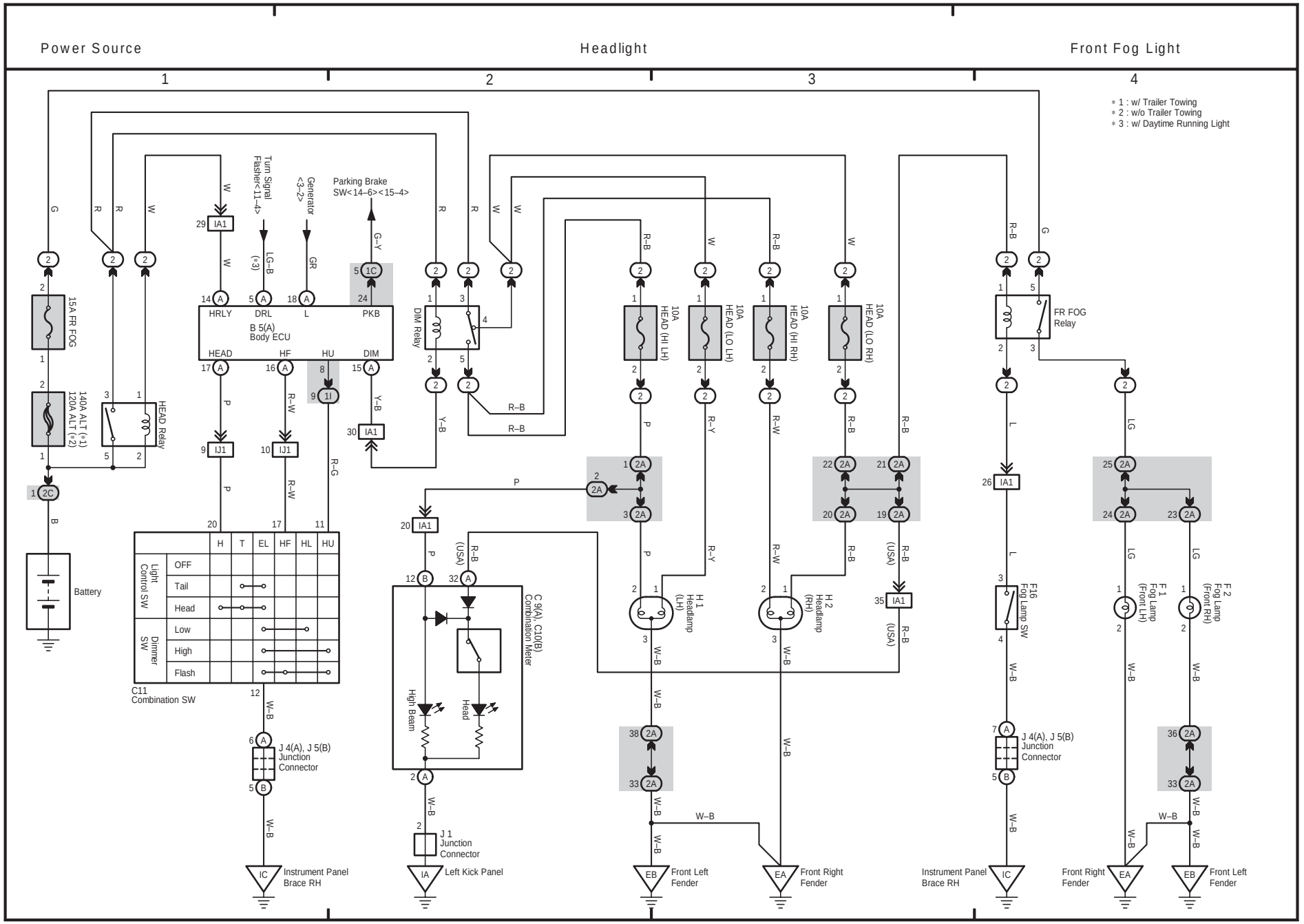
Power Source
Headlight
Front Fog Light
1
2
3
4
* 1 : w/ Trailer Towing
* 2 : w/o Trailer Towing
* 3 : w/ Daytime Running Light
15A FR FOG
140A ALT (*1)
120A ALT (*2)
HEAD Relay
Battery
Turn Signal Flasher<11–4>
Generator <3–2>
Parking Brake SW<14–6><15–4>
B 5(A) Body ECU
HRLY
DRL
L
PKB
HEAD
HF
HU
DIM
DIM Relay
10A HEAD (HI LH)
10A HEAD (LO LH)
10A HEAD (HI RH)
10A HEAD (LO RH)
FR FOG Relay
C11 Combination SW
Light Control SW
Dimmer SW
OFF
Tail
Head
Low
High
Flash
H
T
EL
HF
HL
HU
J 4(A), J 5(B) Junction Connector
J 1 Junction Connector
C 9(A) C10(B) Combination Meter
High Beam
Head
H 1 Headlamp (LH)
H 2 Headlamp (RH)
F16 Fog Lamp SW
F 1 Fog Lamp (Front LH)
F 2 Fog Lamp (Front RH)
(USA)
Instrument Panel Brace RH
Left Kick Panel
Front Left Fender
Front Right Fender

(Cont. next page)

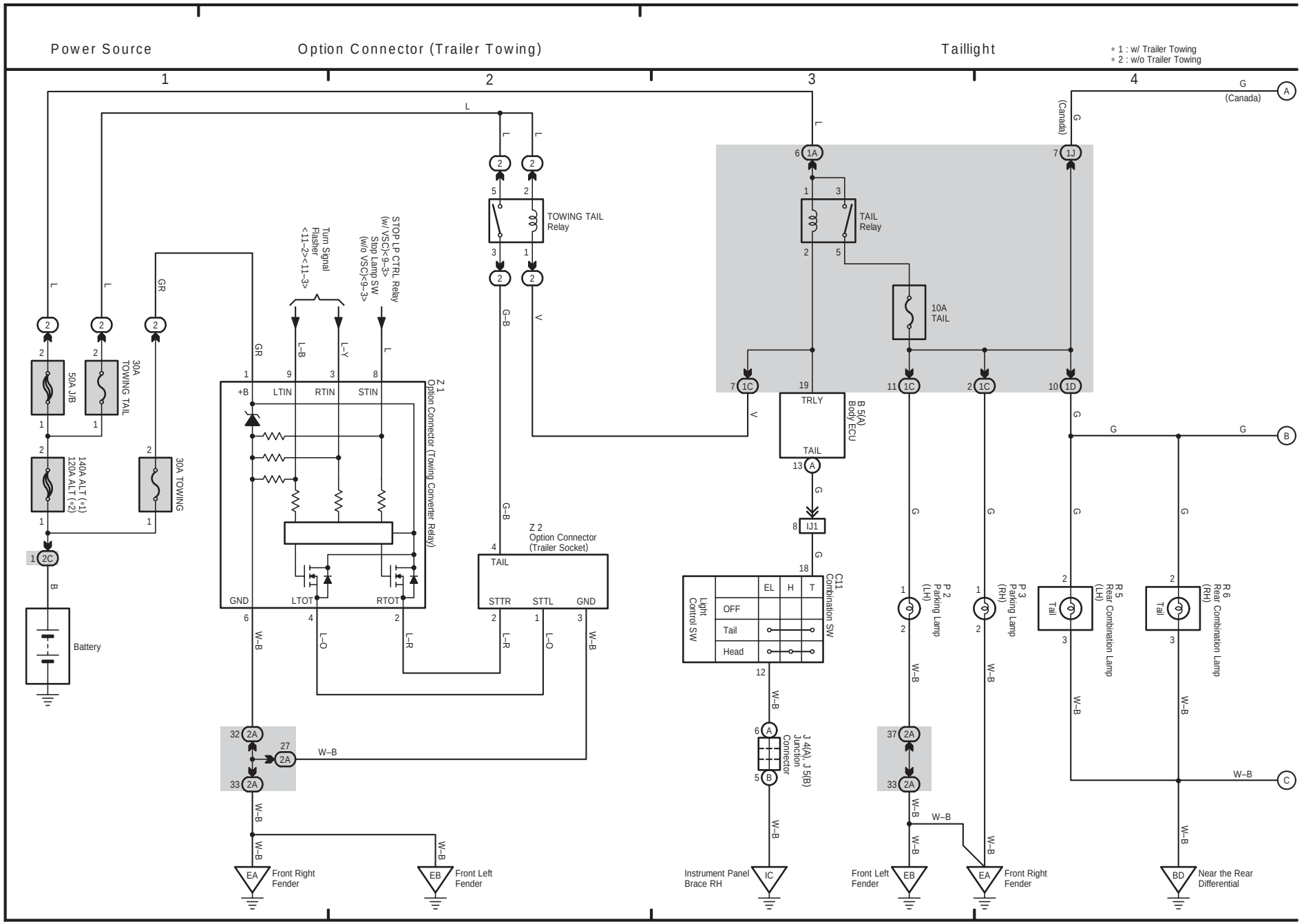

7 TOYOTA TACOMA (Cont' d)

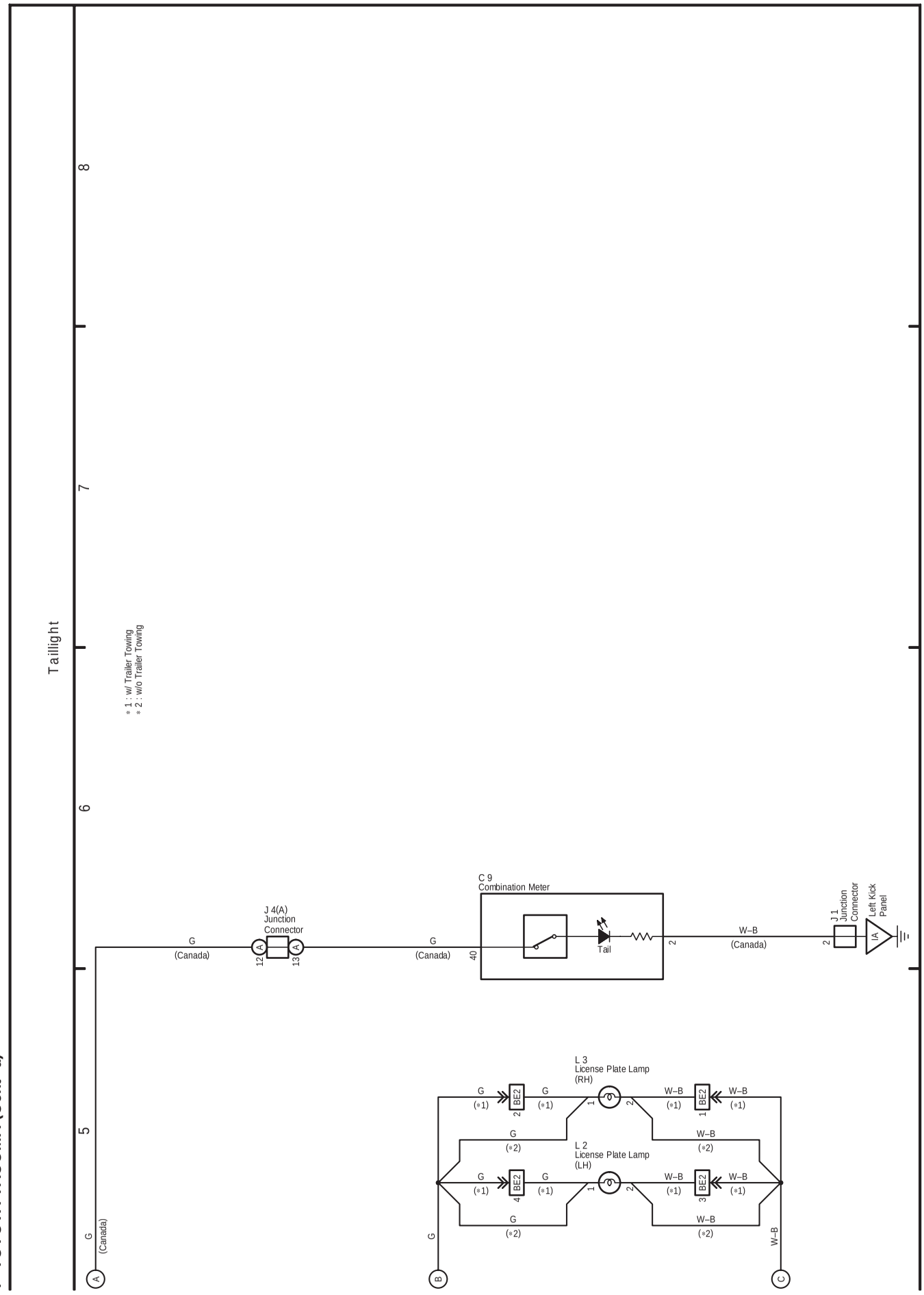

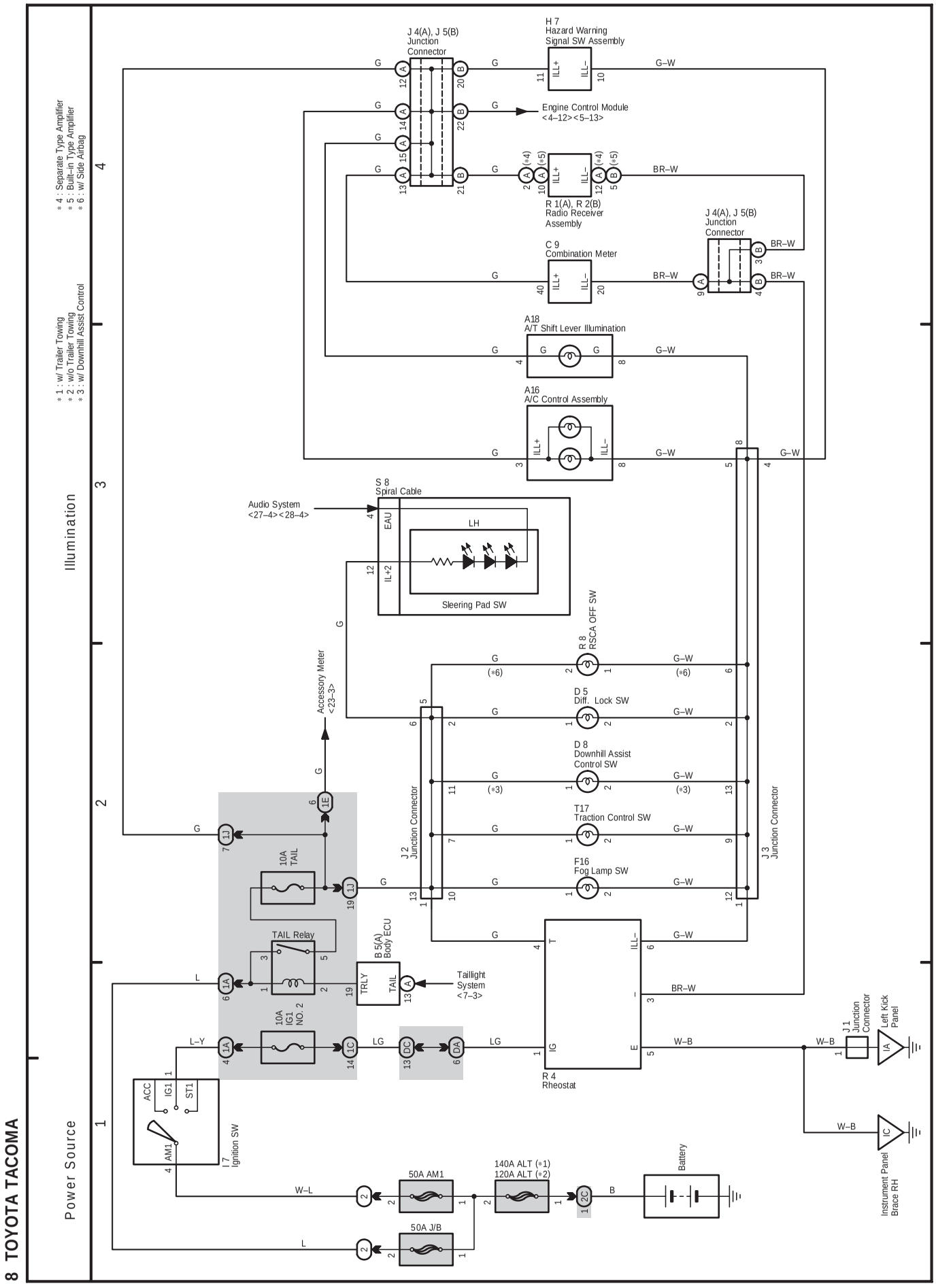
J 4(A), J 5(B) Junction Connector
H 7 Hazard Warning Signal SW Assembly
Engine Control Module <4–12><5–13>
R 1(A), R 2(B) Radio Receiver Assembly
C 9 Combination Meter
J 4(A), J 5(B) Junction Connector
A18 A/T Shift Lever Illumination
A16 A/C Control Assembly
S 8 Spiral Cable
Audio System <27–4><28–4>
Sleering Pad SW
R 8 RSCA OFF SW
Accessory Meter <23–3>
D 5 Diff. Lock SW
D 8 Downhill Assist Control SW
T17 Traction Control SW
F16 Fog Lamp SW
J 2 Junction Connector
J 3 Junction Connector
10A TAIL
TAIL Relay
B 5(A) Body ECU
Taillight System <7–3>
10A IG1 NO. 2
R 4 Rheostat
J 1 Junction Connector
Left Kick Panel
Instrument Panel Brace RH
I 7 Ignition SW
50A AM1
140A ALT (*1) 120A ALT (*2)
Battery
50A J/B
Illumination
Power Source
* 1 : w/ Trailer Towing
* 2 : w/o Trailer Towing
* 3 : w/ Downhill Assist Control
* 4 : Separate Type Amplifier
* 5 : Built–in Type Amplifier
* 6 : w/ Side Airbag

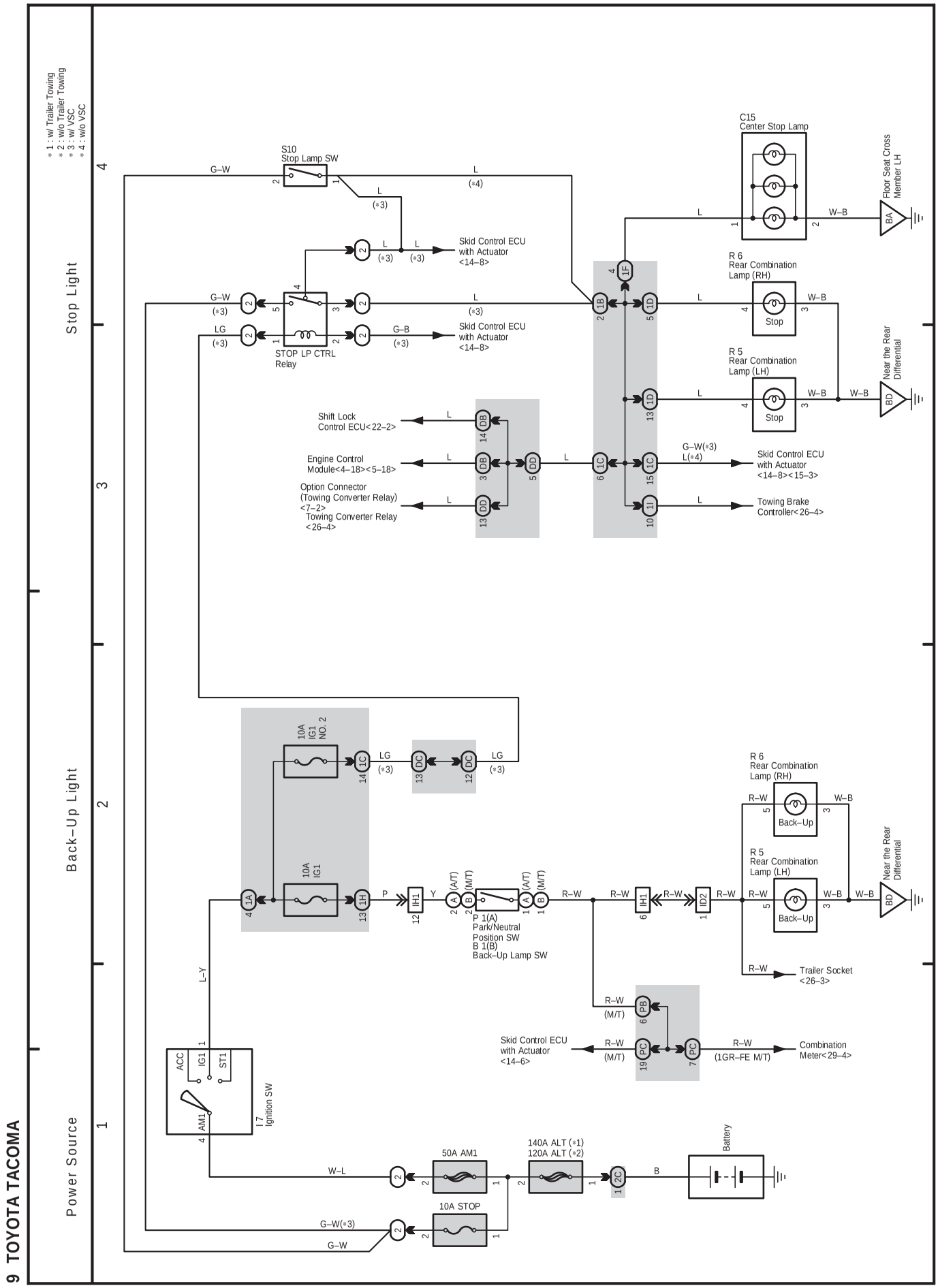
* 1 : w/ Trailer Towing
* 2 : w/o Trailer Towing
* 3 : w/ VSC
* 4 : w/o VSC
Stop Light
Back–Up Light
Power Source
S10
Stop Lamp SW
C15
Center Stop Lamp
Floor Seat Cross Member LH
Skid Control ECU with Actuator <14–8>
STOP LP CTRL Relay
R 6
Rear Combination Lamp (RH)
R 5
Rear Combination Lamp (LH)
Stop
Near the Rear Differential
Shift Lock Control ECU<22–2>
Engine Control Module<4–18><5–18>
Option Connector (Towing Converter Relay) <7–2>
Towing Converter Relay <26–4>
Skid Control ECU with Actuator <14–8><15–3>
Towing Brake Controller<26–4>
10A IG1 NO. 2
10A IG1
Back–Up
P 1(A) Park/Neutral Position SW
B 1(B) Back–Up Lamp SW
Trailer Socket <26–3>
Skid Control ECU with Actuator <14–6>
Combination Meter<29–4>
I 7 Ignition SW
ACC
IG1
ST1
AM1
50A AM1
140A ALT (*1)
120A ALT (*2)
10A STOP
Battery

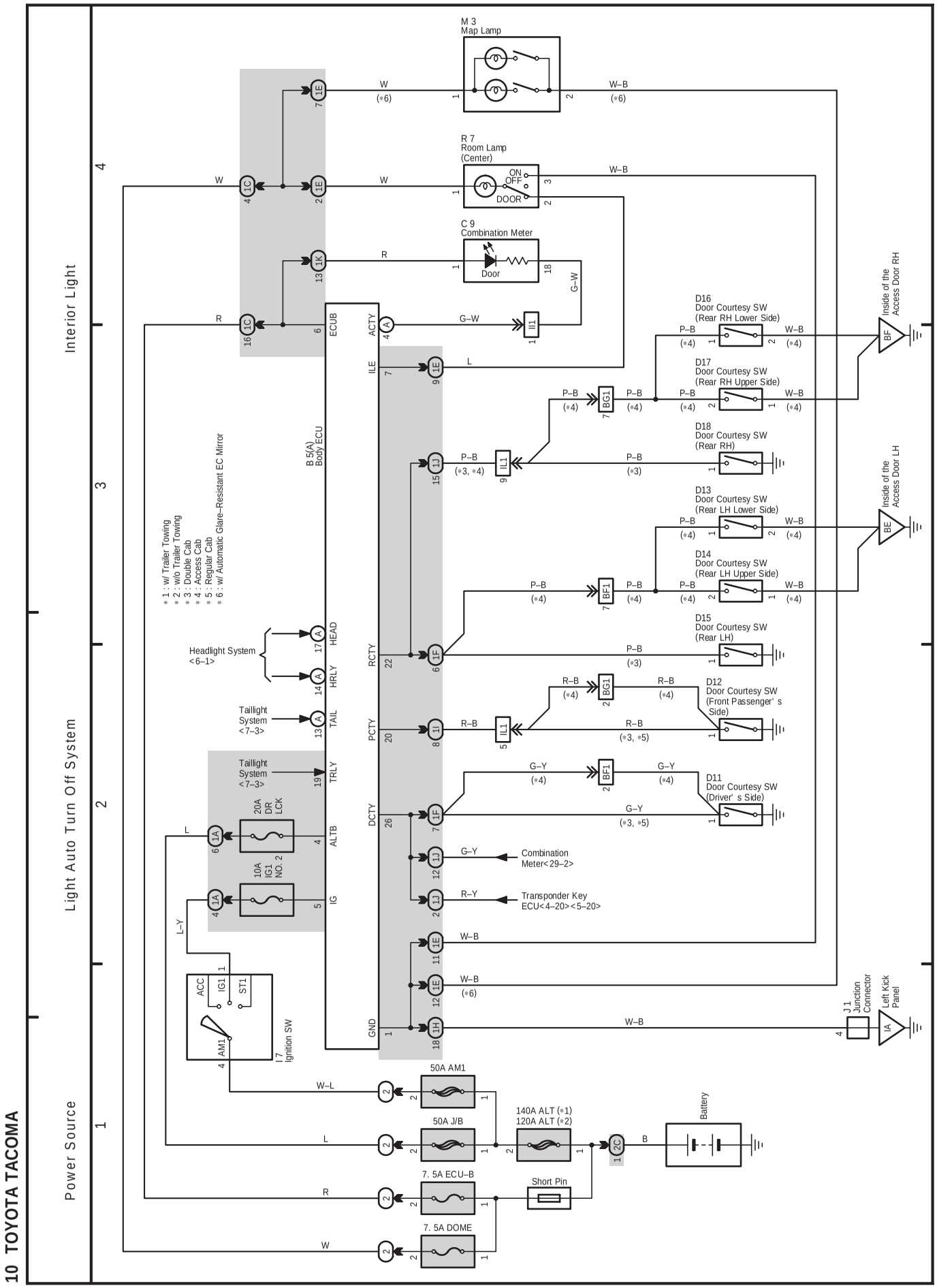
Interior Light
Light Auto Turn Off System
Power Source
M 3
Map Lamp
R 7
Room Lamp
(Center)
ON
OFF
DOOR
C 9
Combination Meter
Door
B 5(A)
Body ECU
ECUB
ACTY
ILE
RCTY
PCTY
DCTY
GND
HEAD
HRLY
TAIL
TRLY
ALTB
IG
Headlight System
<6–1>
Taillight
System
<7–3>
Taillight
System
<7–3>
20A
DR
LCK
10A
IG1
NO. 2
ACC
IG1
ST1
AM1
I 7
Ignition SW
D16
Door Courtesy SW
(Rear RH Lower Side)
D17
Door Courtesy SW
(Rear RH Upper Side)
D18
Door Courtesy SW
(Rear RH)
D13
Door Courtesy SW
(Rear LH Lower Side)
D14
Door Courtesy SW
(Rear LH Upper Side)
D15
Door Courtesy SW
(Rear LH)
D12
Door Courtesy SW
(Front Passenger' s
Side)
D11
Door Courtesy SW
(Driver' s Side)
Inside of the
Access Door RH
Inside of the
Access Door LH
Combination
Meter<29–2>
Transponder Key
ECU<4–20><5–20>
J 1
Junction
Connector
Left Kick
Panel
50A AM1
50A J/B
140A ALT (*1)
120A ALT (*2)
Battery
7. 5A ECU–B
Short Pin
7. 5A DOME
* 1 : w/ Trailer Towing
* 2 : w/o Trailer Towing
* 3 : Double Cab
* 4 : Access Cab
* 5 : Regular Cab
* 6 : w/ Automatic Glare–Resistant EC Mirror

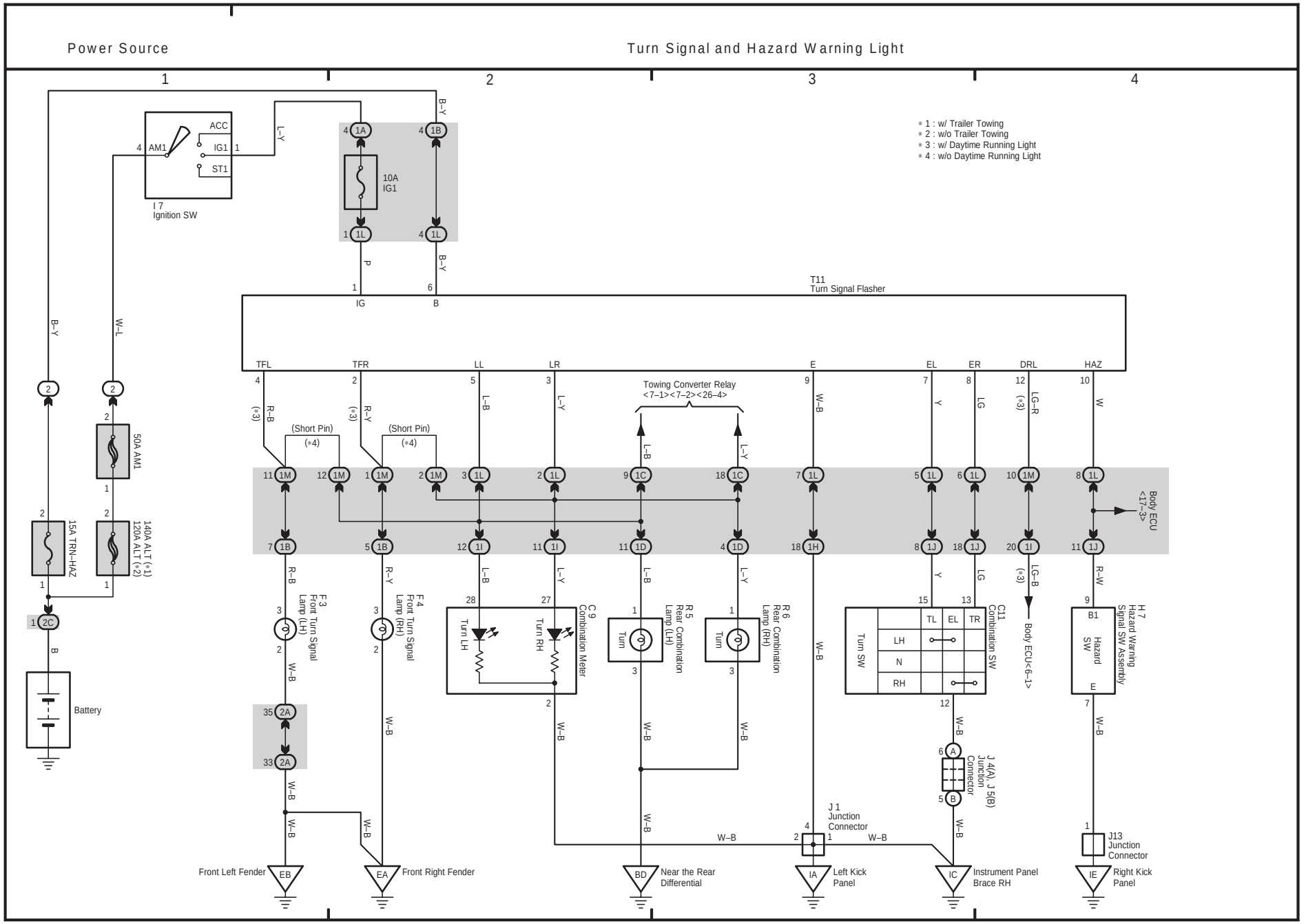
Power Source
Turn Signal and Hazard Warning Light
1
2
3
4
* 1 : w/ Trailer Towing
* 2 : w/o Trailer Towing
* 3 : w/ Daytime Running Light
* 4 : w/o Daytime Running Light
ACC
AM1
IG1
ST1
I 7
Ignition SW
10A
IG1
T11
Turn Signal Flasher
IG
B
TFL
TFR
LL
LR
E
EL
ER
DRL
HAZ
Towing Converter Relay
<7–1><7–2><26–4>
(Short Pin)
(*4)
50A AM1
15A TRN–HAZ
140A ALT (*1)
120A ALT (*2)
Battery
F3
Front Turn Signal Lamp (LH)
F4
Front Turn Signal Lamp (RH)
C9
Combination Meter
Turn LH
Turn RH
R5
Rear Combination Lamp (LH)
R6
Rear Combination Lamp (RH)
Turn
C11
Combination SW
Turn SW
LH
N
RH
TL
EL
TR
Body ECU
<1–3>
Body ECU<6–1>
H7
Hazard Warning Signal SW Assembly
Hazard SW
J 1
Junction Connector
J 4(A), J 5(B)
Junction Connector
J13
Junction Connector
Front Left Fender
EB
Front Right Fender
EA
BD
Near the Rear Differential
IA
Left Kick Panel
IC
Instrument Panel Brace RH
IE
Right Kick Panel

12 TOYOTA TACOMA

(Cont. next page)

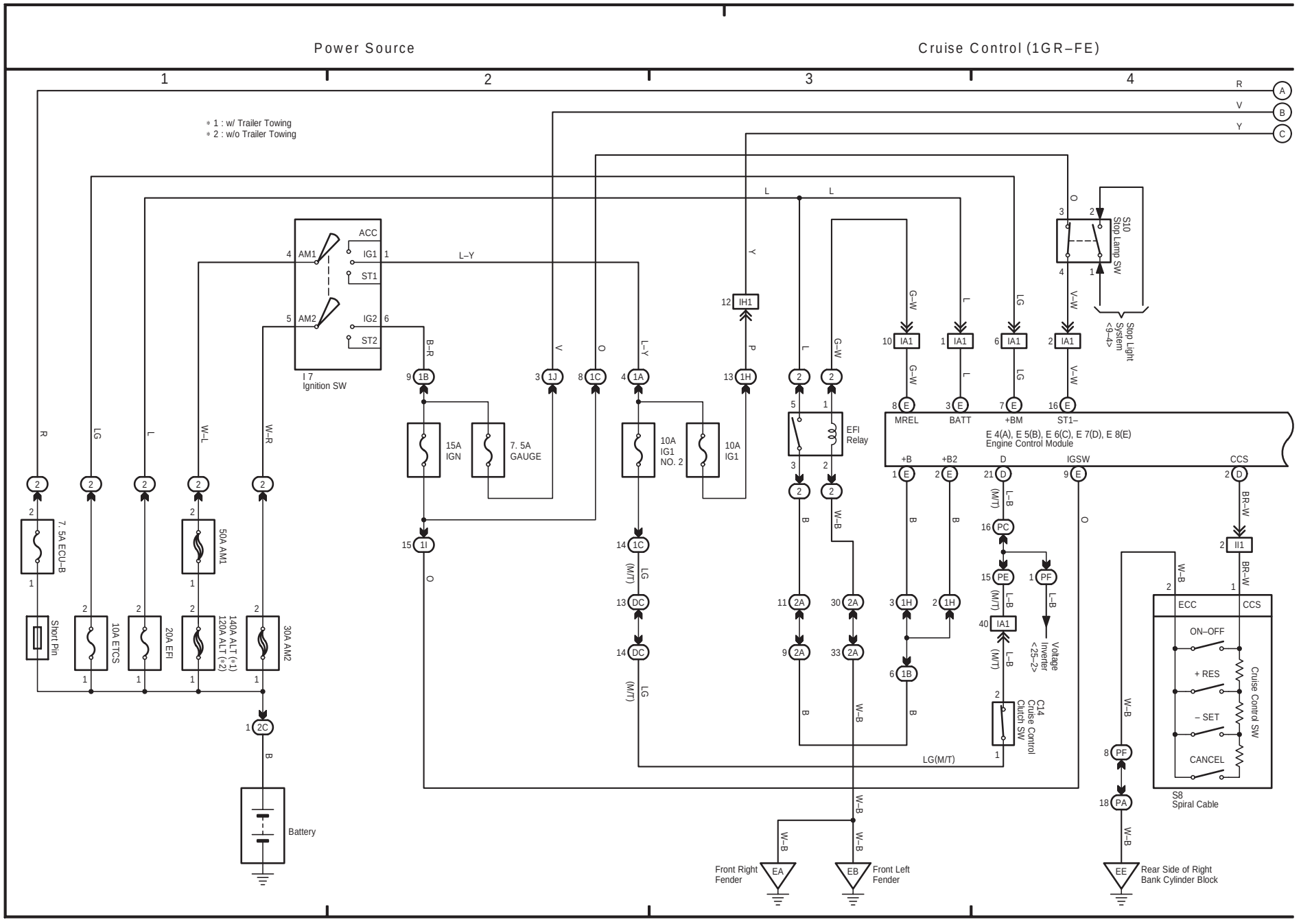

(Cont. next page)

Electronically Controlled Transmission and A/T Indicator (1GR–FE)

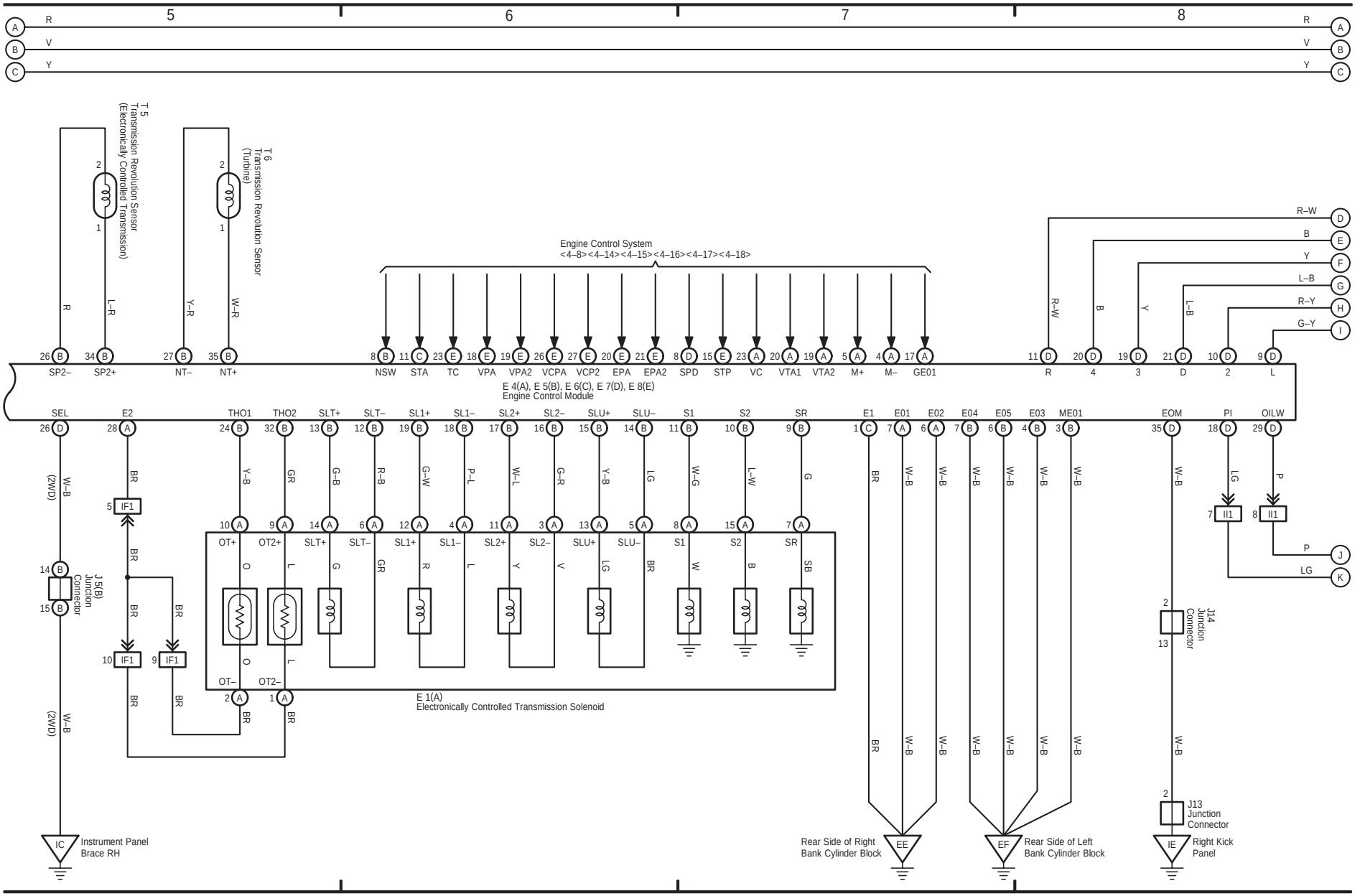

12 TOYOTA TACOMA (Cont' d)

Electronically Controlled Transmission and A/T Indicator (1GR–FE)

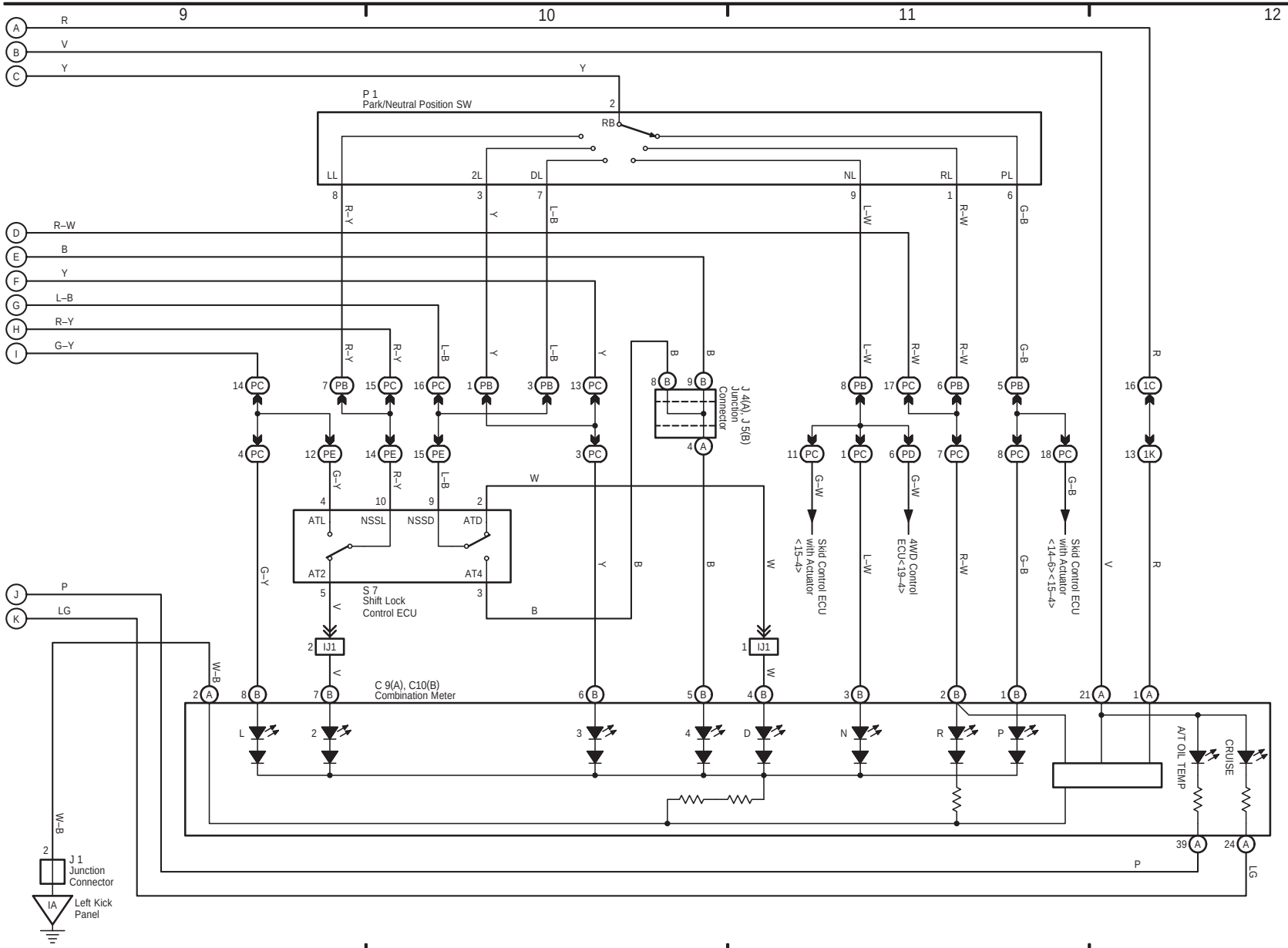

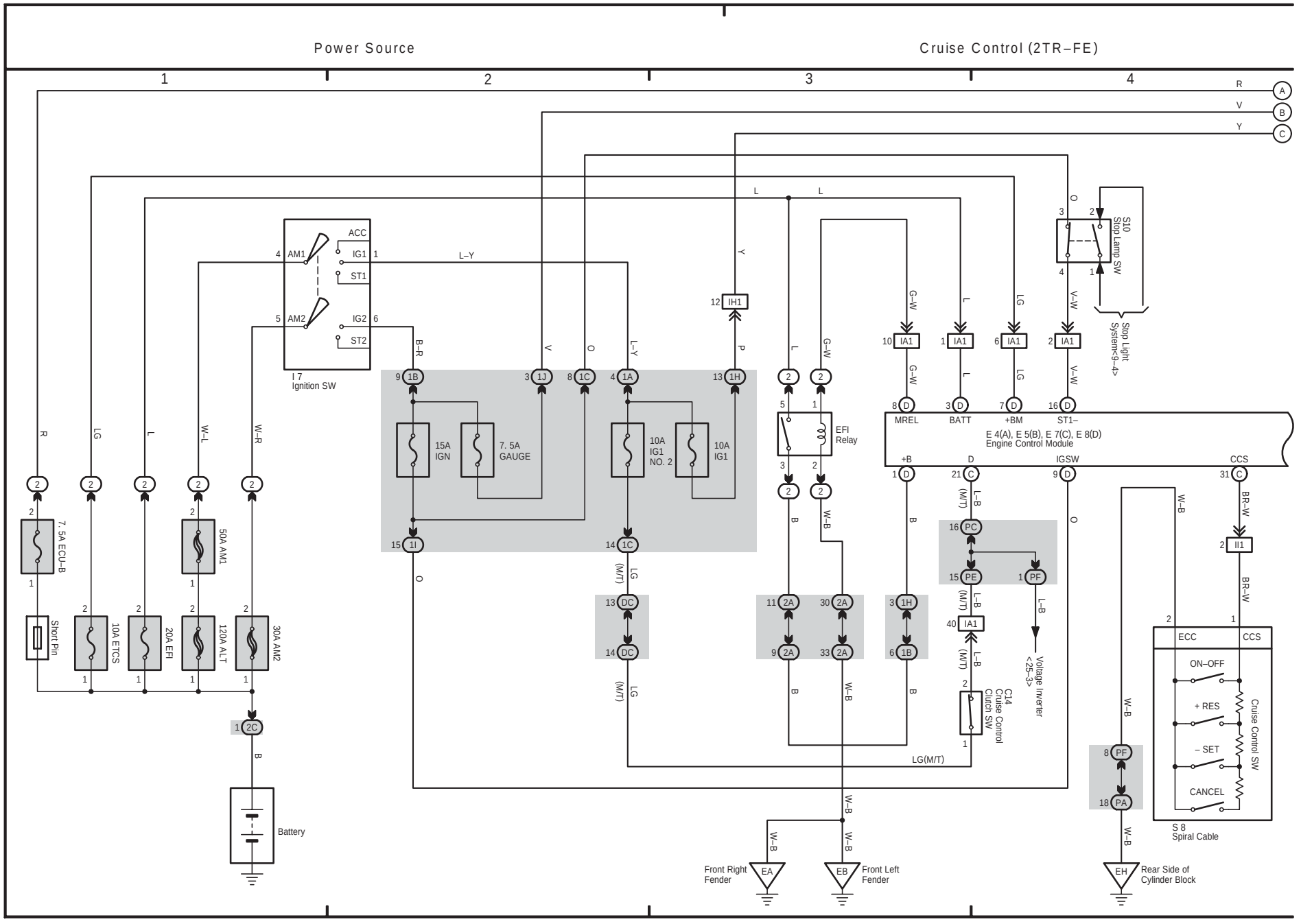

(Cont. next page)

(Cont. next page)

Electronically Controlled Transmission and A/T Indicator (2TR–FE)

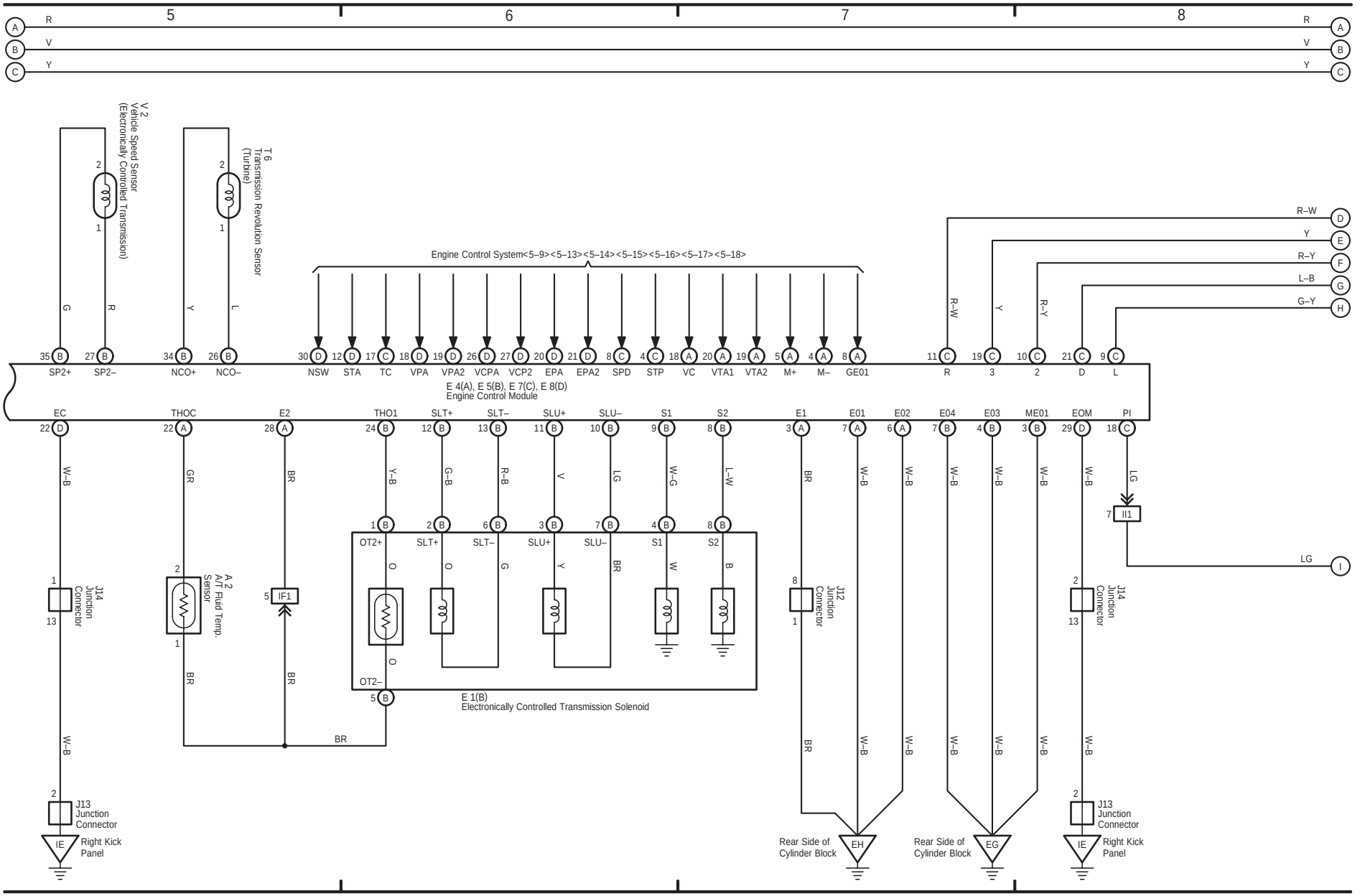

13 TOYOTA TACOMA (Cont' d)

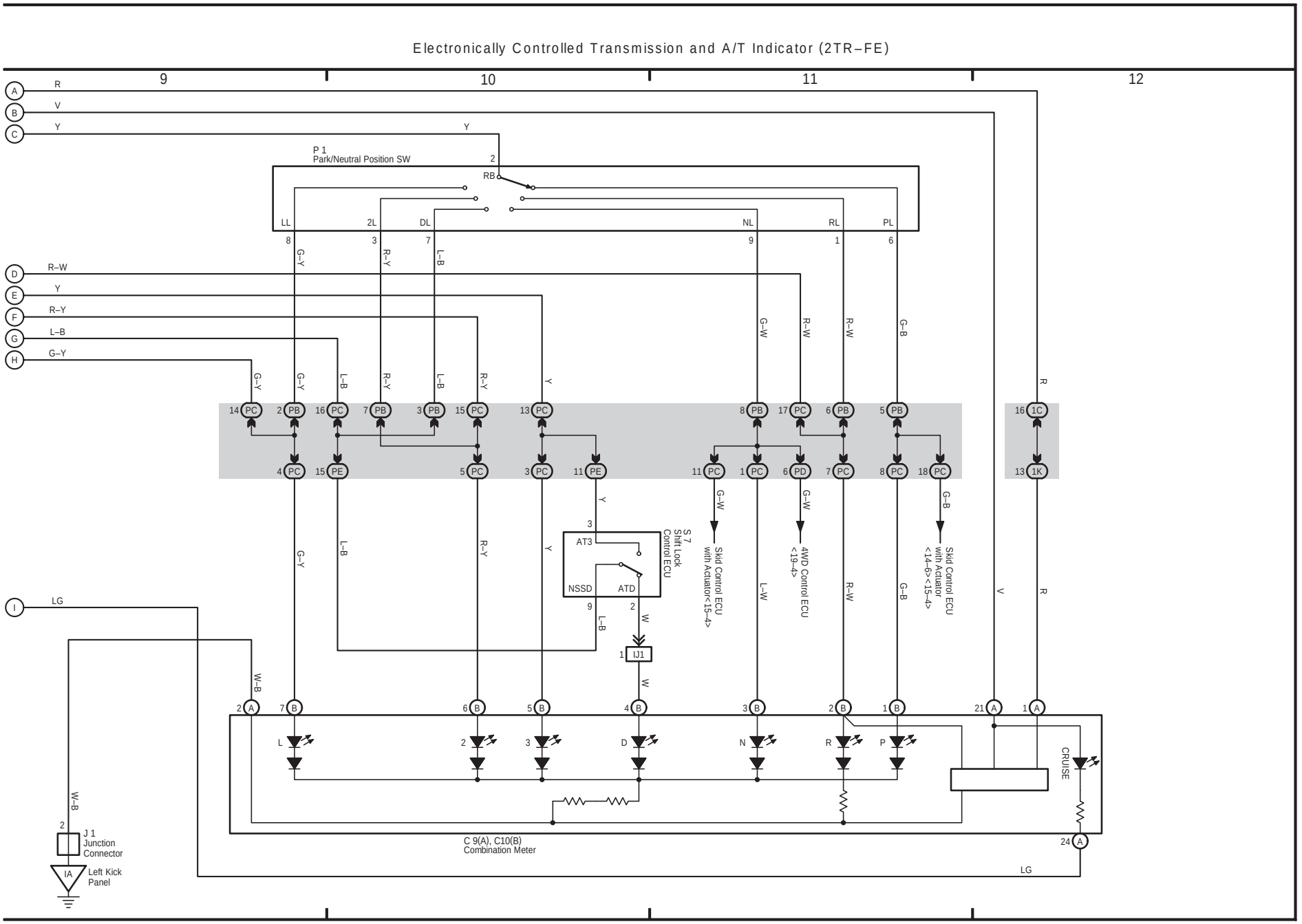

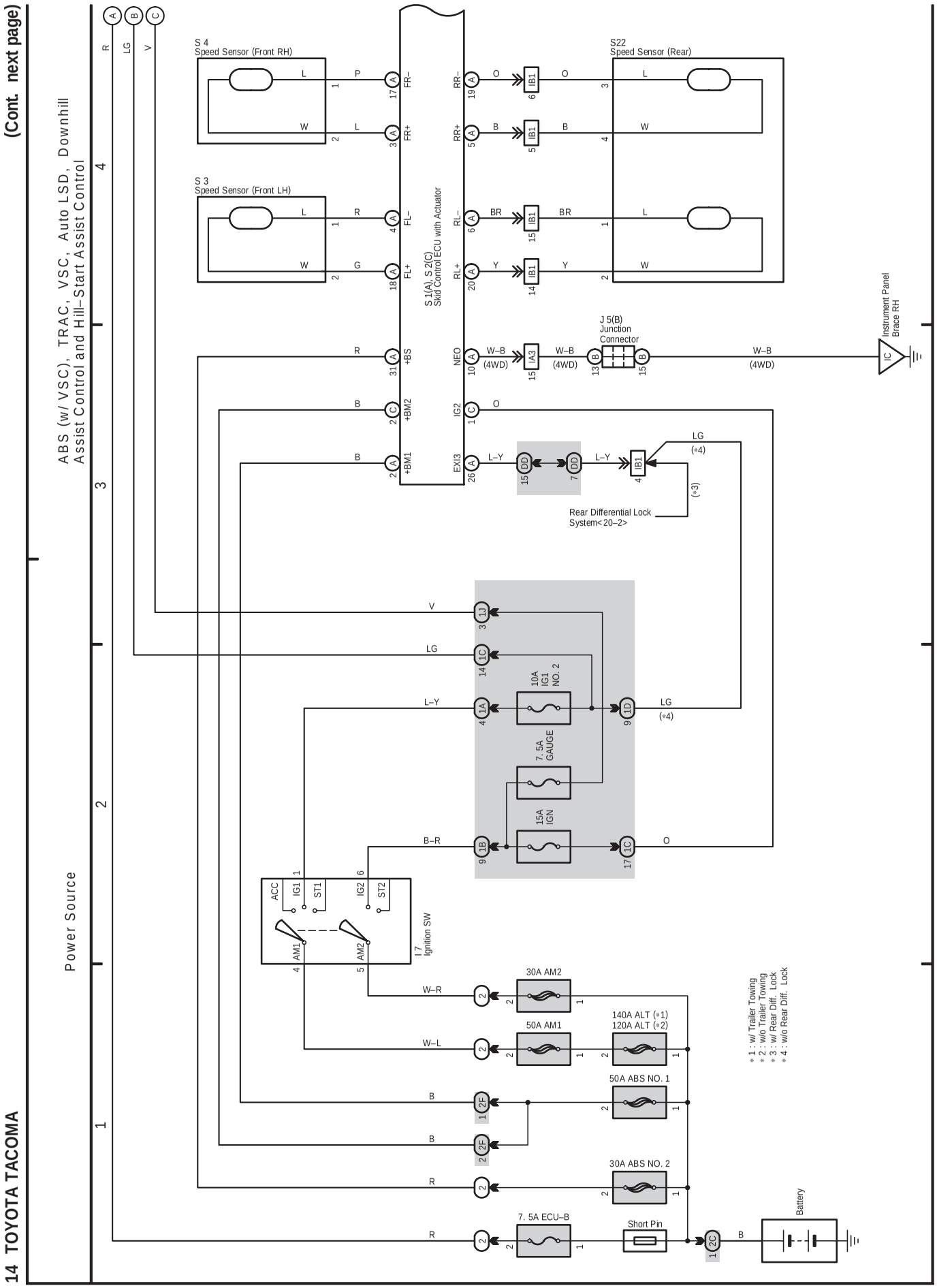
(Cont. next page)
ABS (w/ VSC), TRAC, VSC, Auto LSD, Downhill Assist Control and Hill–Start Assist Control
Power Source
14 TOYOTA TACOMA
S 4 Speed Sensor (Front RH)
S 3 Speed Sensor (Front LH)
S22 Speed Sensor (Rear)
S 1(A), S 2(C) Skid Control ECU with Actuator
J 5(B) Junction Connector
Instrument Panel Brace RH
Rear Differential Lock System< 20–2>
10A IG1 NO. 2
7. 5A GAUGE
15A IGN
I 7 Ignition SW
30A AM2
50A AM1
140A ALT (*1) 120A ALT (*2)
50A ABS NO. 1
30A ABS NO. 2
7. 5A ECU–B
Short Pin
Battery
(4WD)
* 1 : w/ Trailer Towing
* 2 : w/o Trailer Towing
* 3 : w/ Rear Diff. Lock
* 4 : w/o Rear Diff. Lock

(Cont. next page)

ABS (w/ VSC), TRAC, VSC, Auto LSD, Downhill Assist Control and Hill–Start Assist Control

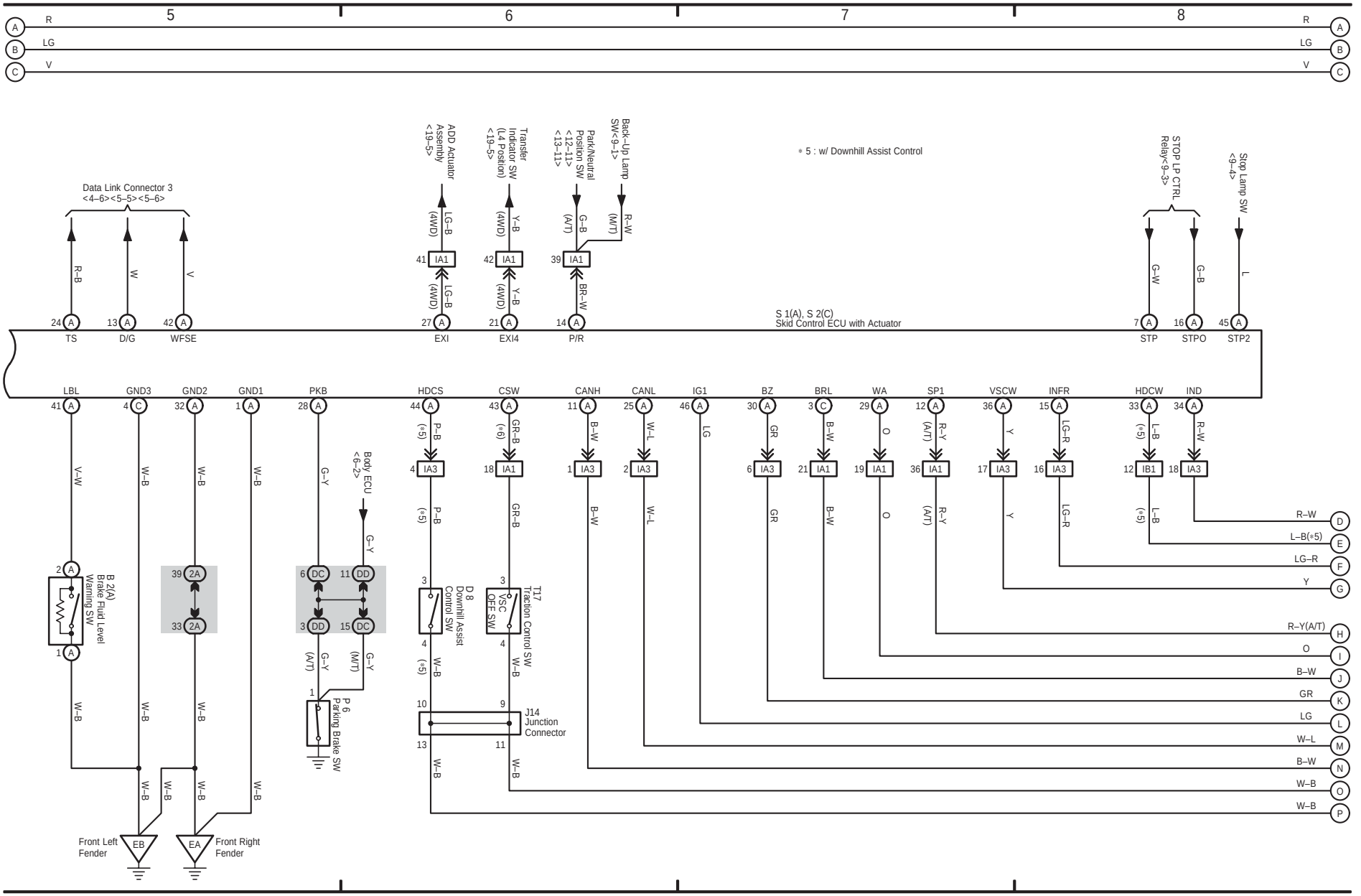

14 TOYOTA TACOMA (Cont' d)

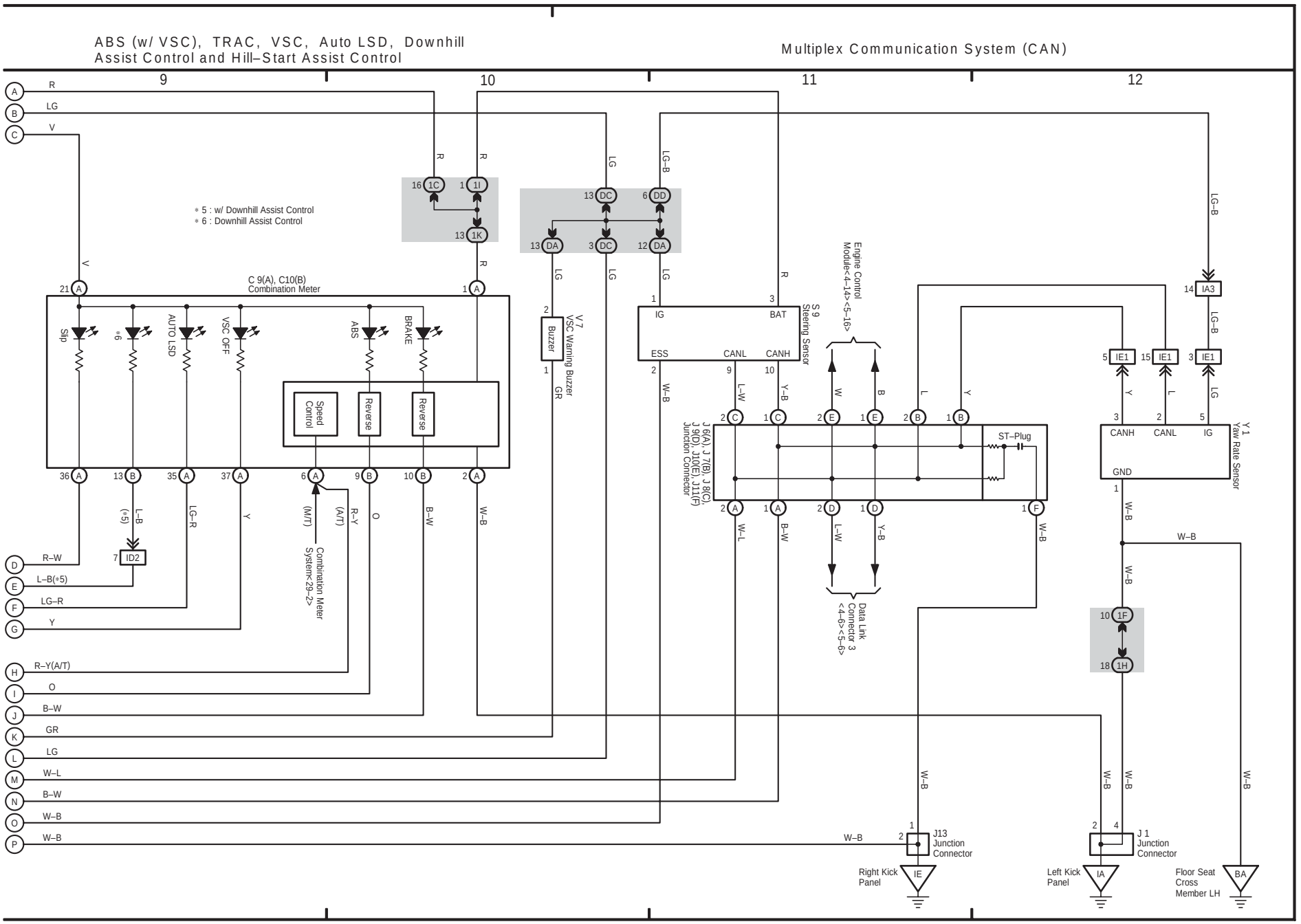

(Cont. next page)

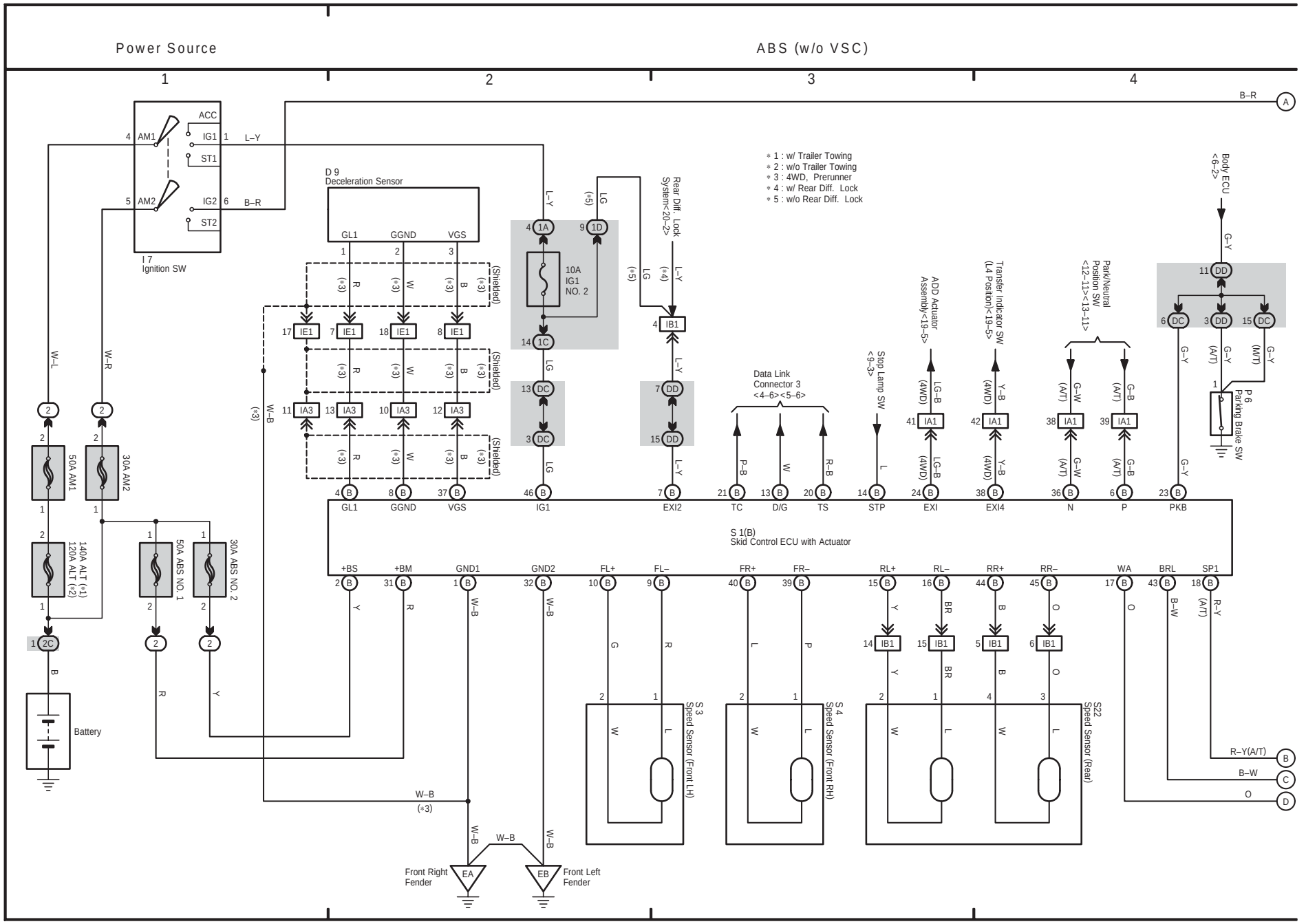

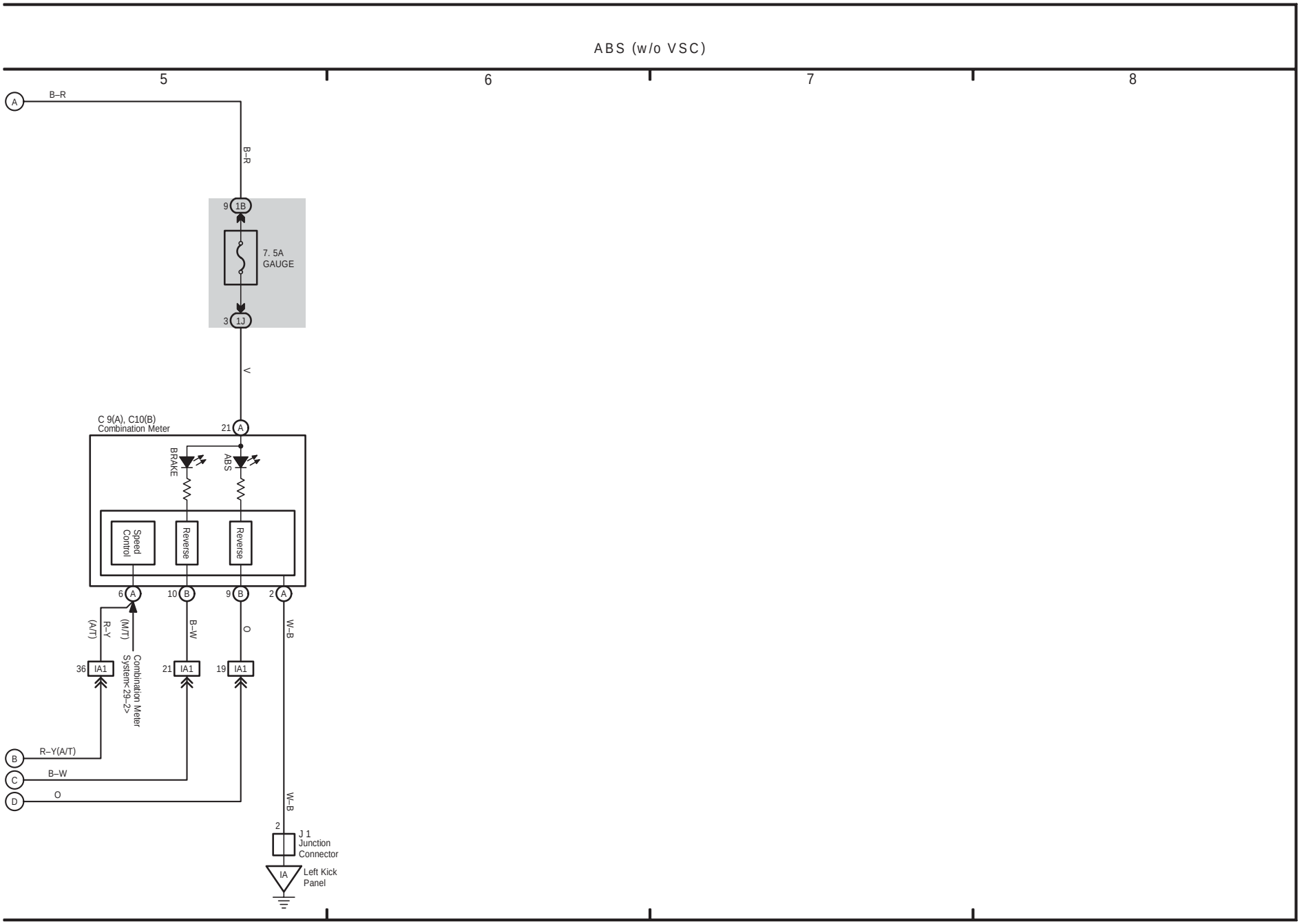
ABS (w/o VSC)
5
6
7
8
A
B–R
B–R
9 1B
7. 5A
GAUGE
3 1J
V
C 9(A), C10(B)
Combination Meter
21 A
BRAKE
ABS
Speed
Control
Reverse
Reverse
6 A
10 B
9 B
2 A
R–Y
(A/T)
(M/T)
B–W
O
W–B
36 IA1
21 IA1
19 IA1
Combination Meter
System<29–2>
B
C
D
R–Y(A/T)
B–W
O
W–B
2
J 1
Junction
Connector
IA
Left Kick
Panel

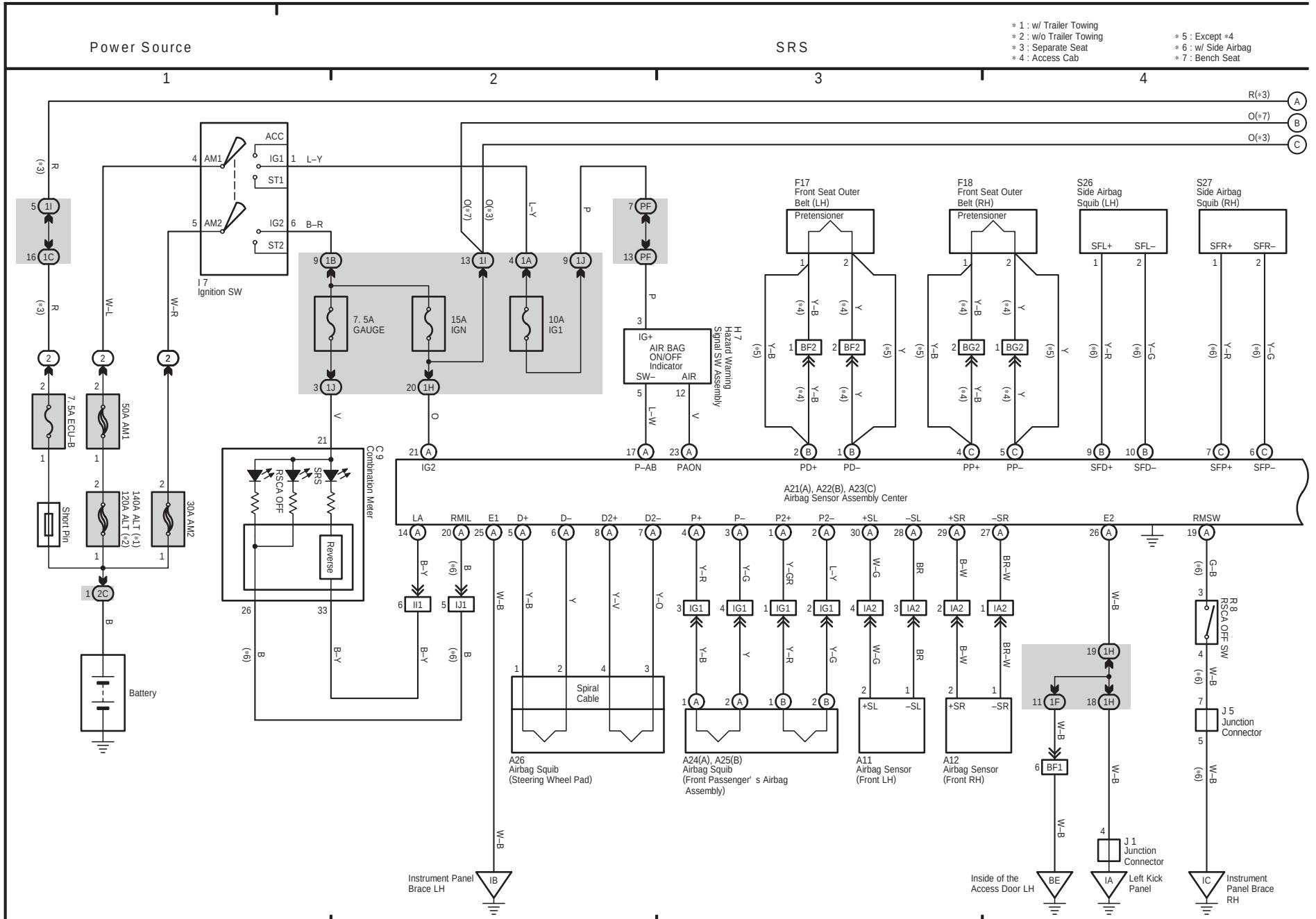
Power Source
SRS
1
2
3
4
* 1 : w/ Trailer Towing
* 2 : w/o Trailer Towing
* 3 : Separate Seat
* 4 : Access Cab
* 5 : Except *4
* 6 : w/ Side Airbag
* 7 : Bench Seat
I 7
Ignition SW
ACC
IG1
ST1
IG2
ST2
AM1
AM2
7. 5A GAUGE
15A IGN
10A IG1
7. 5A ECU–B
50A AM1
140A ALT (*1)
120A ALT (*2)
30A AM2
Short Pin
Battery
C 9
Combination Meter
RSCA OFF
SRS
Reverse
H 7
Hazard Warning Signal SW Assembly
AIR BAG ON/OFF Indicator
SW–
AIR
IG+
F17
Front Seat Outer Belt (LH)
Pretensioner
F18
Front Seat Outer Belt (RH)
Pretensioner
S26
Side Airbag Squib (LH)
SFL+
SFL–
S27
Side Airbag Squib (RH)
SFR+
SFR–
A21(A), A22(B), A23(C)
Airbag Sensor Assembly Center
IG2
P–AB
PAON
PD+
PD–
PP+
PP–
SFD+
SFD–
SFP+
SFP–
LA
RMIL
E1
D+
D–
D2+
D2–
P+
P–
P2+
P2–
+SL
–SL
+SR
–SR
E2
RMSW
Spiral Cable
A26
Airbag Squib
(Steering Wheel Pad)
A24(A), A25(B)
Airbag Squib
(Front Passenger' s Airbag Assembly)
A11
Airbag Sensor
(Front LH)
A12
Airbag Sensor
(Front RH)
R 8
RSCA OFF SW
J 5
Junction Connector
J 1
Junction Connector
Instrument Panel Brace LH
IB
Inside of the Access Door LH
BE
Left Kick Panel
IA
Instrument Panel Brace RH
IC

(Cont. next page)

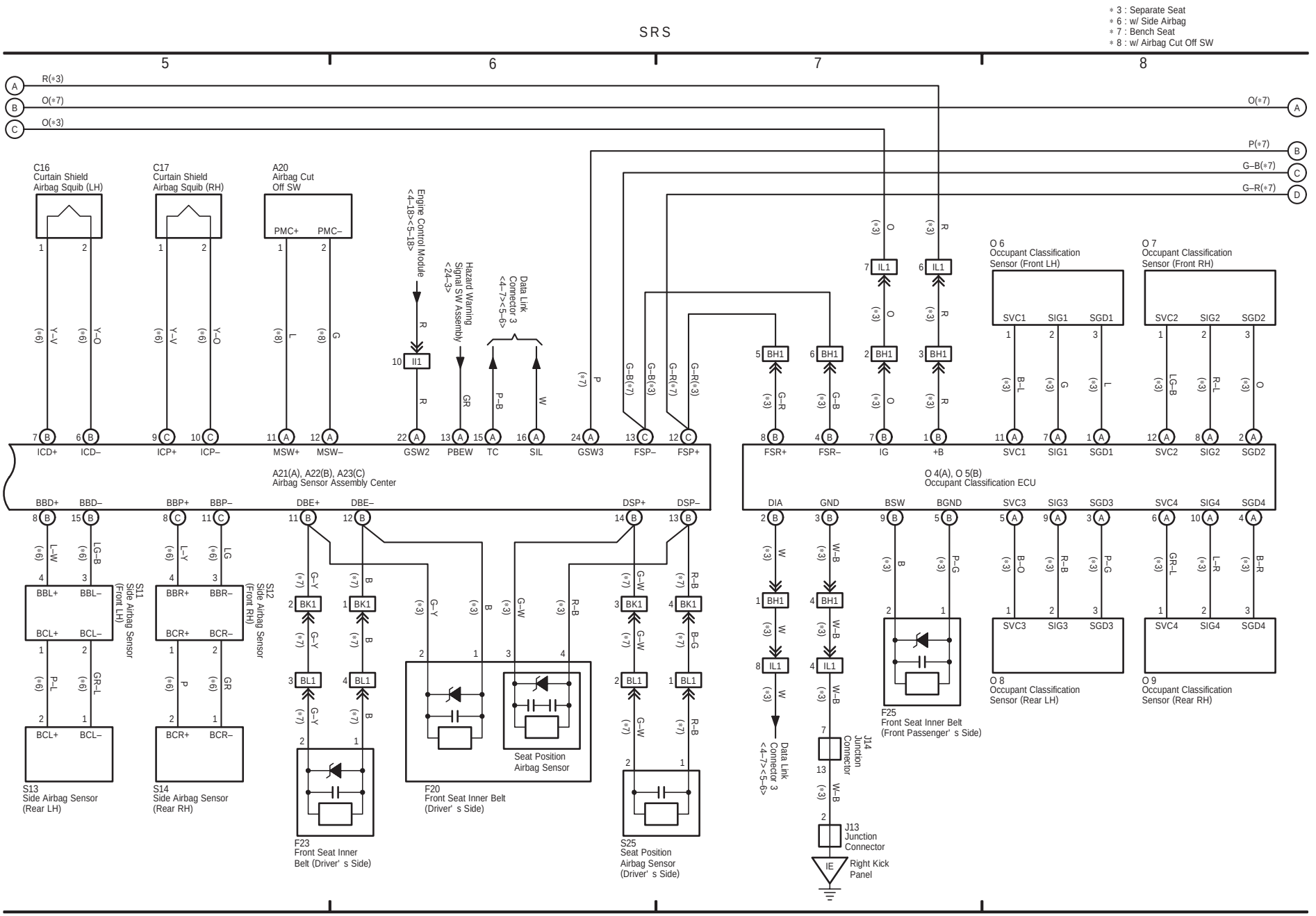

16 TOYOTA TACOMA(Cont' d)

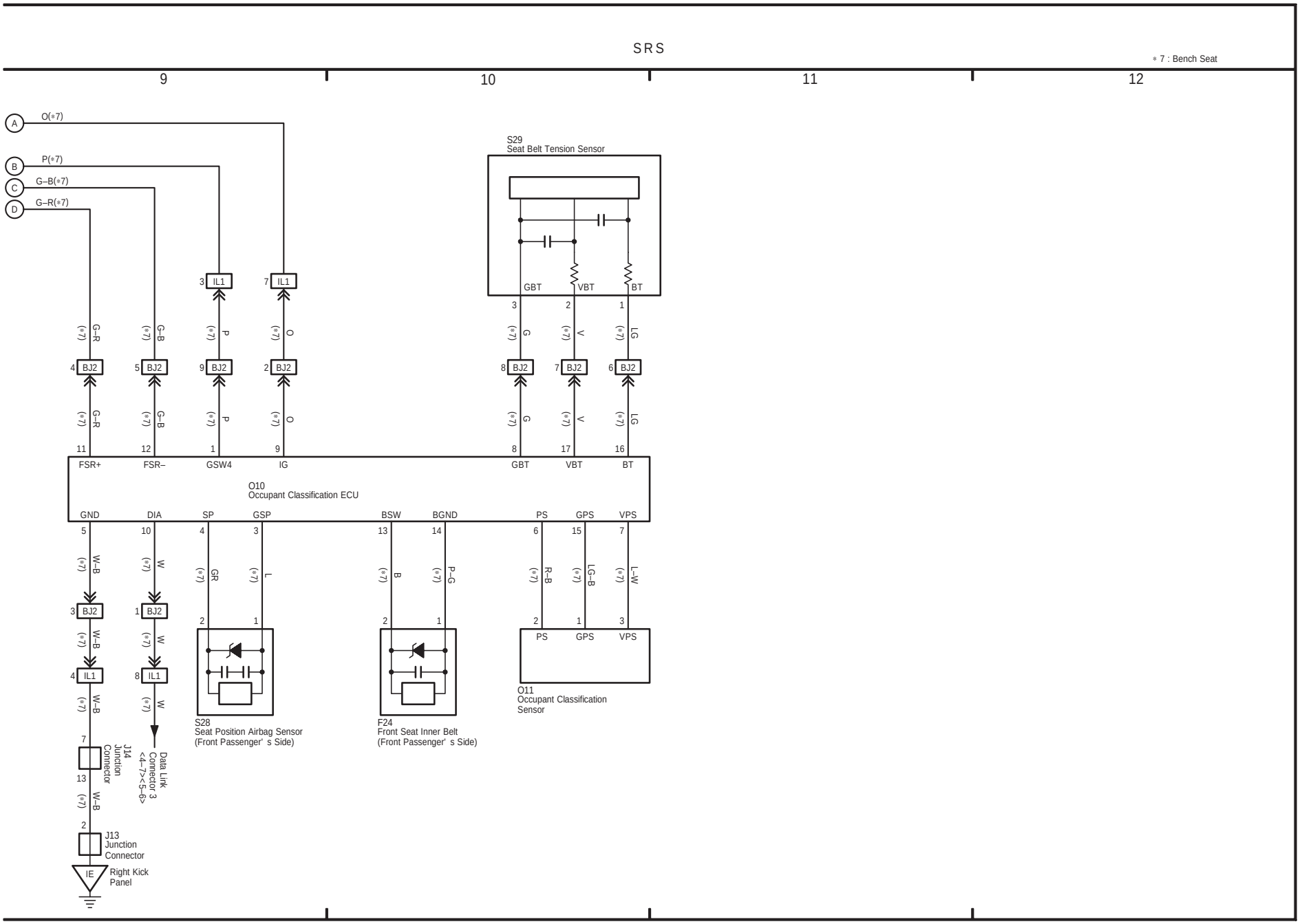

(Cont. next page)

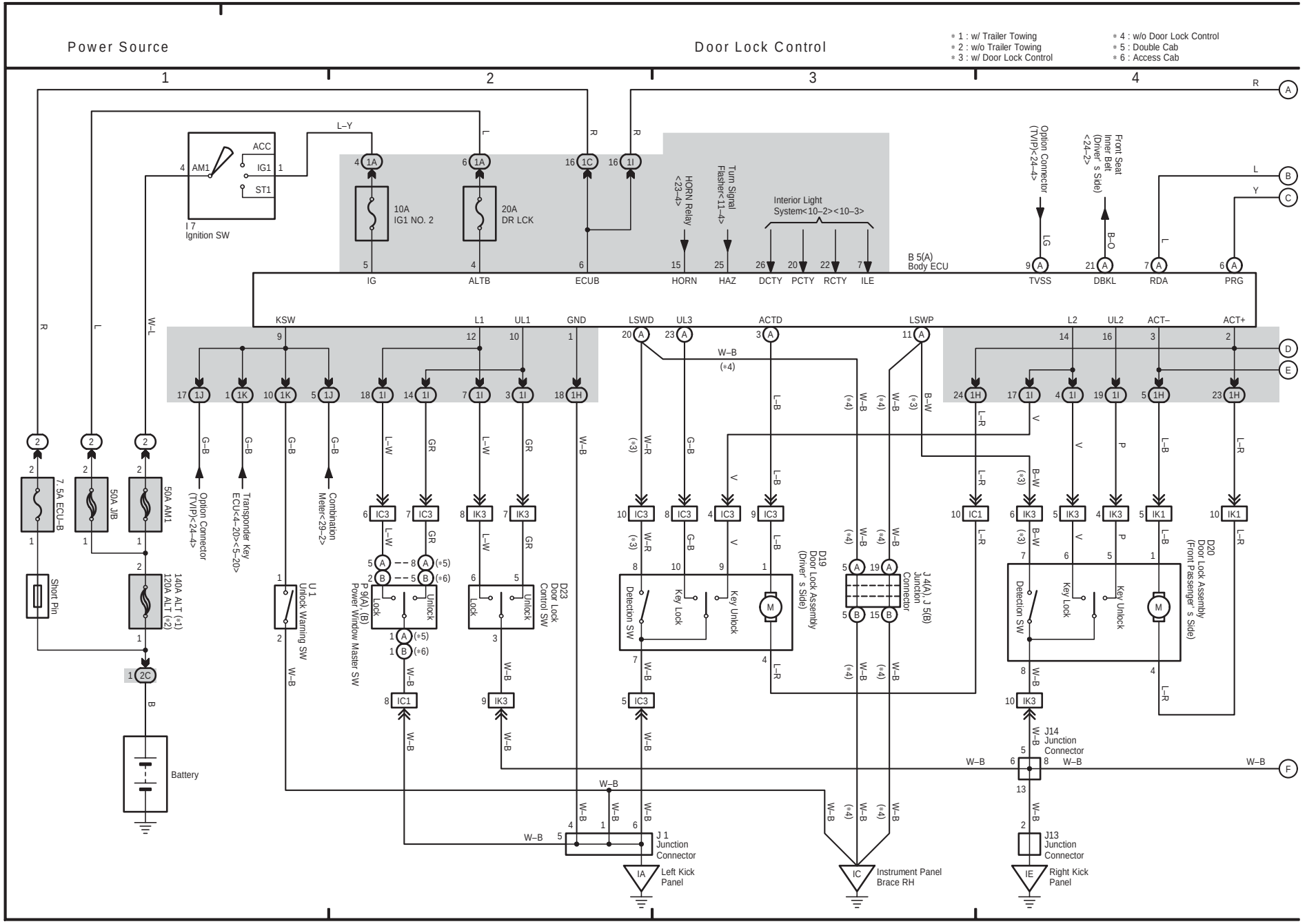

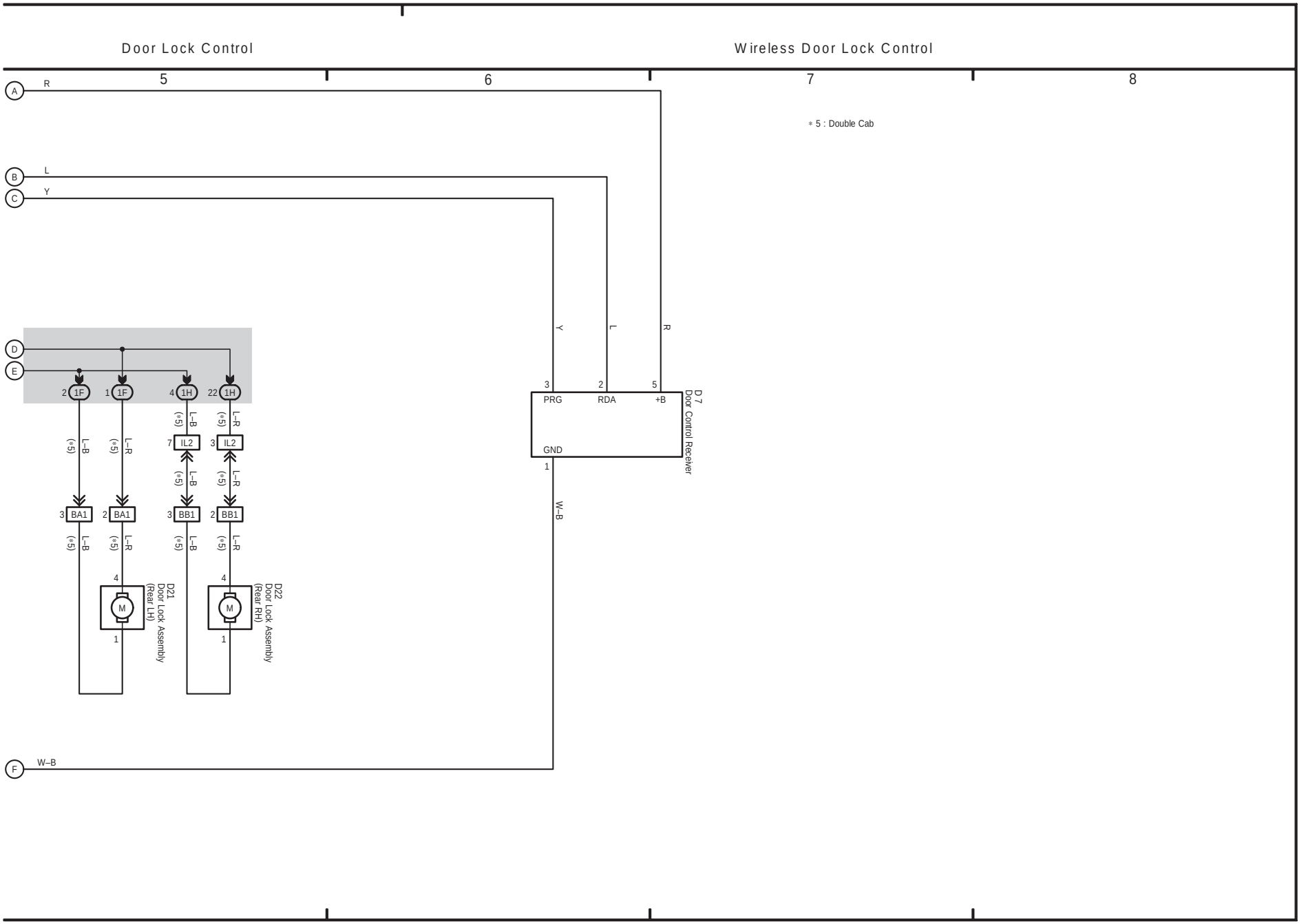
Door Lock Control
Wireless Door Lock Control
5
6
7
8
A
R
B
L
C
Y
D
E
F
W–B
* 5 : Double Cab
2 1F
1 1F
4 1H
22 1H
(*5) L–B
(*5) L–R
7 IL2
3 IL2
3 BA1
2 BA1
3 BB1
2 BB1
4
M
1
D21 Door Lock Assembly (Rear LH)
D22 Door Lock Assembly (Rear RH)
3 PRG
2 RDA
5 +B
GND
1
D 7 Door Control Receiver

18 TOYOTA TACOMA

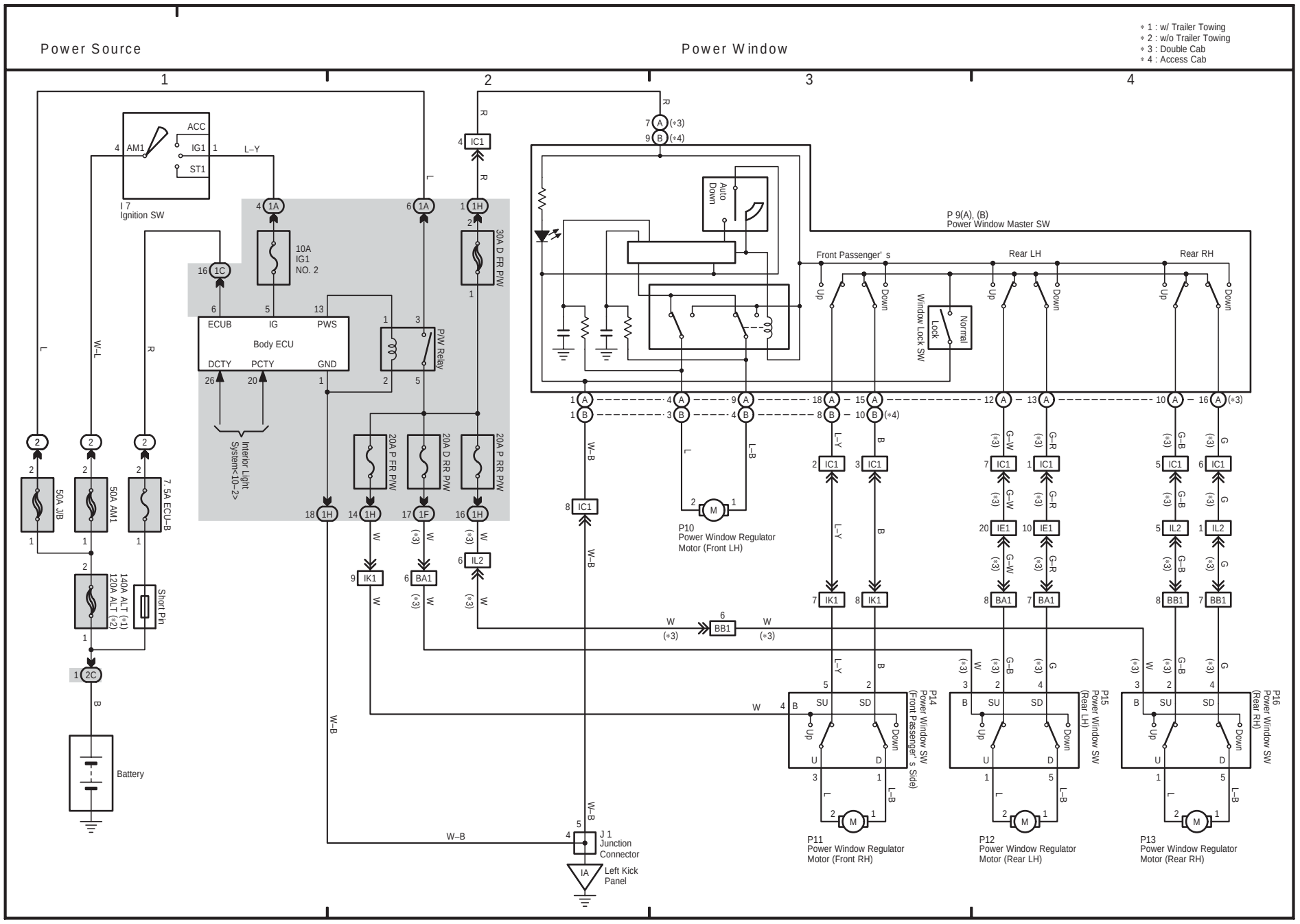

19 TOYOTA TACOMA

(Cont. next page)

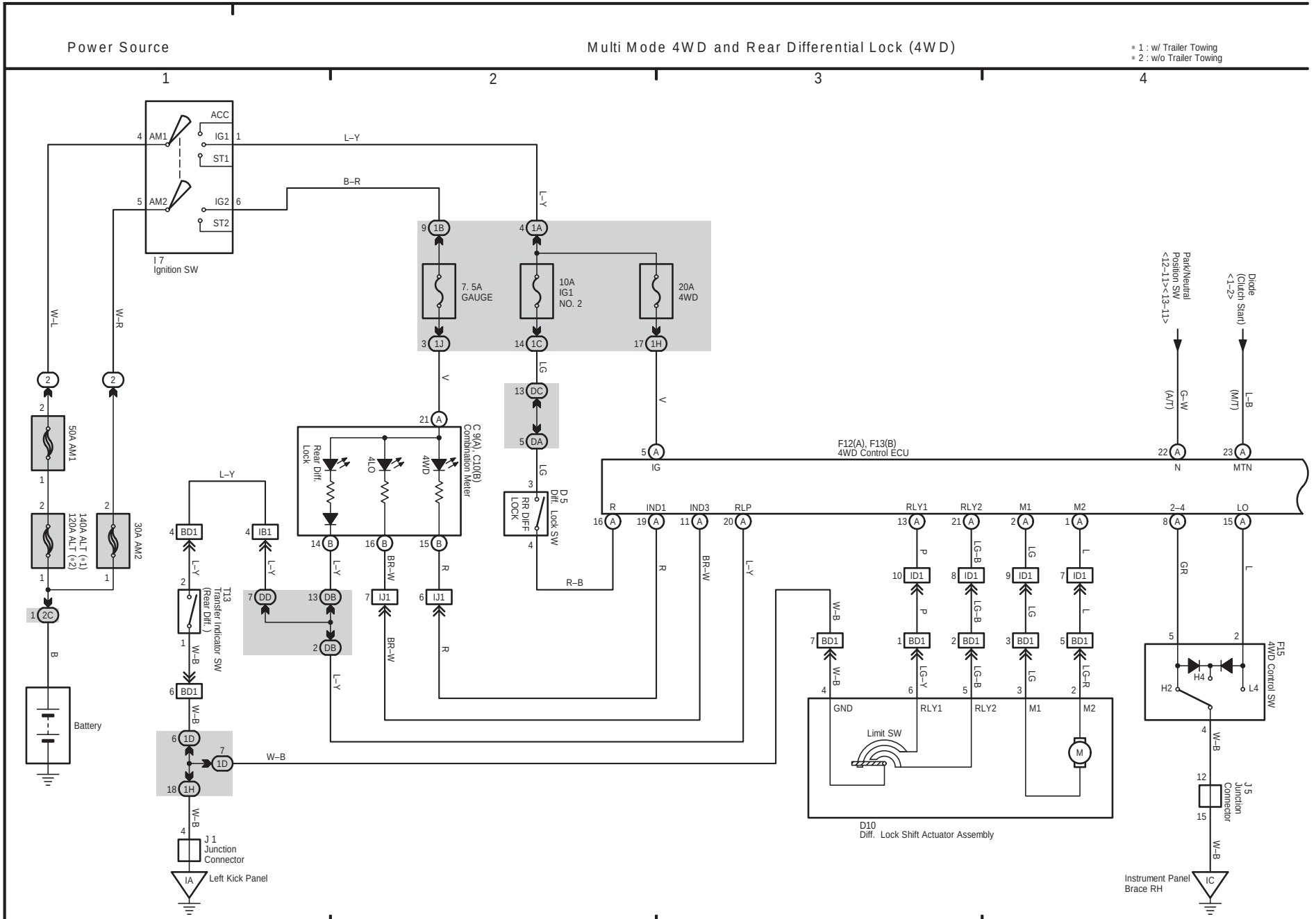

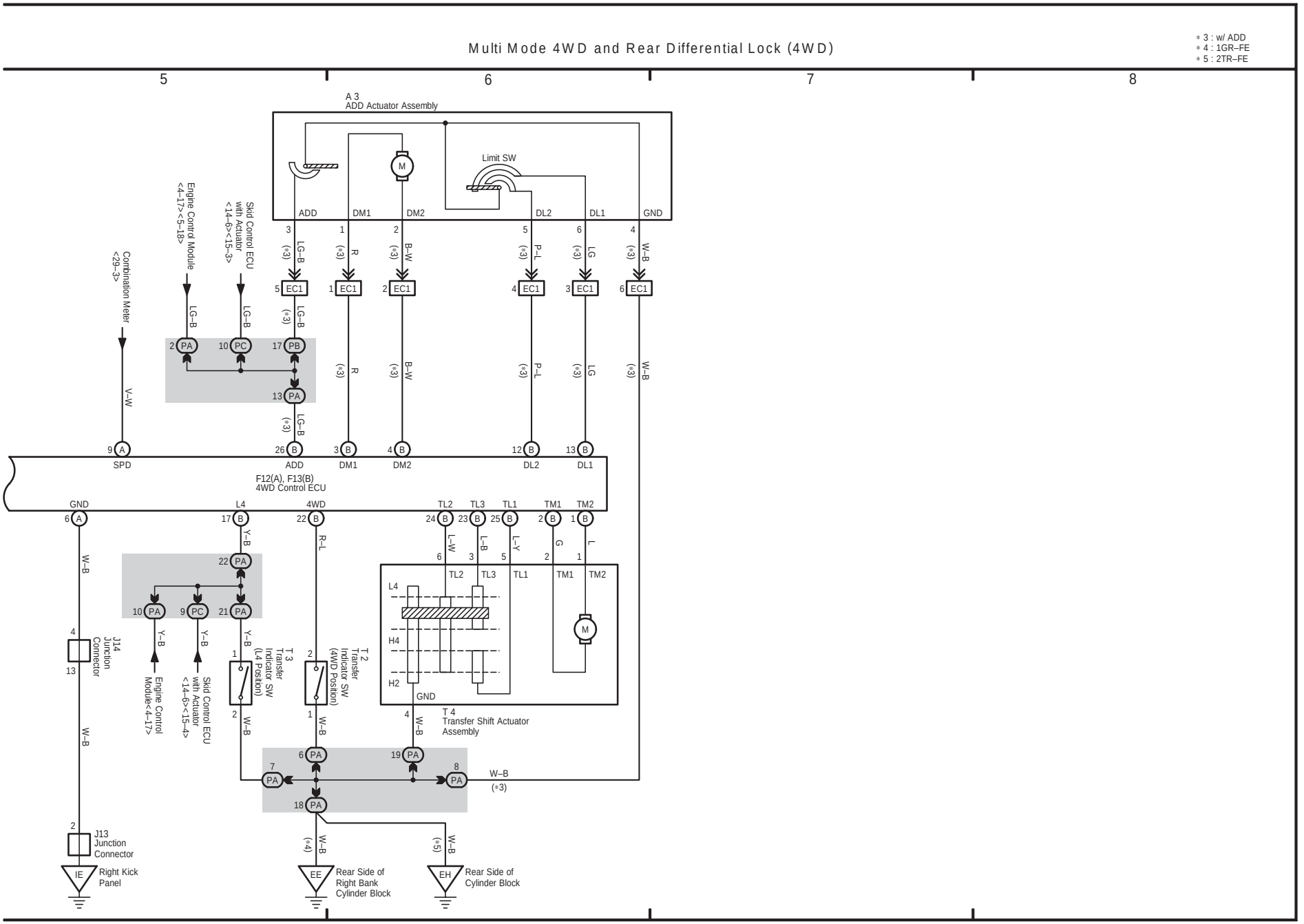
Multi Mode 4WD and Rear Differential Lock (4WD)
* 3 : w/ ADD
* 4 : 1GR–FE
* 5 : 2TR–FE
5
6
7
8
A 3
ADD Actuator Assembly
M
Limit SW
ADD
DM1
DM2
DL2
DL1
GND
Engine Control Module <4–17><5–18>
Skid Control ECU with Actuator <14–6><15–3>
Combination Meter <29–3>
LG–B
R
B–W
P–L
LG
W–B
Y–W
EC1
PA
PC
PB
SPD
F12(A), F13(B)
4WD Control ECU
L4
4WD
TL2
TL3
TL1
TM1
TM2
R–L
L–W
L–B
L–Y
G
L
Y–B
H4
H2
T 3
Transfer Indicator SW (L4 Position)
T 2
Transfer Indicator SW (4WD Position)
T 4
Transfer Shift Actuator Assembly
J14
Junction Connector
J13
Junction Connector
Engine Control Module<4–17>
Skid Control ECU with Actuator <14–6><15–4>
IE
Right Kick Panel
EE
Rear Side of Right Bank Cylinder Block
EH
Rear Side of Cylinder Block
W–B
(*3)
(*4)
(*5)

20 TOYOTA TACOMA

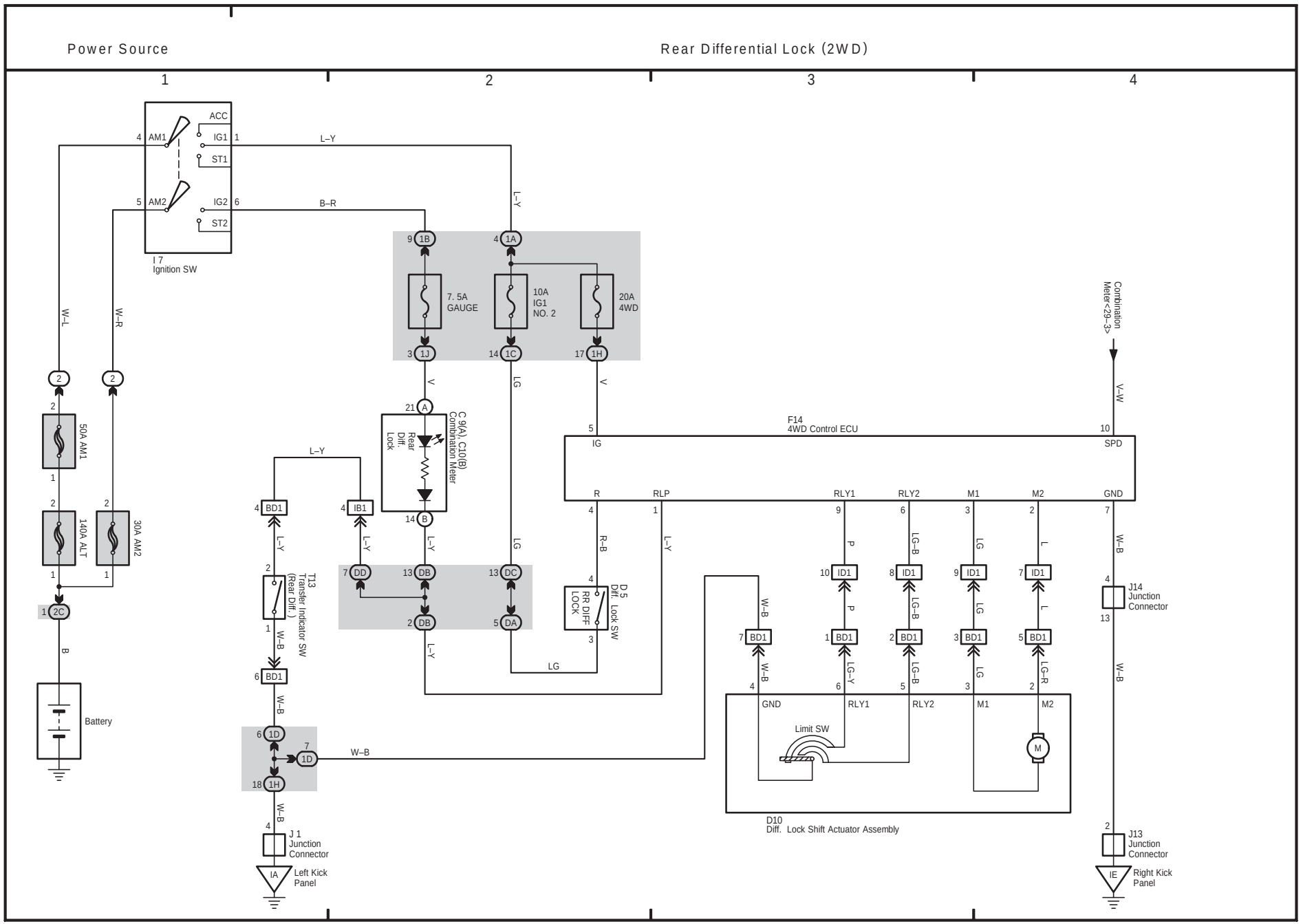

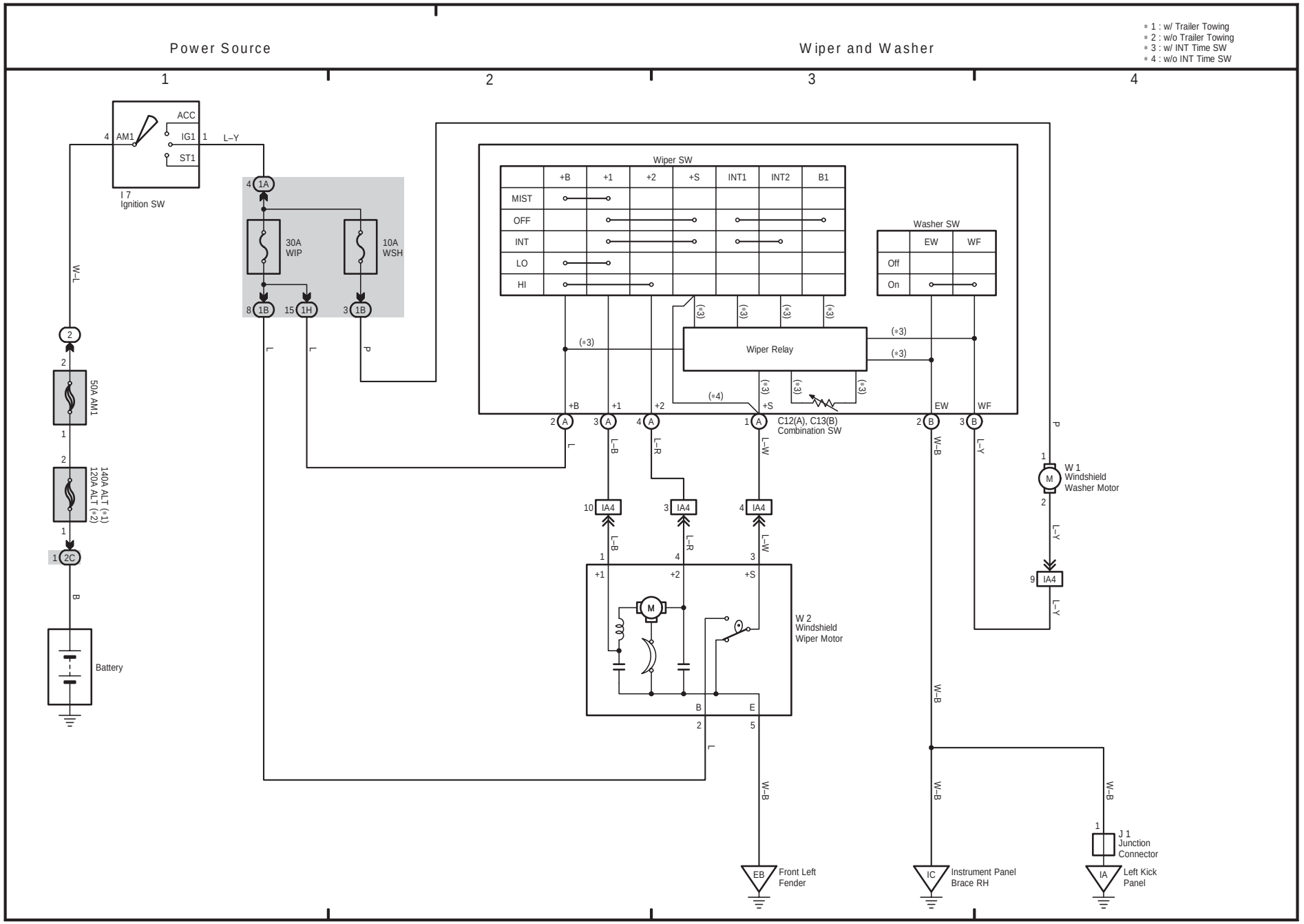
Power Source
Wiper and Washer
1
2
3
4
* 1 : w/ Trailer Towing
* 2 : w/o Trailer Towing
* 3 : w/ INT Time SW
* 4 : w/o INT Time SW
ACC
AM1
IG1
ST1
L–Y
I 7
Ignition SW
30A
WIP
10A
WSH
W–L
50A AM1
140A ALT (*1)
120A ALT (*2)
Battery
Wiper SW
+B
+1
+2
+S
INT1
INT2
B1
MIST
OFF
INT
LO
HI
Wiper Relay
Washer SW
EW
WF
Off
On
C12(A), C13(B)
Combination SW
IA4
L–B
L–R
L–W
W–B
L–Y
P
L
W 1
Windshield
Washer Motor
W 2
Windshield
Wiper Motor
J 1
Junction
Connector
EB
Front Left
Fender
IC
Instrument Panel
Brace RH
IA
Left Kick
Panel

22 TOYOTA TACOMA

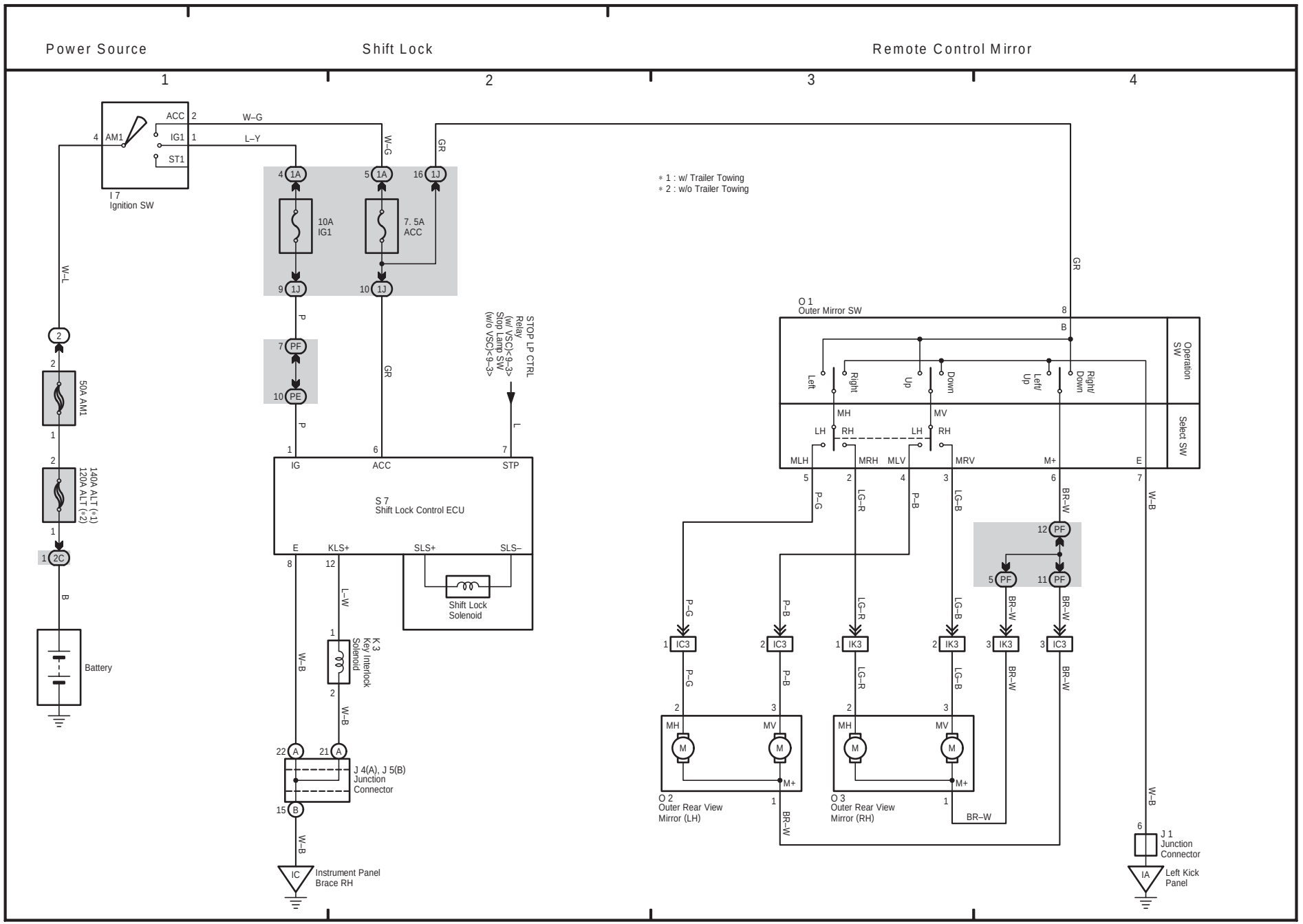

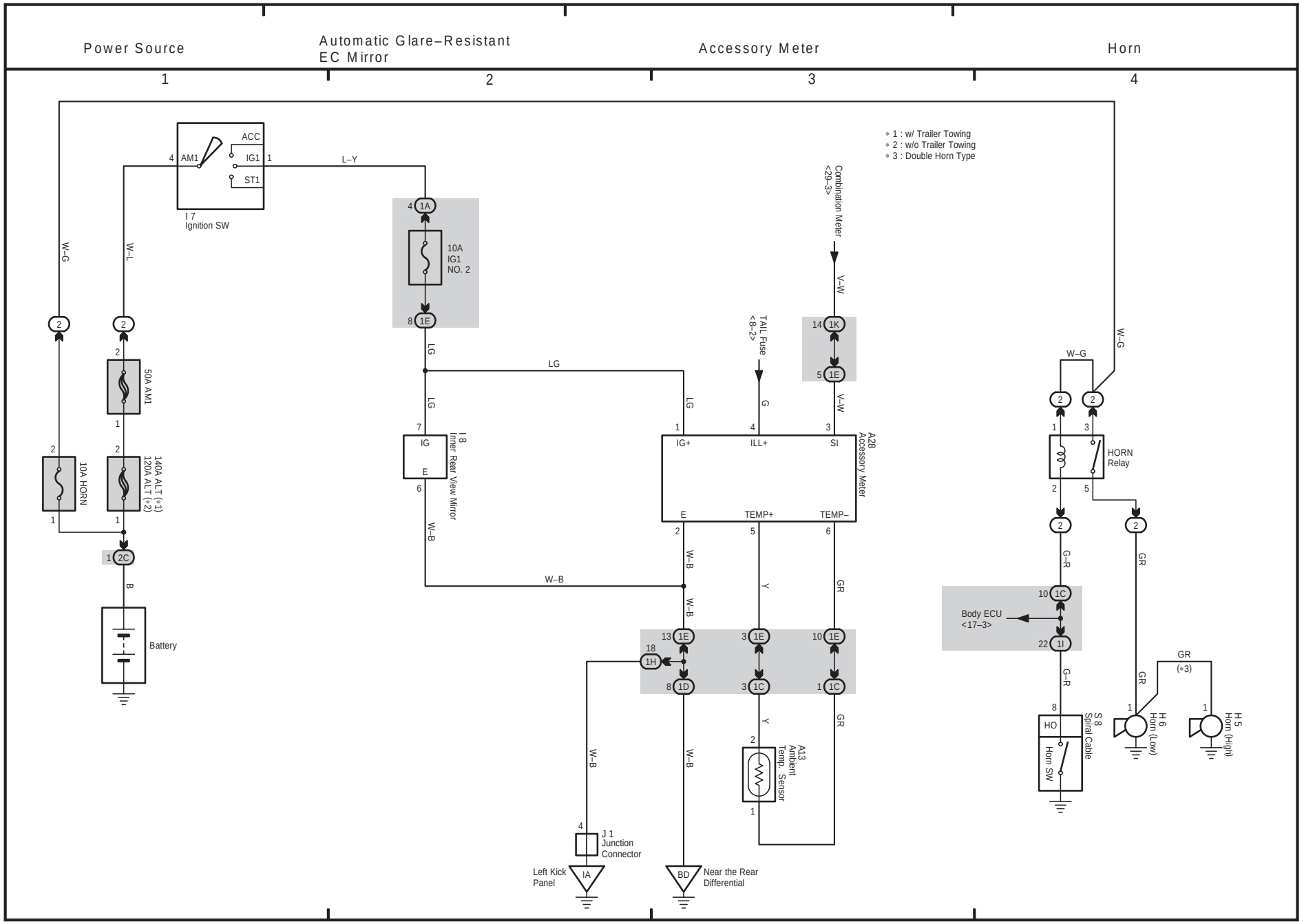
Power Source
Automatic Glare–Resistant EC Mirror
Accessory Meter
Horn
1
2
3
4
* 1 : w/ Trailer Towing
* 2 : w/o Trailer Towing
* 3 : Double Horn Type
ACC
AM1
IG1
ST1
I 7 Ignition SW
L–Y
10A IG1 NO. 2
50A AM1
10A HORN
140A ALT (*1) 120A ALT (*2)
Battery
W–G
W–L
B
LG
W–B
I 8 Inner Rear View Mirror
IG
E
Combination Meter <29–3>
V–W
TAIL Fuse <8–2>
G
A28 Accessory Meter
IG+
ILL+
SI
TEMP+
TEMP–
Y
GR
Body ECU <17–3>
G–R
HORN Relay
Horn SW
S 8 Spiral Cable
H 6 Horn (Low)
H 5 Horn (High)
A13 Ambient Temp. Sensor
J 1 Junction Connector
Left Kick Panel
Near the Rear Differential

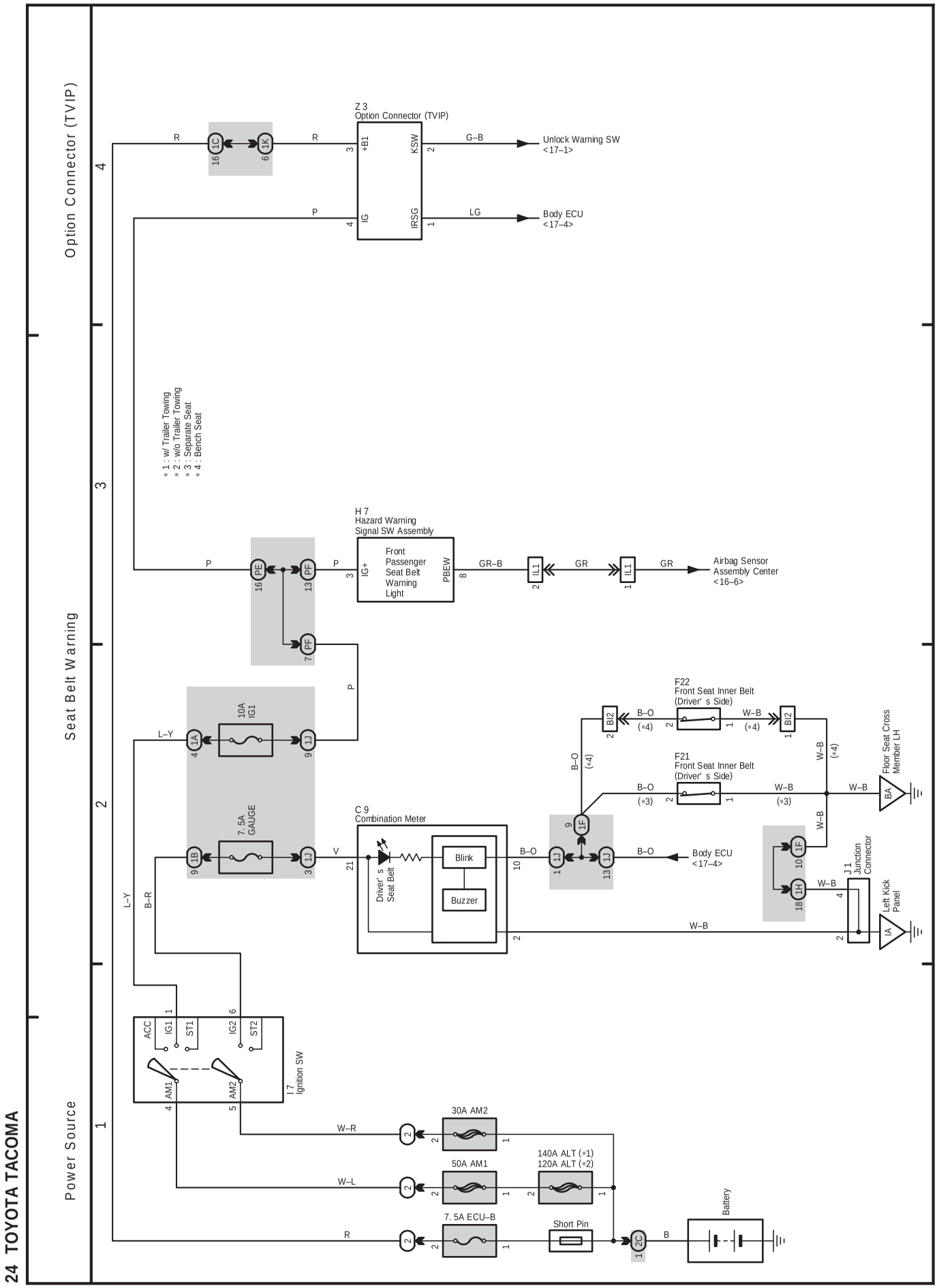
Option Connector (TVIP)
Seat Belt Warning
Power Source
Z 3
Option Connector (TVIP)
Unlock Warning SW
<17–1>
Body ECU
<17–4>
* 1 : w/ Trailer Towing
* 2 : w/o Trailer Towing
* 3 : Separate Seat
* 4 : Bench Seat
H 7
Hazard Warning
Signal SW Assembly
Front
Passenger
Seat Belt
Warning
Light
Airbag Sensor
Assembly Center
<16–6>
F22
Front Seat Inner Belt
(Driver' s Side)
F21
Front Seat Inner Belt
(Driver' s Side)
Floor Seat Cross
Member LH
C 9
Combination Meter
Blink
Buzzer
Driver' s
Seat Belt
Body ECU
<17–4>
J 1
Junction
Connector
Left Kick
Panel
10A
IG1
7. 5A
GAUGE
I 7
Ignition SW
ACC
IG1
ST1
IG2
ST2
AM1
AM2
30A AM2
50A AM1
140A ALT (*1)
120A ALT (*2)
7. 5A ECU–B
Short Pin
Battery

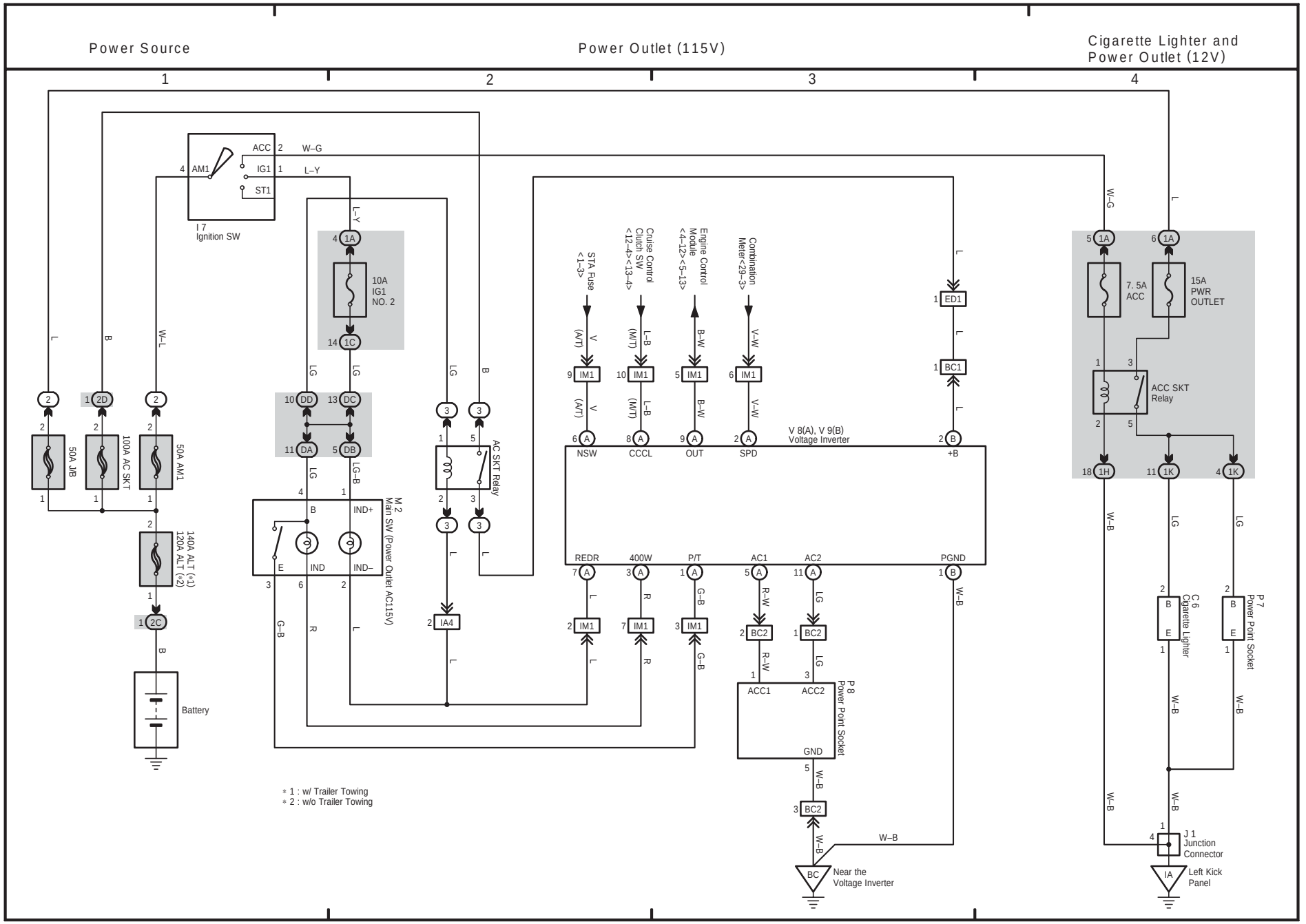
Power Source
Power Outlet (115V)
Cigarette Lighter and Power Outlet (12V)
1
2
3
4
I 7 Ignition SW
ACC
IG1
ST1
AM1
W–G
L–Y
10A IG1 NO. 2
50A J/B
100A AC SKT
50A AM1
140A ALT (*1) 120A ALT (*2)
Battery
M 2 Main SW (Power Outlet AC115V)
IND+
IND
IND–
AC SKT Relay
STA Fuse <1–3>
Cruise Control Clutch SW <12–4><13–4>
Engine Control Module <4–12><5–13>
Combination Meter<29–3>
V 8(A), V 9(B) Voltage Inverter
NSW
CCCL
OUT
SPD
+B
REDR
400W
P/T
AC1
AC2
PGND
P 8 Power Point Socket
ACC1
ACC2
GND
Near the Voltage Inverter
7. 5A ACC
15A PWR OUTLET
ACC SKT Relay
C 6 Cigarette Lighter
P 7 Power Point Socket
J 1 Junction Connector
Left Kick Panel
* 1 : w/ Trailer Towing
* 2 : w/o Trailer Towing

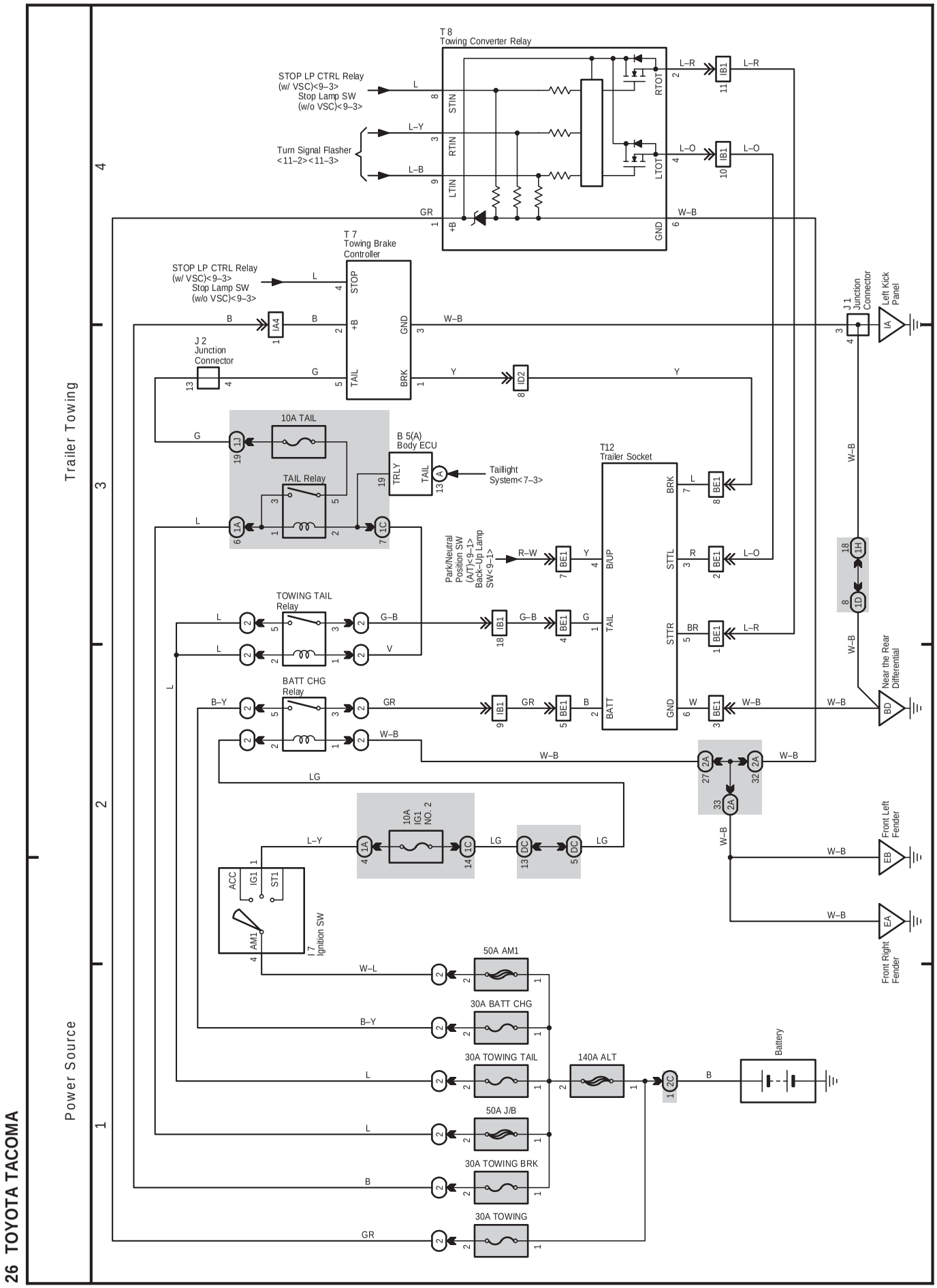
Trailer Towing
Power Source
T 8
Towing Converter Relay
STOP LP CTRL Relay
(w/ VSC)<9–3>
Stop Lamp SW
(w/o VSC)<9–3>
Turn Signal Flasher
<11–2><11–3>
STIN
RTIN
LTIN
+B
GND
RTOT
LTOT
T 7
Towing Brake
Controller
STOP
TAIL
BRK
J 2
Junction
Connector
J 1
Junction
Connector
Left Kick
Panel
10A TAIL
TAIL Relay
B 5(A)
Body ECU
TRLY
Taillight
System<7–3>
T12
Trailer Socket
BRK
STTL
STTR
B/UP
BATT
Park/Neutral
Position SW
(A/T)<9–1>
Back–Up Lamp
SW<9–1>
TOWING TAIL
Relay
BATT CHG
Relay
10A
IG1
NO. 2
ACC
IG1
ST1
AM1
I 7
Ignition SW
50A AM1
30A BATT CHG
30A TOWING TAIL
140A ALT
50A J/B
30A TOWING BRK
30A TOWING
Battery
Near the Rear
Differential
Front Left
Fender
Front Right
Fender

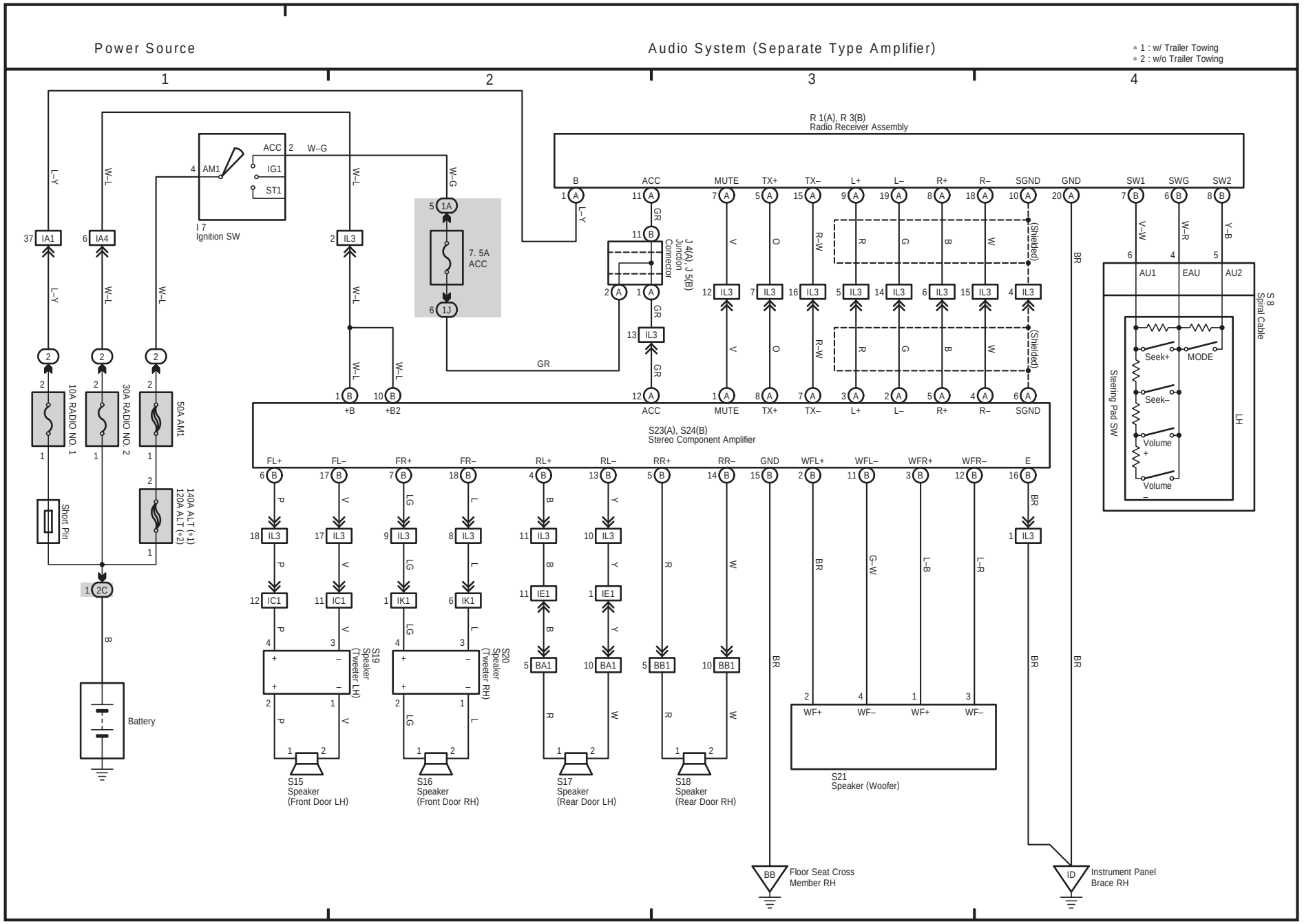
Power Source
Audio System (Separate Type Amplifier)
* 1 : w/ Trailer Towing
* 2 : w/o Trailer Towing
1
2
3
4
R 1(A), R 3(B)
Radio Receiver Assembly
B
ACC
MUTE
TX+
TX–
L+
L–
R+
R–
SGND
GND
SW1
SWG
SW2
ACC
AM1
IG1
ST1
I 7
Ignition SW
7. 5A
ACC
J 4(A), J 5(B)
Junction
Connector
(Shielded)
AU1
EAU
AU2
S 8
Spiral Cable
Steering Pad SW
Seek+
MODE
Seek–
Volume
+
Volume
–
LH
+B
+B2
S23(A), S24(B)
Stereo Component Amplifier
FL+
FL–
FR+
FR–
RL+
RL–
RR+
RR–
GND
WFL+
WFL–
WFR+
WFR–
E
10A RADIO NO. 1
30A RADIO NO. 2
50A AM1
140A ALT (*1)
120A ALT (*2)
Short Pin
Battery
S19
Speaker
(Tweeter LH)
S20
Speaker
(Tweeter RH)
S15
Speaker
(Front Door LH)
S16
Speaker
(Front Door RH)
S17
Speaker
(Rear Door LH)
S18
Speaker
(Rear Door RH)
S21
Speaker (Woofer)
BB
Floor Seat Cross
Member RH
ID
Instrument Panel
Brace RH

28 TOYOTA TACOMA

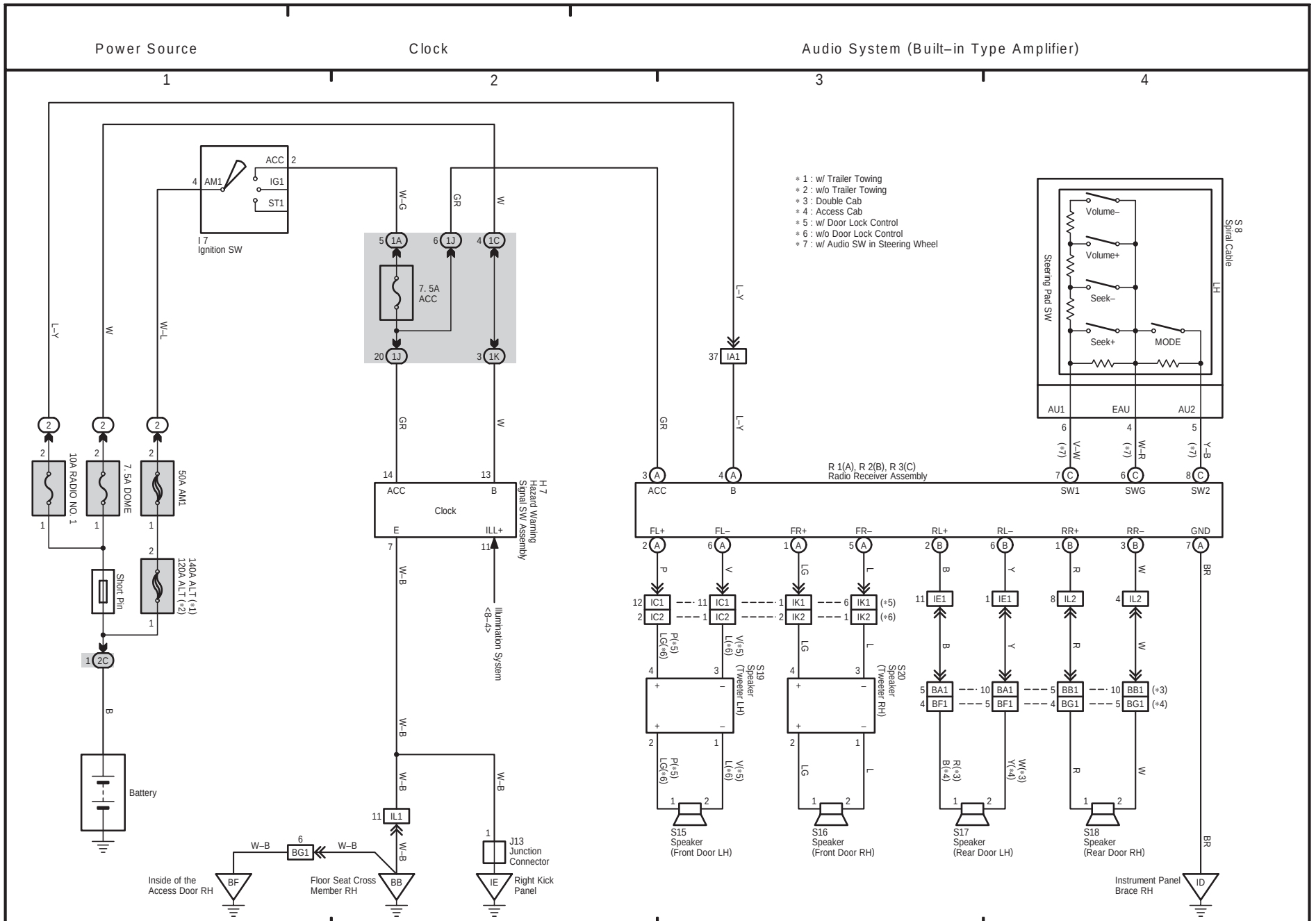

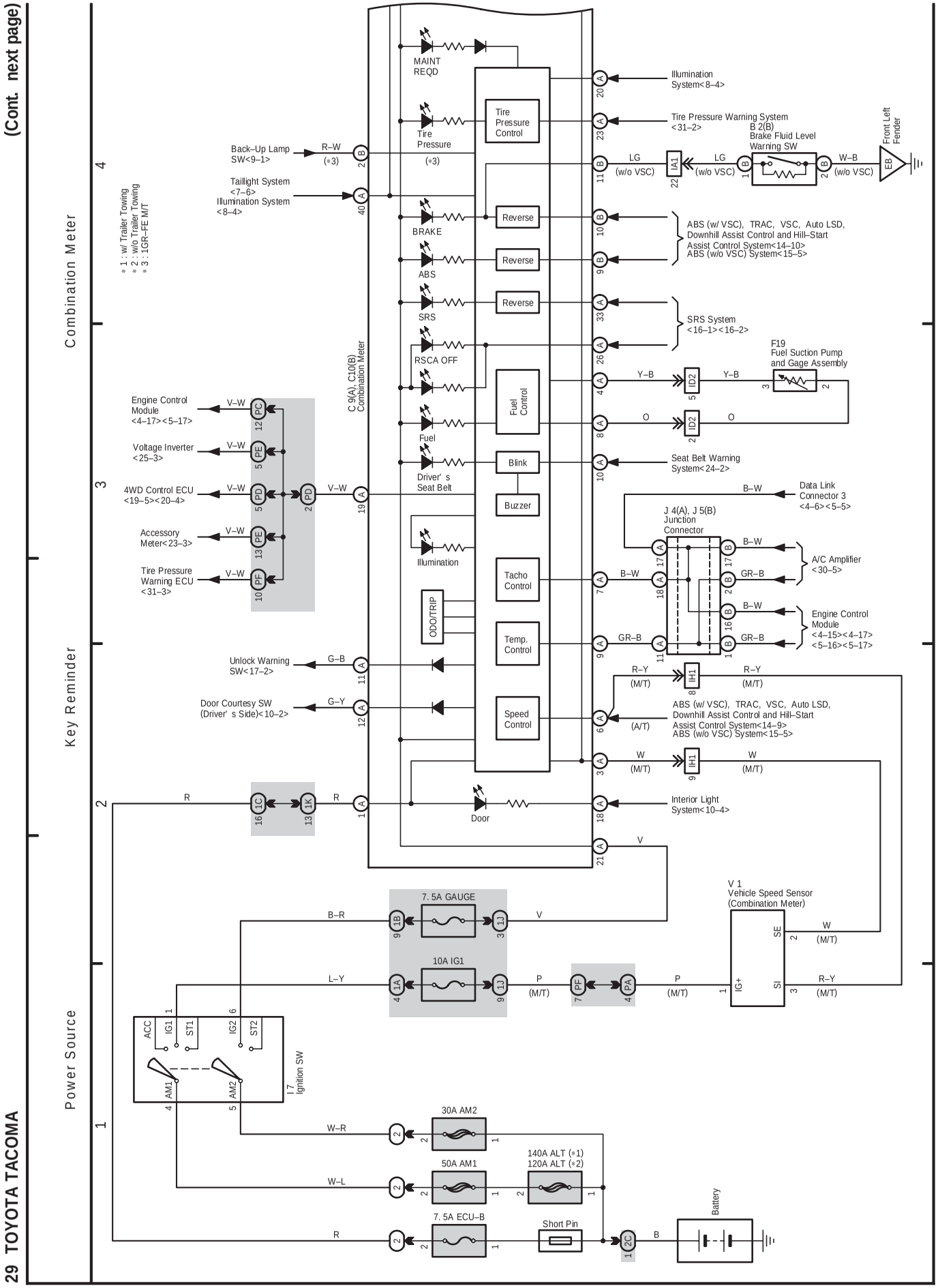
(Cont. next page)
Combination Meter
Key Reminder
Power Source
29 TOYOTA TACOMA
* 1 : w/ Trailer Towing
* 2 : w/o Trailer Towing
* 3 : 1GR-FE M/T
MAINT REQD
Tire Pressure Control
Tire Pressure
Reverse
BRAKE
ABS
SRS
RSCA OFF
Fuel Control
Fuel
Blink
Driver' s Seat Belt
Buzzer
Illumination
Tacho Control
Temp. Control
Speed Control
ODO/TRIP
Door
Illumination System<8–4>
Tire Pressure Warning System <31–2>
B 2(B) Brake Fluid Level Warning SW
Front Left Fender
ABS (w/ VSC), TRAC, VSC, Auto LSD, Downhill Assist Control and Hill–Start Assist Control System<14–10>
ABS (w/o VSC) System<15–5>
SRS System <16–1><16–2>
F19 Fuel Suction Pump and Gage Assembly
Seat Belt Warning System<24–2>
Data Link Connector 3 <4–6><5–5>
J 4(A), J 5(B) Junction Connector
A/C Amplifier <30–5>
Engine Control Module <4–15><4–17><5–16><5–17>
Interior Light System<10–4>
Back–Up Lamp SW<9–1>
Taillight System <7–6>
Illumination System <8–4>
Engine Control Module <4–17><5–17>
Voltage Inverter <25–3>
4WD Control ECU <19–5><20–4>
Accessory Meter<23–3>
Tire Pressure Warning ECU <31–3>
Unlock Warning SW<17–2>
Door Courtesy SW (Driver' s Side)<10–2>
C 9(A), C10(B) Combination Meter
ABS (w/ VSC), TRAC, VSC, Auto LSD, Downhill Assist Control and Hill–Start Assist Control System<14–9>
ABS (w/o VSC) System<15–5>
V 1 Vehicle Speed Sensor (Combination Meter)
7. 5A GAUGE
10A IG1
I 7 Ignition SW
ACC
IG1
ST1
IG2
ST2
AM1
AM2
30A AM2
50A AM1
140A ALT (*1) 120A ALT (*2)
7. 5A ECU–B
Short Pin
Battery

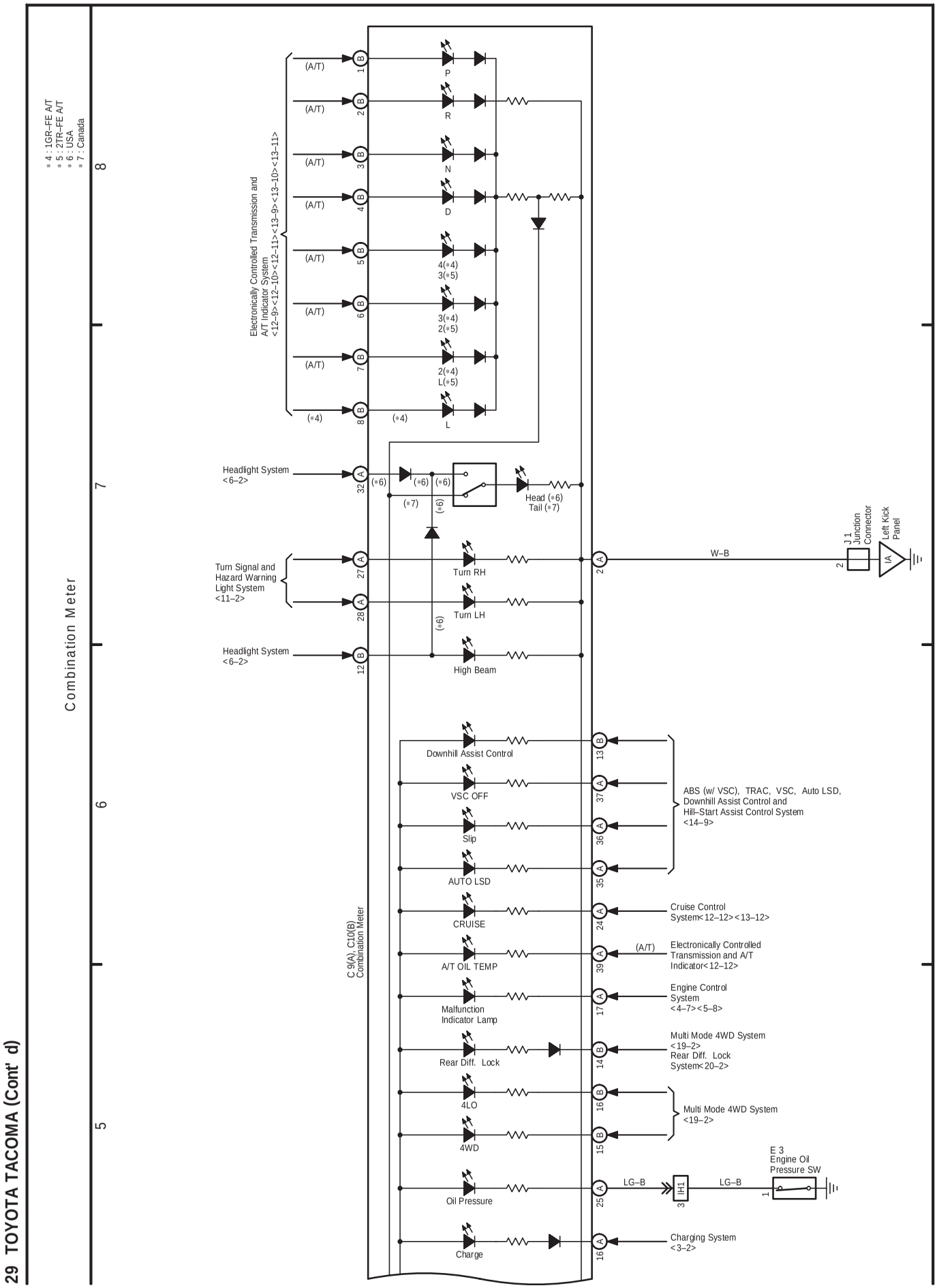
29 TOYOTA TACOMA (Cont' d)
Combination Meter
* 4 : 1GR–FE A/T
* 5 : 2TR–FE A/T
* 6 : USA
* 7 : Canada
Electronically Controlled Transmission and A/T Indicator System <12–9><12–10><12–11><13–9><13–10><13–11>
(A/T)
P
R
N
D
4(*4) 3(*5)
3(*4) 2(*5)
2(*4) L(*5)
L
(*4)
Headlight System <6–2>
Head (*6) Tail (*7)
Turn Signal and Hazard Warning Light System <11–2>
Turn RH
Turn LH
High Beam
W–B
J1 Junction Connector
Left Kick Panel
Downhill Assist Control
VSC OFF
Slip
AUTO LSD
CRUISE
A/T OIL TEMP
Malfunction Indicator Lamp
Rear Diff. Lock
4LO
4WD
Oil Pressure
Charge
C 9(A), C10(B) Combination Meter
ABS (w/ VSC), TRAC, VSC, Auto LSD, Downhill Assist Control and Hill–Start Assist Control System <14–9>
Cruise Control System<12–12><13–12>
Electronically Controlled Transmission and A/T Indicator<12–12>
Engine Control System <4–7><5–8>
Multi Mode 4WD System <19–2>
Rear Diff. Lock System<20–2>
Multi Mode 4WD System <19–2>
LG–B
IH1
E 3 Engine Oil Pressure SW
Charging System <3–2>

(Cont. next page)

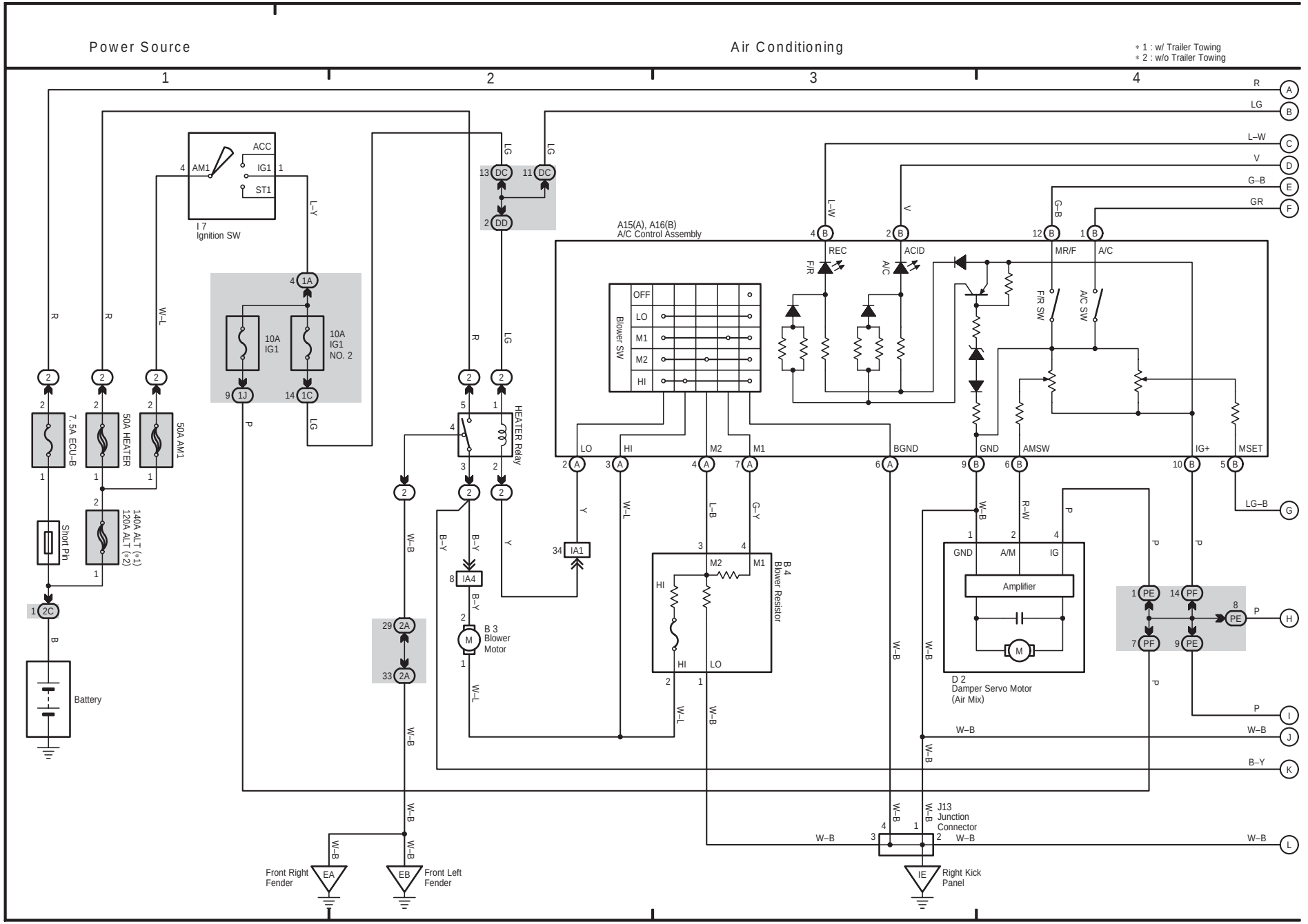

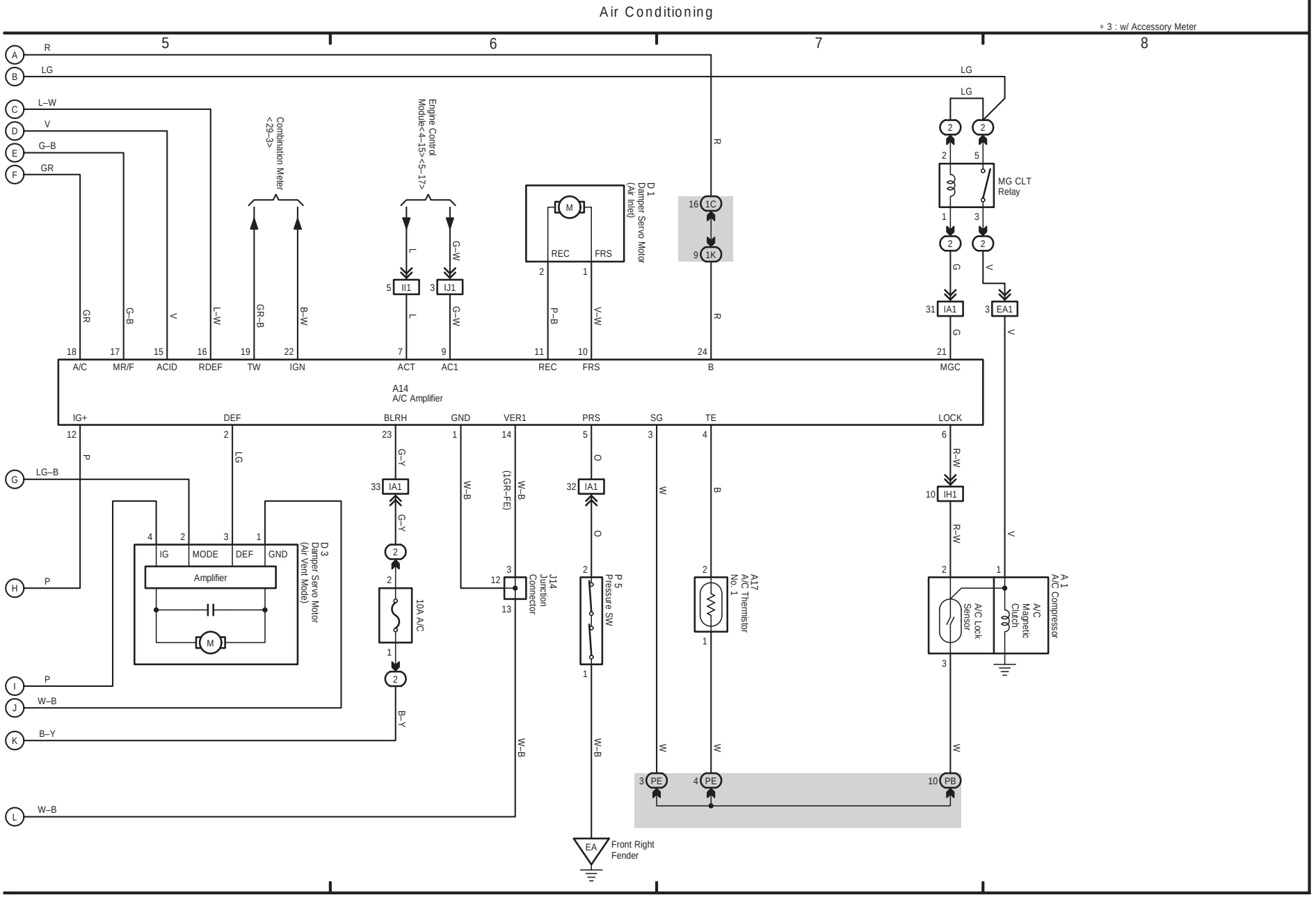
Air Conditioning
* 3 : w/ Accessory Meter
5
6
7
8
R
LG
L–W
V
G–B
GR
Combination Meter <29–3>
Engine Control Module<4–15><5–17>
D 1 Damper Servo Motor (Air Inlet)
M
REC
FRS
MG CLT Relay
A14 A/C Amplifier
IG+
DEF
BLRH
GND
VER1
PRS
SG
TE
LOCK
A/C
MR/F
ACID
RDEF
TW
IGN
ACT
AC1
REC
FRS
B
MGC
LG–B
P
W–B
B–Y
L
D 3 Damper Servo Motor (Air Vent Mode)
IG
MODE
DEF
GND
Amplifier
10A A/C
J14 Junction Connector
P 5 Pressure SW
A17 A/C Thermistor No. 1
A 1 A/C Compressor
A/C Lock Sensor
A/C Magnetic Clutch
EA
Front Right Fender

31 TOYOTA TACOMA

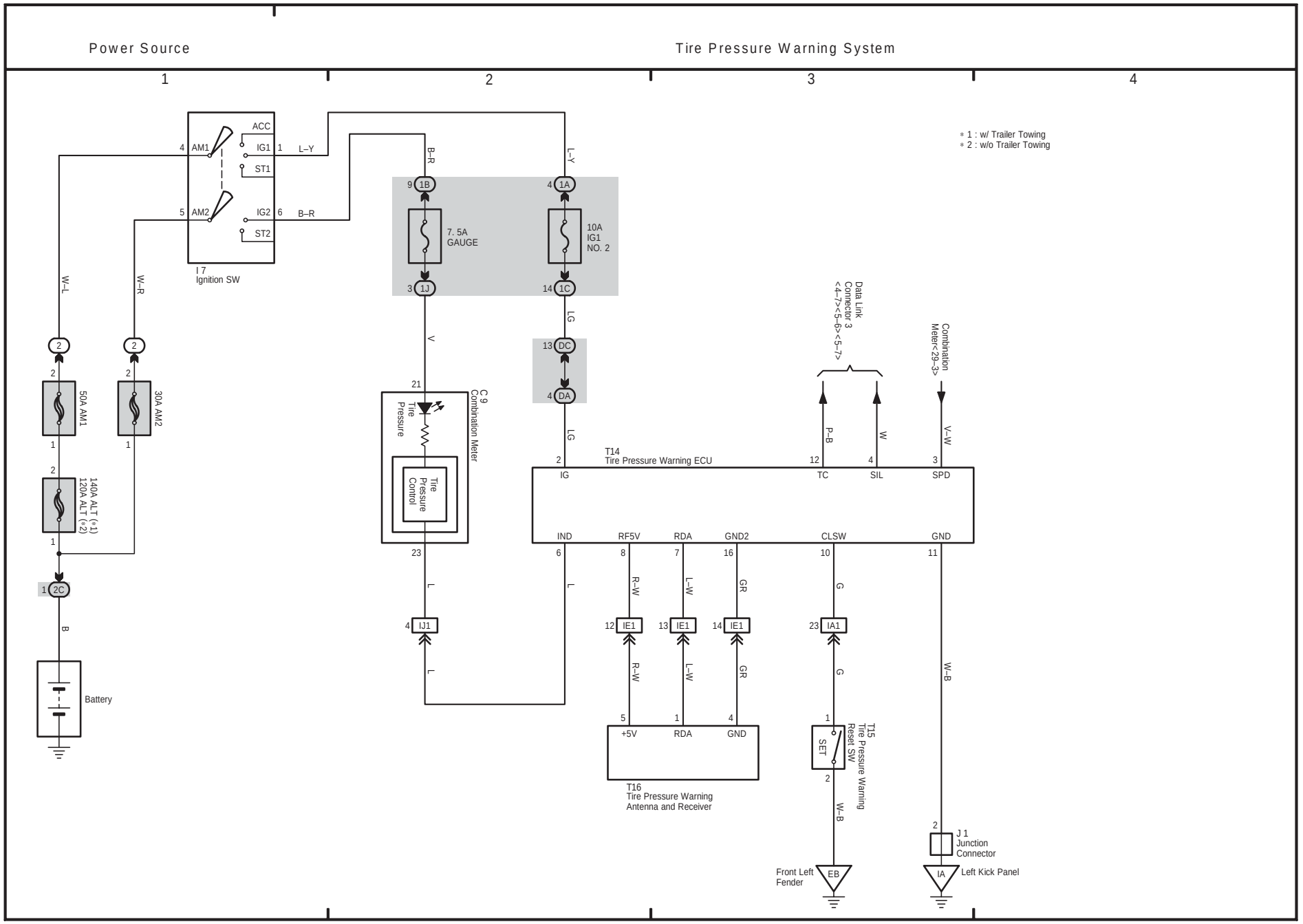

2007 TOYOTA TACOMA ELECTRICAL WIRING DIAGRAM SYSTEM CIRCUITS

	Page
ABS (w/ VSC)	172
ABS (w/o VSC)	182
Accessory Meter	234
Air Conditioning	268
Audio System (Built–in Type Amplifier)	260
Audio System (Separate Type Amplifier)	256
Auto LSD	172
Automatic Glare–Resistant EC Mirror	230
Back–Up Light	126
Charging	76
Cigarette Lighter	244
Clock	250
Combination Meter	262
Cruise Control (1GR–FE)	158
Cruise Control (2TR–FE)	164
Door Lock Control	202
Downhill Assist Control	172
Electronically Controlled Transmission and A/T Indicator (1GR–FE)	144
Electronically Controlled Transmission and A/T Indicator (2TR–FE)	152
Engine Control (1GR–FE)	78
Engine Control (2TR–FE)	90
Engine Immobiliser System (1GR–FE)	102
Engine Immobiliser System (2TR–FE)	106
Front Fog Light	116
Headlight	110
Hill–Start Assist Control	172
Horn	238
Ignition	72
Illumination	122
Interior Light	130
Key Reminder	142
Light Auto Turn Off System	138
Multi Mode 4WD	212
Multiplex Communication System (CAN)	170
Power Outlet (115V)	240
Power Outlet (12V)	244
Power Source	64
Power Window	196
Rear Differential Lock (2WD)	218
Rear Differential Lock (4WD)	212
Remote Control Mirror	228
Seat Belt Warning	232
Shift Lock	226
SRS	187
Starting	68
Stop Light	128
Taillight	118

	Page
Tire Pressure Warning System	252
TRAC	172
Trailer Towing	246
Turn Signal and Hazard Warning Light	134
VSC	172
Wiper and Washer (w/ INT Time SW)	222
Wiper and Washer (w/o INT Time SW)	224
Wireless Door Lock Control	206

F RELAY LOCATIONS

[Engine Compartment]

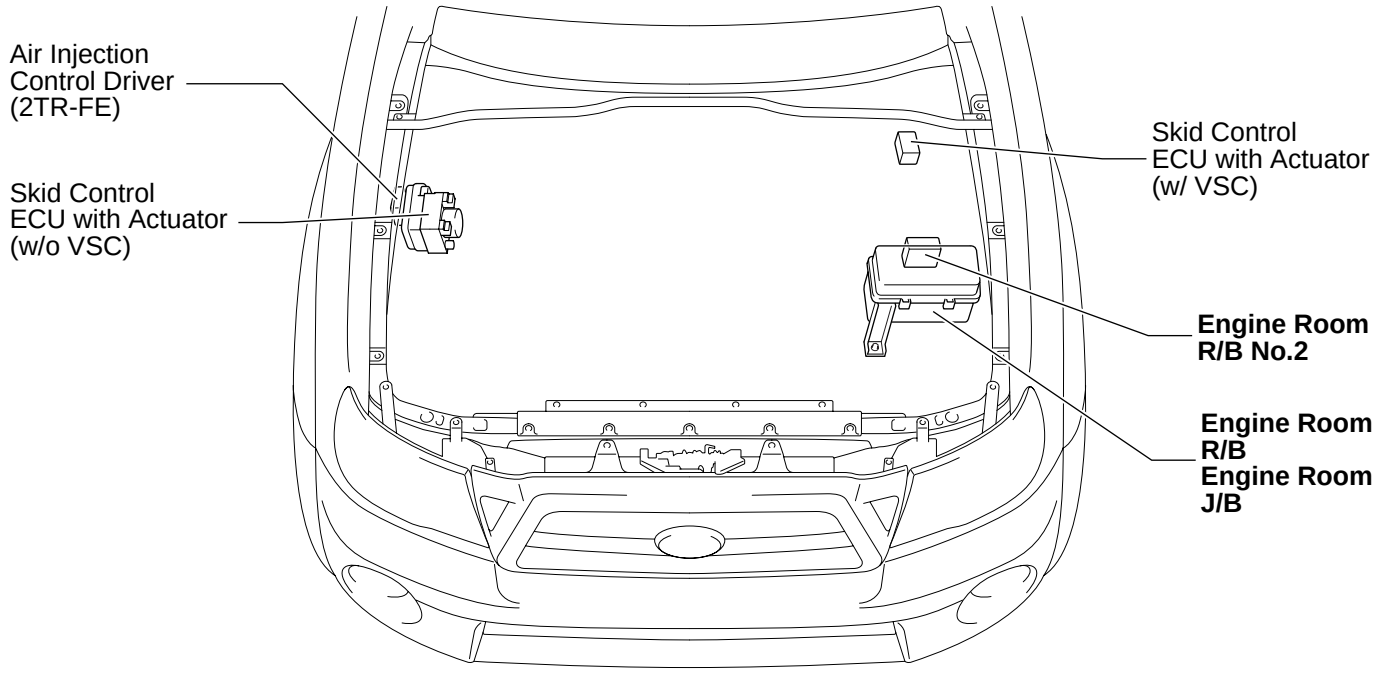

[Instrument Panel]

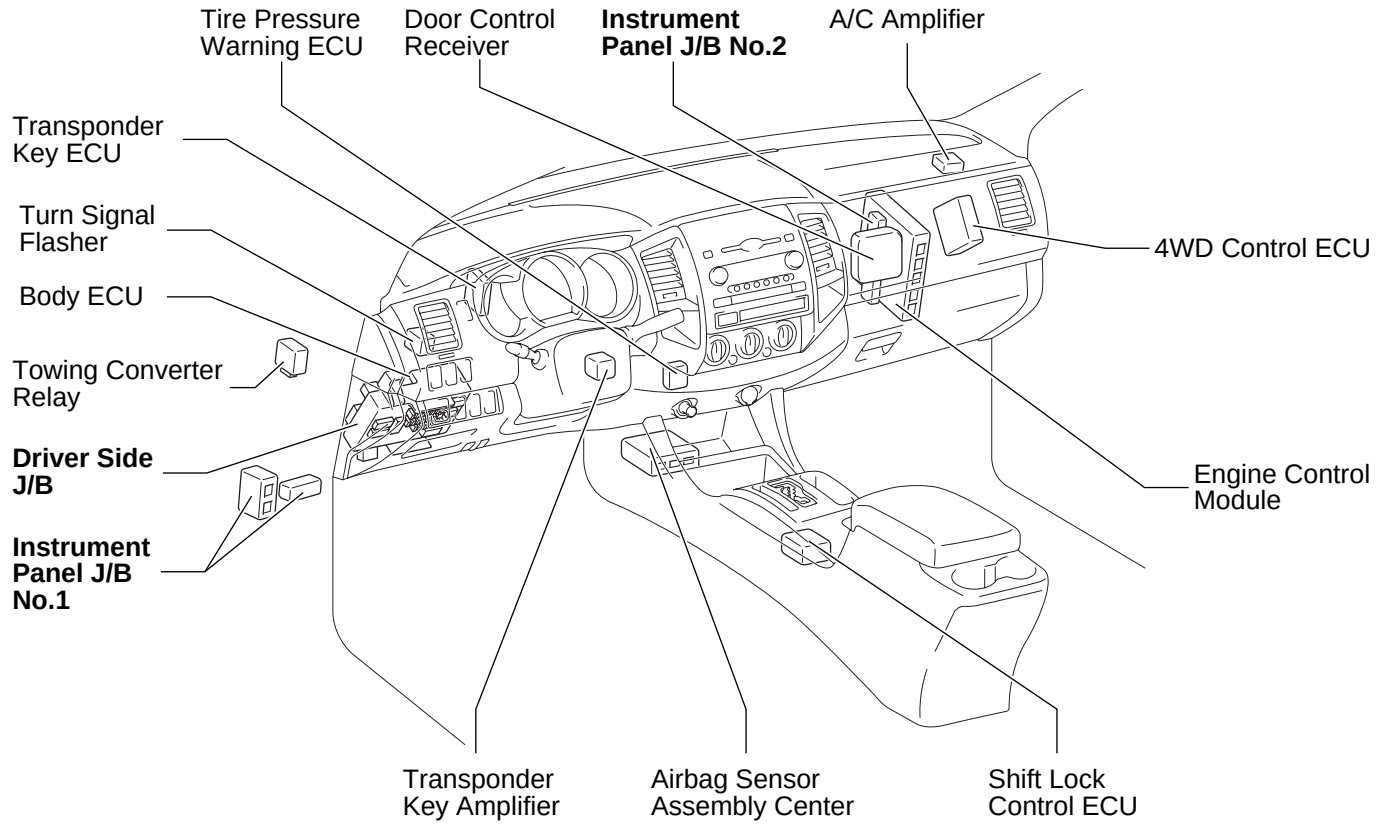

[Body]
(Double Cab)

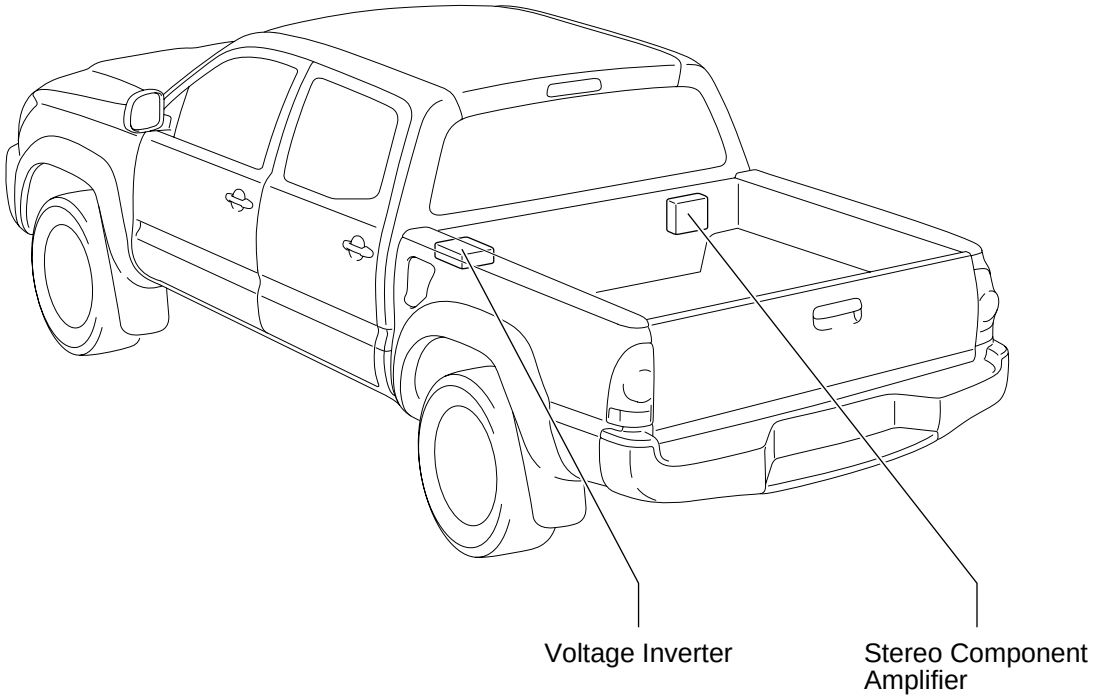

(Access Cab)

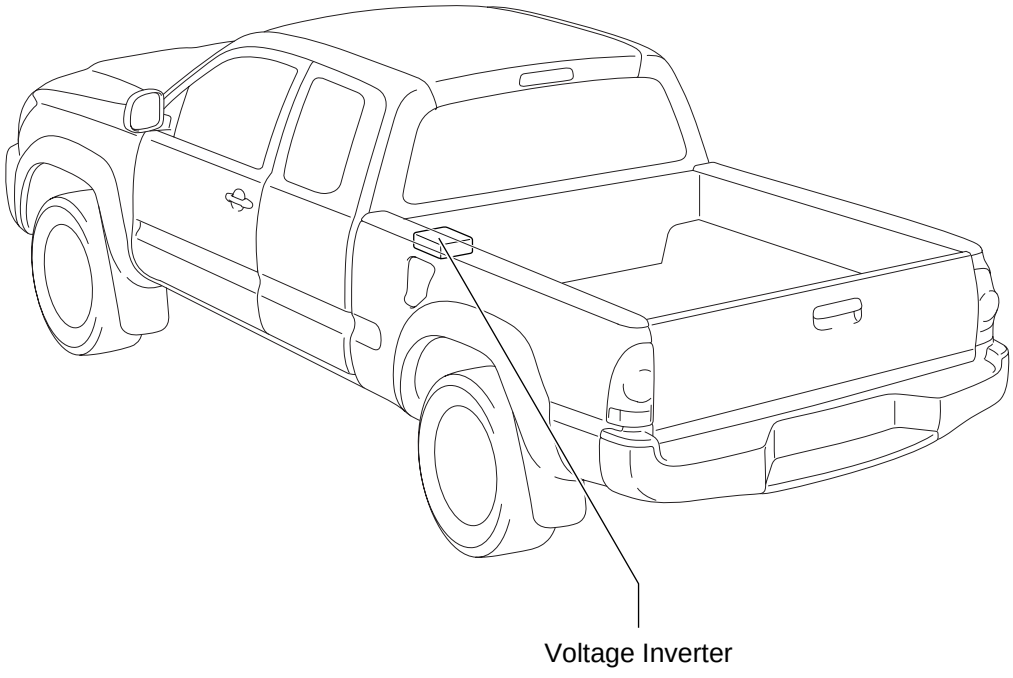

[Seat]
(Separate Seat)

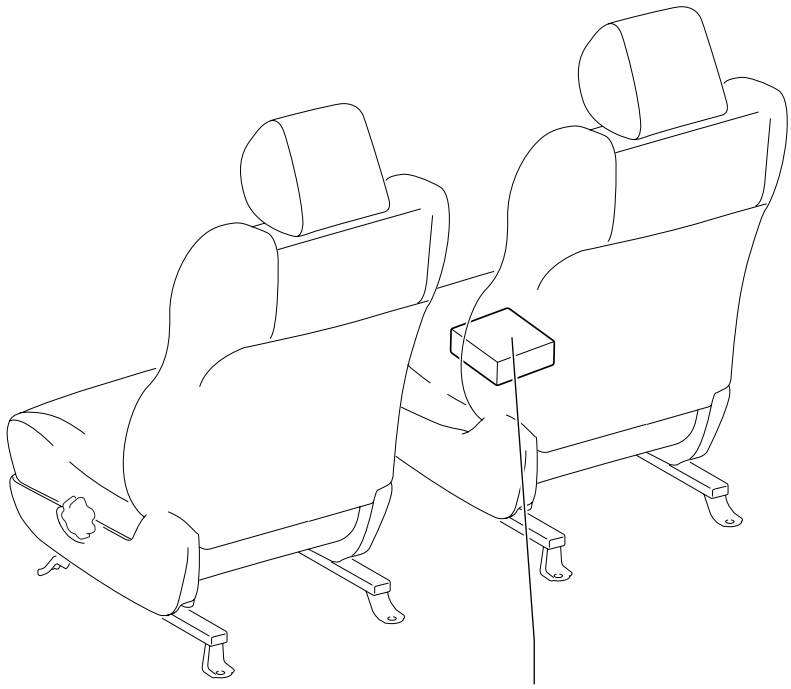

(Bench Seat)

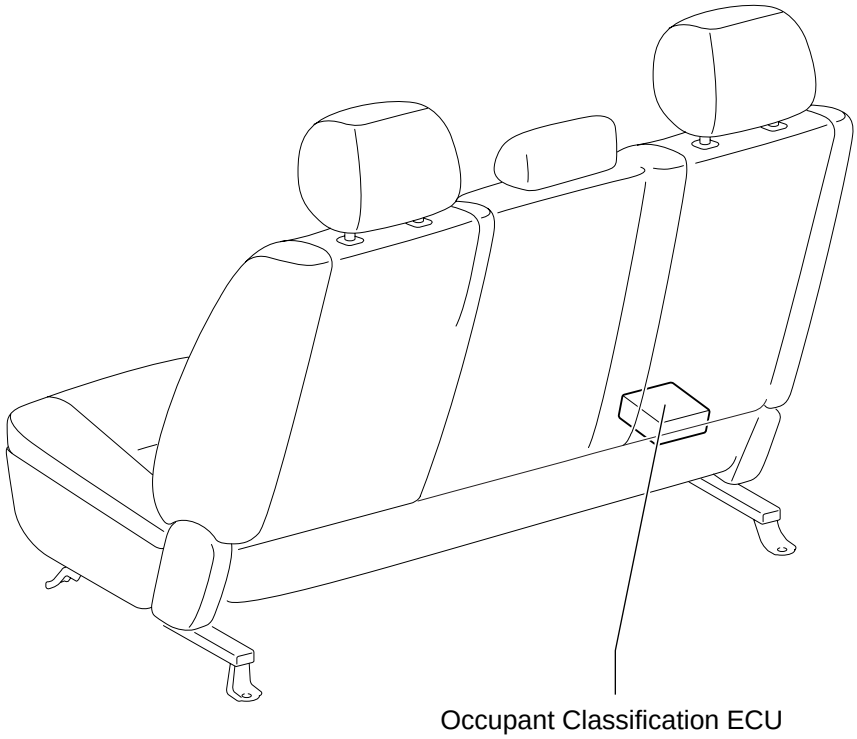

③ : Engine Room R/B No.2	Engine Compartment Left (See Page 20)

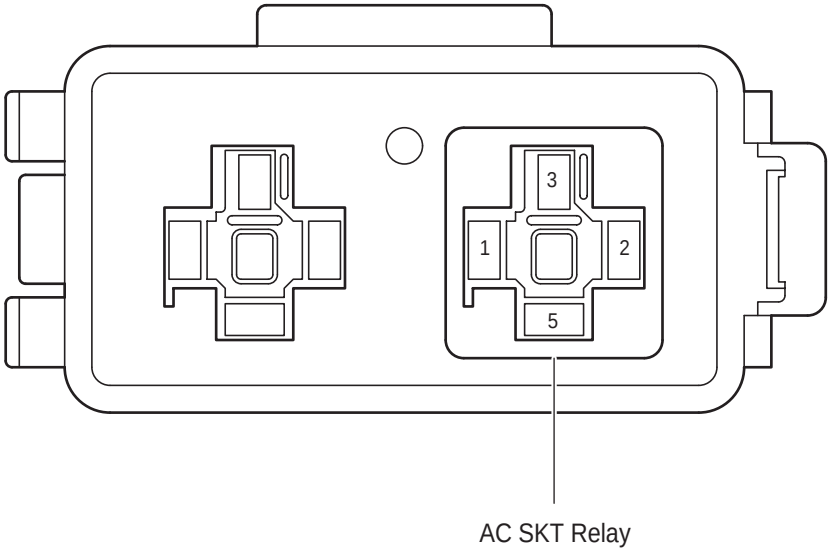

F RELAY LOCATIONS

② : Engine Room R/B ⬭ : Engine Room J/B	**Engine Compartment Left (See Page 20)**

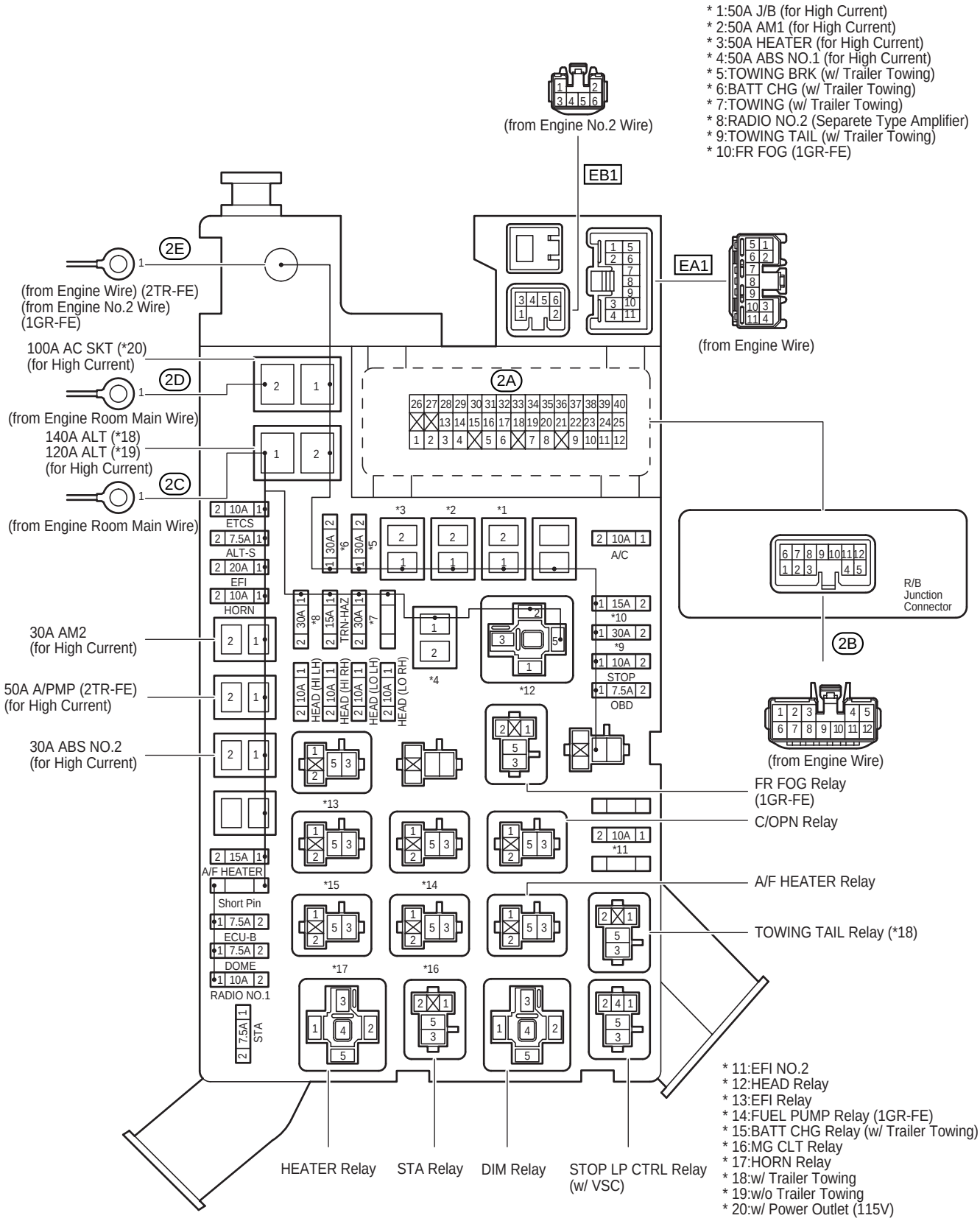

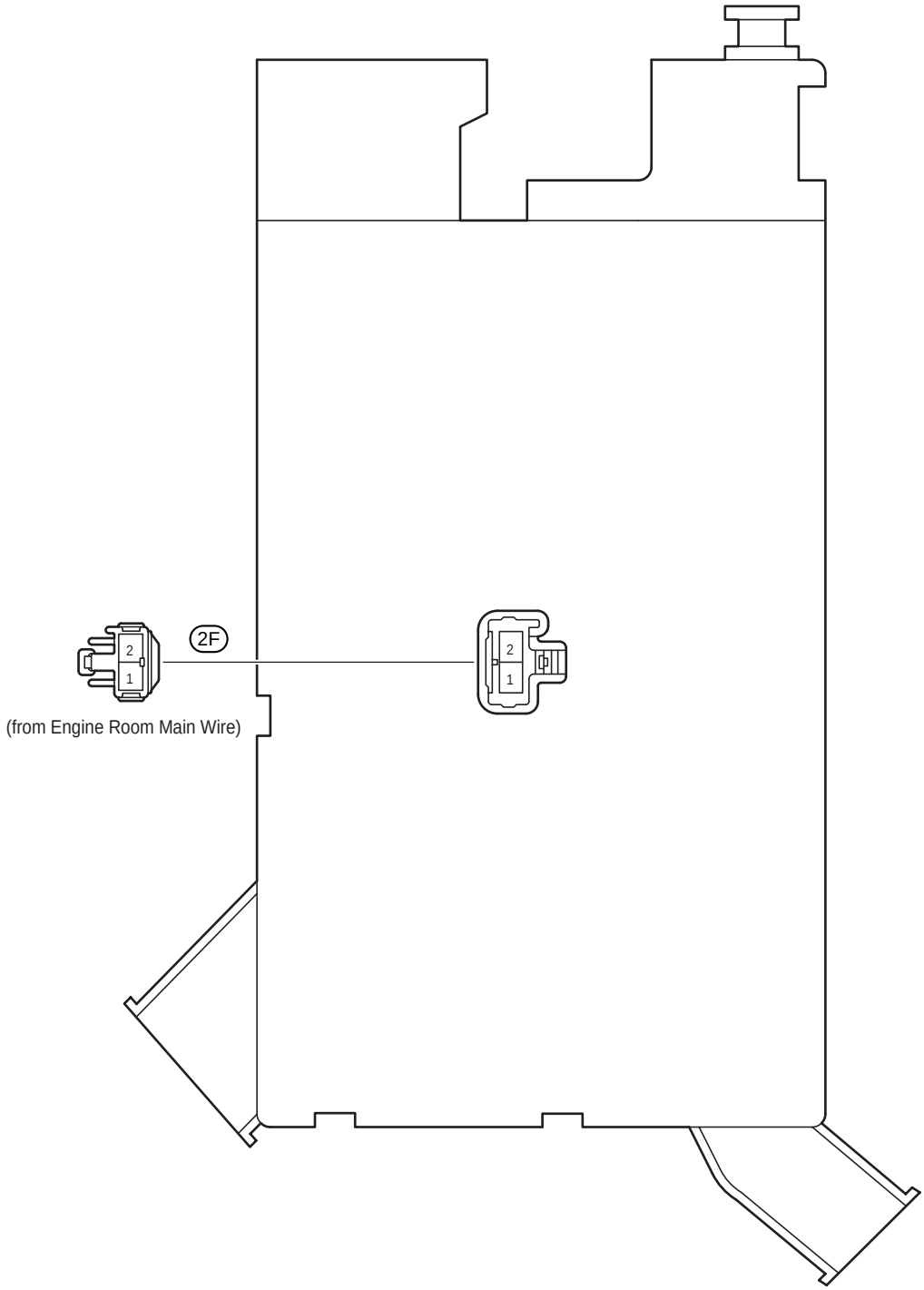
2F
2
1
2
1
(from Engine Room Main Wire)

[Engine Room R/B Junction Connector Inner Circuit]

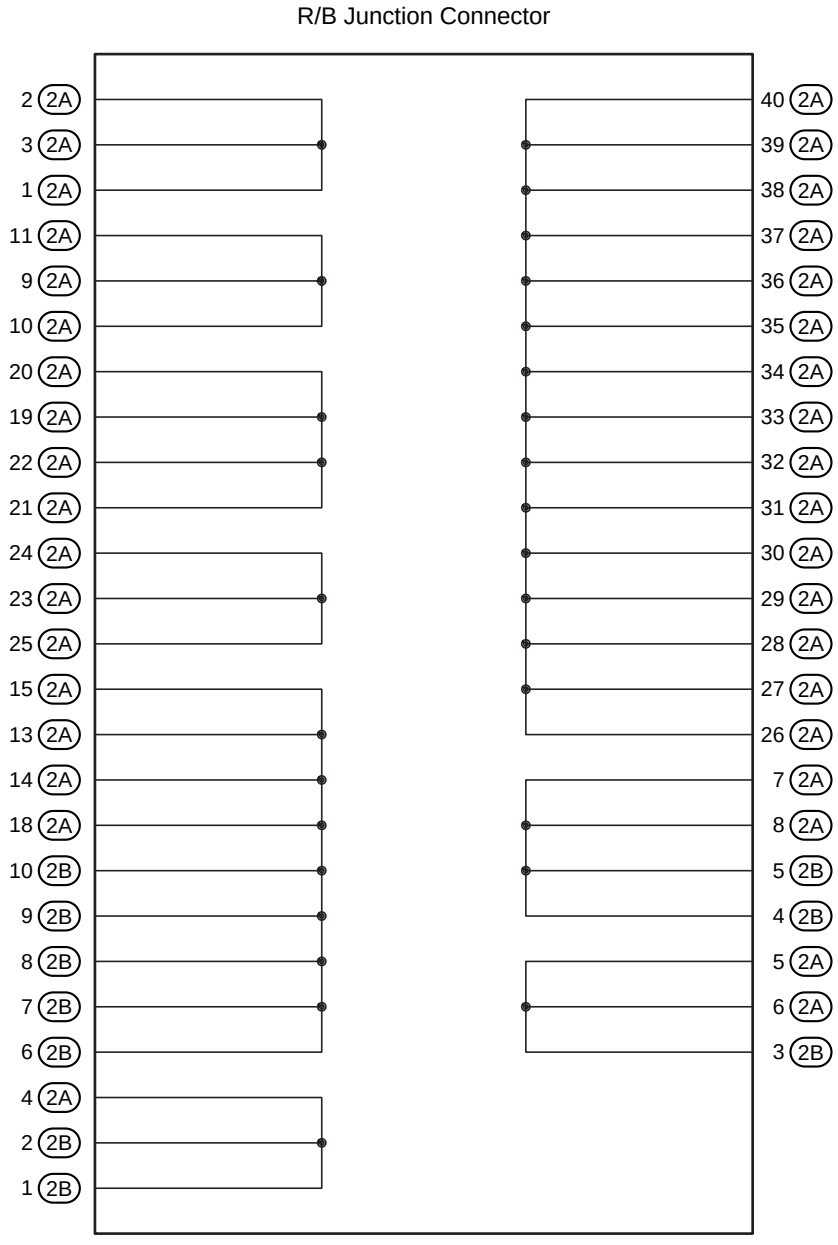

F RELAY LOCATIONS

: Driver Side J/B	Lower Finish Panel (See Page 20)

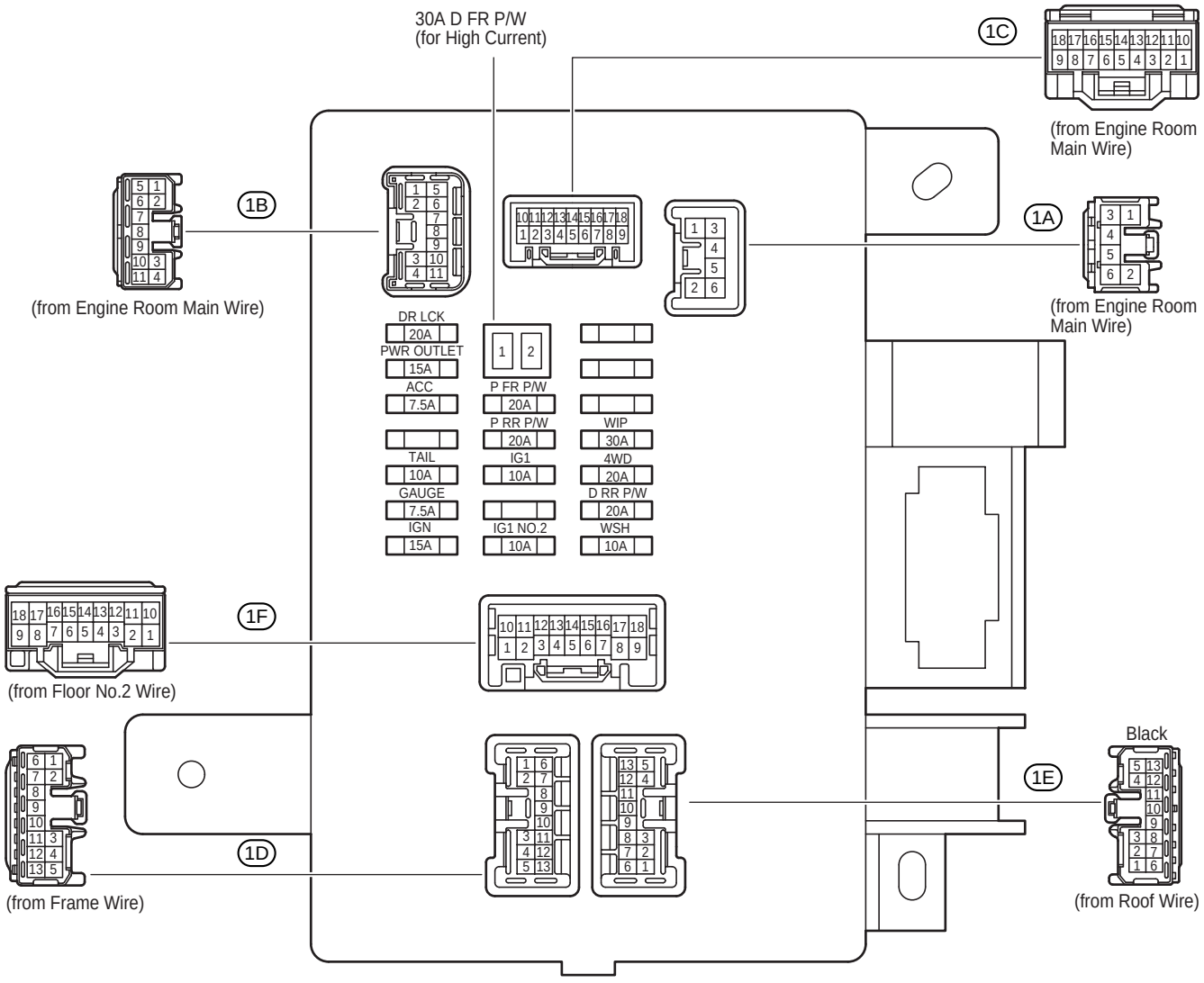

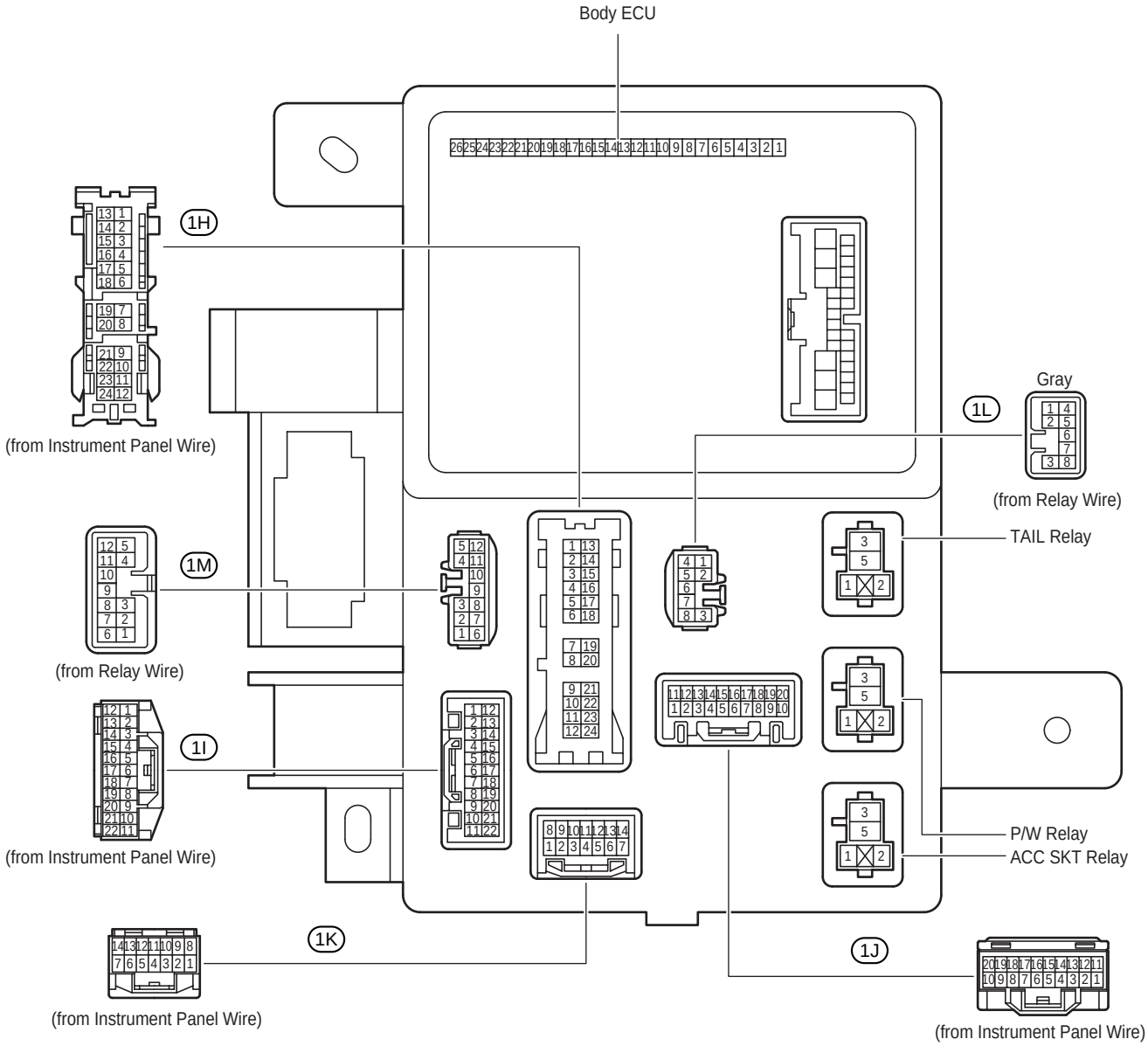
Body ECU
1H
(from Instrument Panel Wire)
1L
Gray
(from Relay Wire)
1M
(from Relay Wire)
TAIL Relay
1I
(from Instrument Panel Wire)
P/W Relay
ACC SKT Relay
1K
(from Instrument Panel Wire)
1J
(from Instrument Panel Wire)

[Driver Side J/B Inner Circuit]

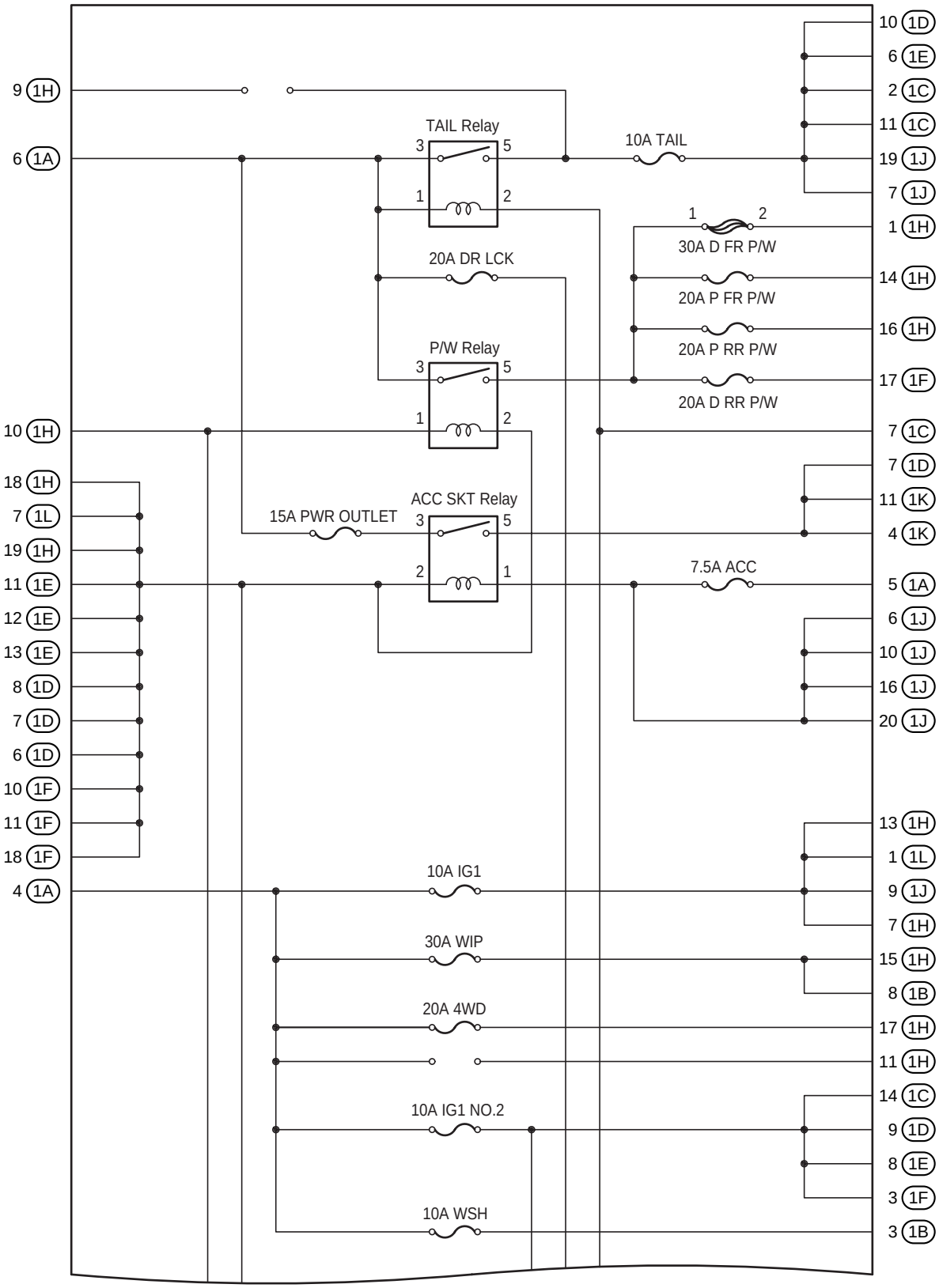

(Cont. Next Page)

(Cont'd)

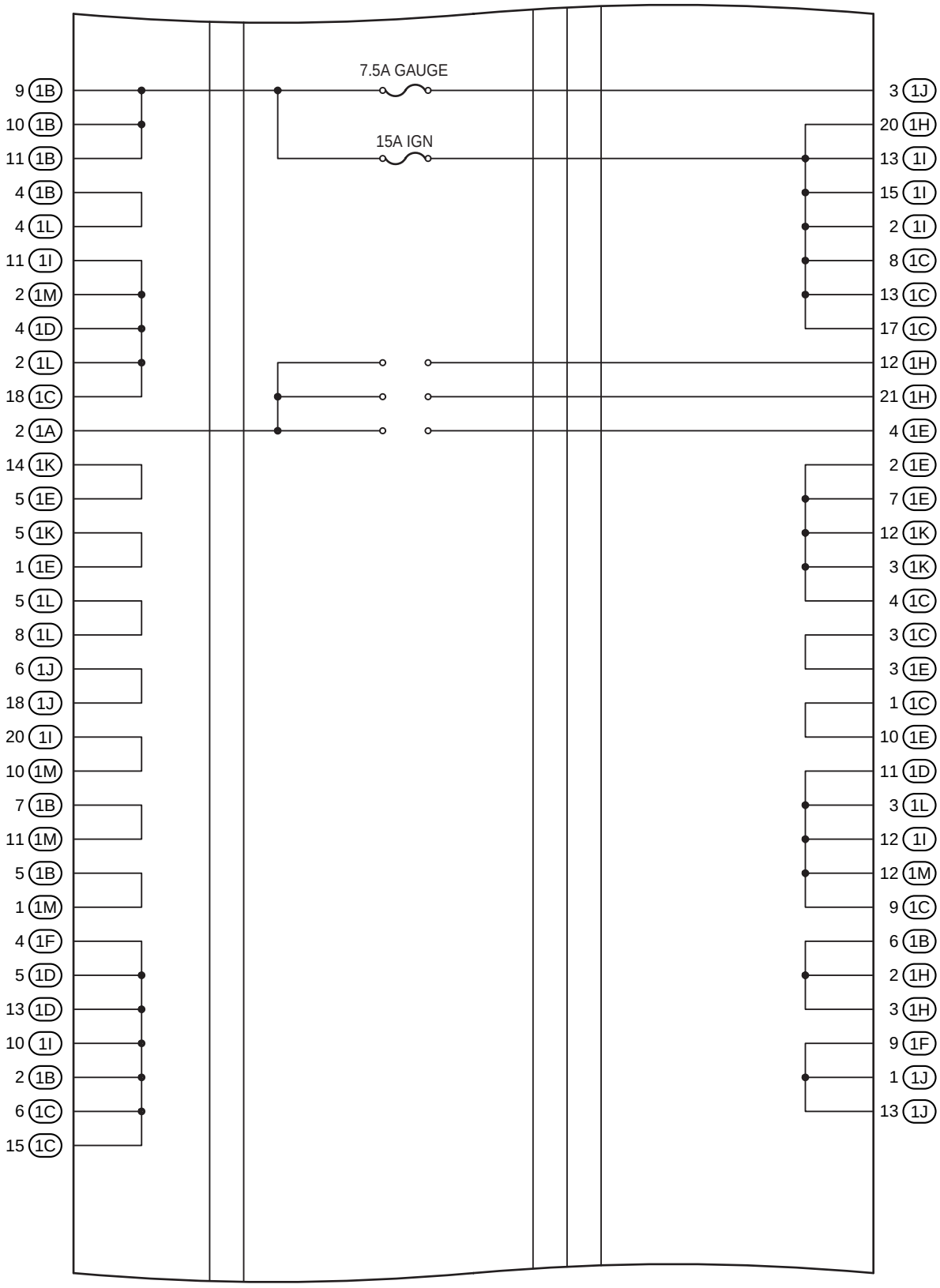

(Cont. Next Page)

[Driver Side J/B Inner Circuit]

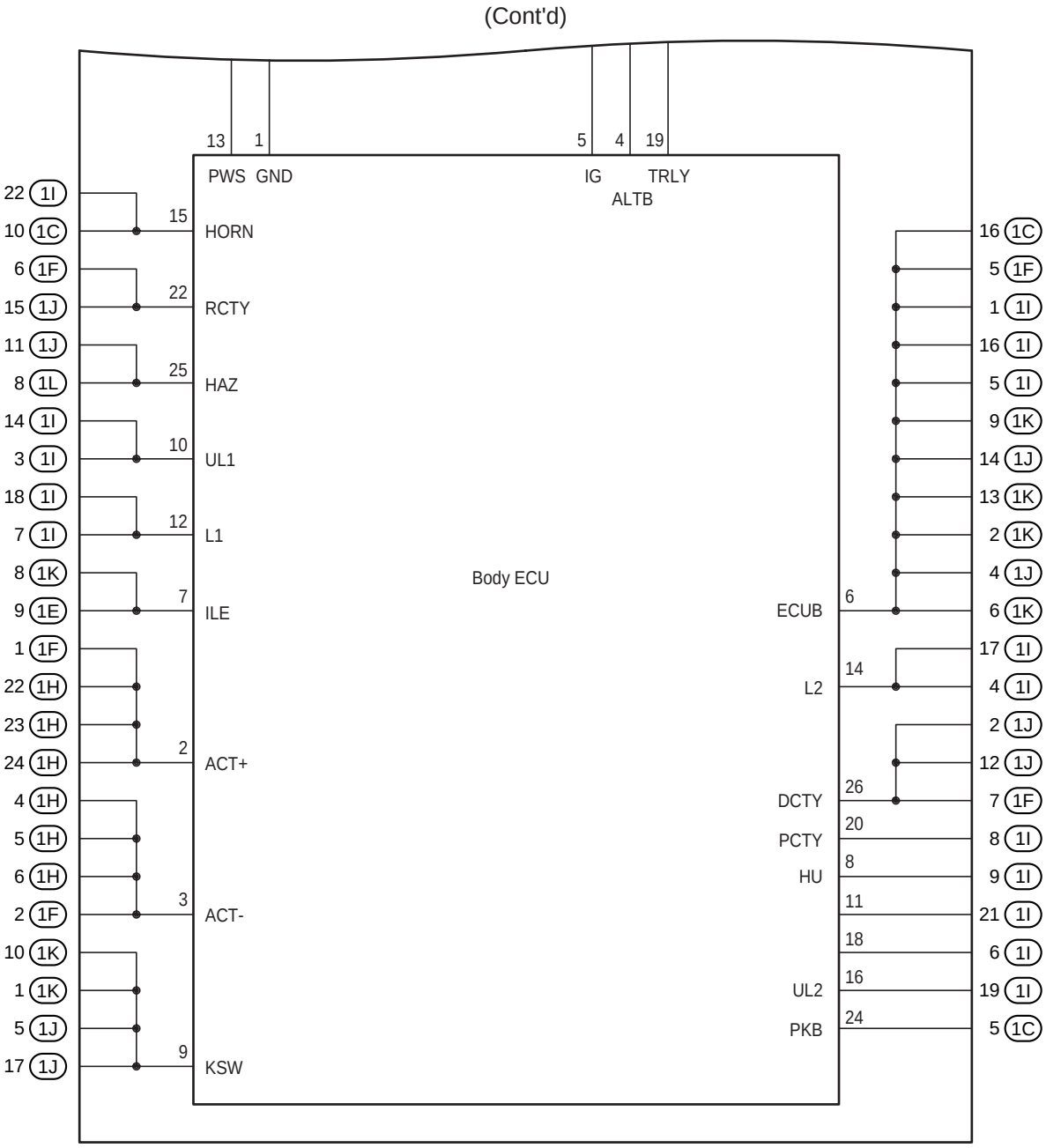

F RELAY LOCATIONS

: Instrument Panel J/B No.1	Left Kick Panel (See Page 20)

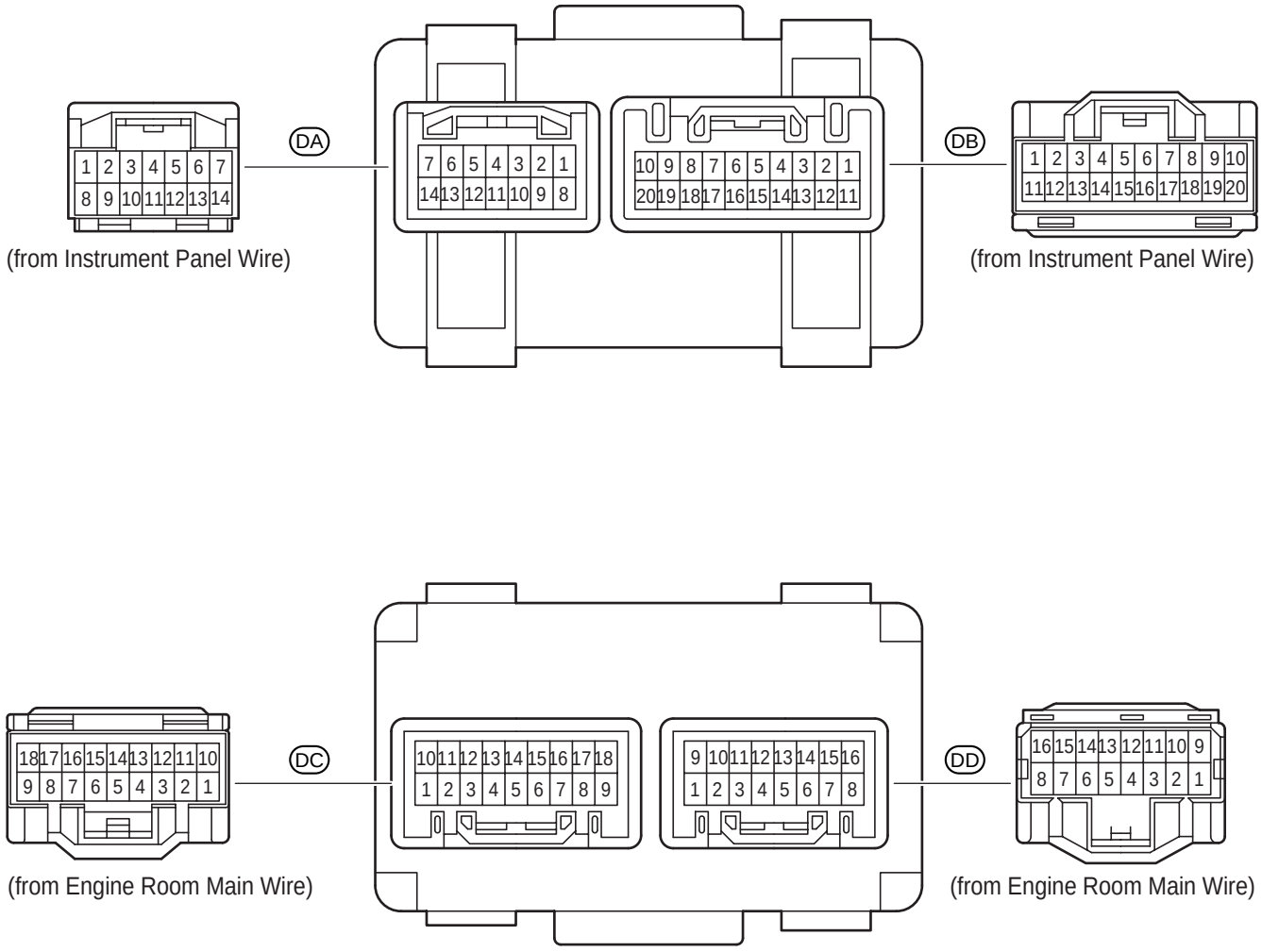

[Instrument Panel J/B No.1 Inner Circuit]

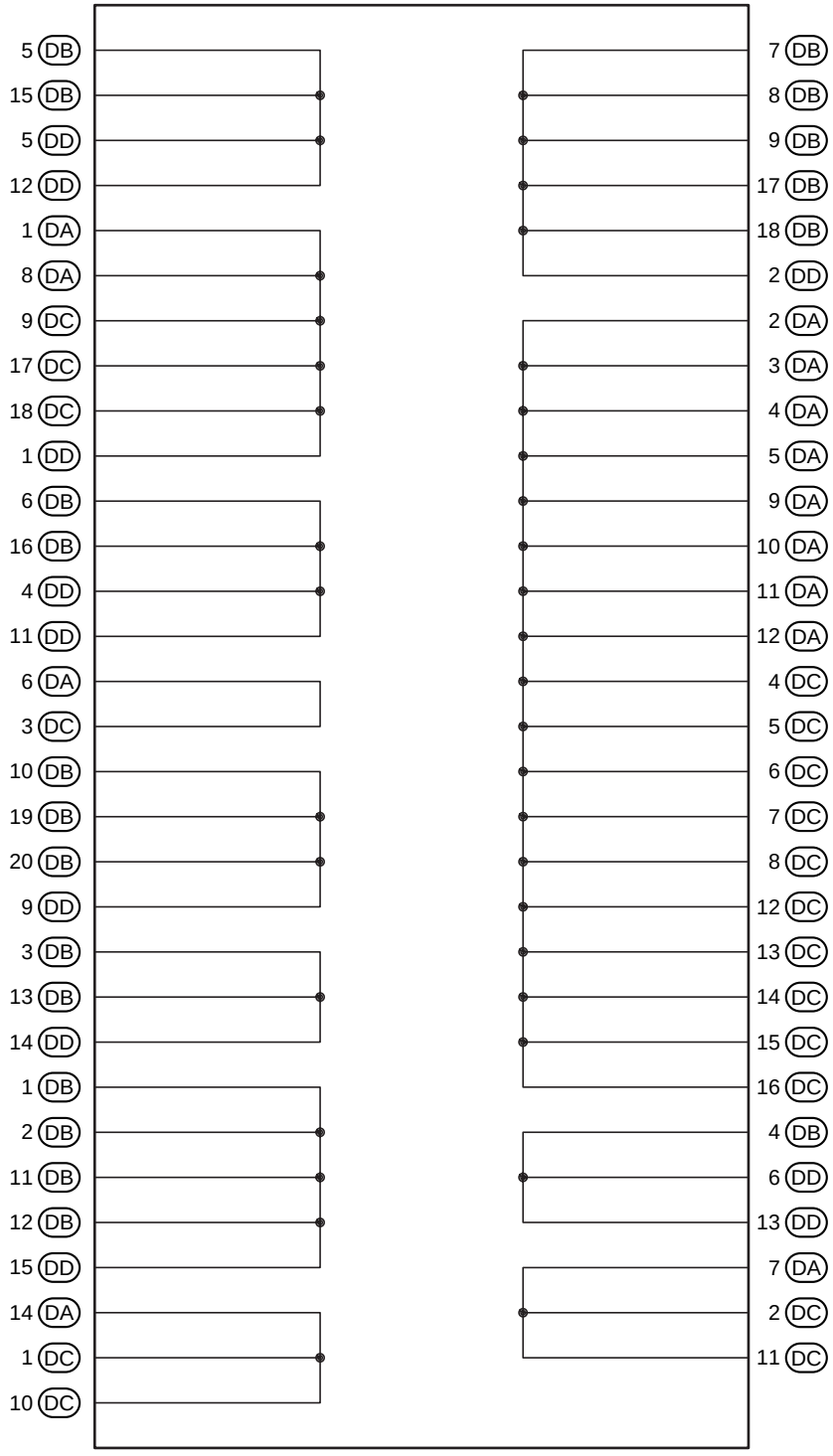

F RELAY LOCATIONS

: Instrument Panel J/B No.2	Right Side of Glove Box (See Page 20)

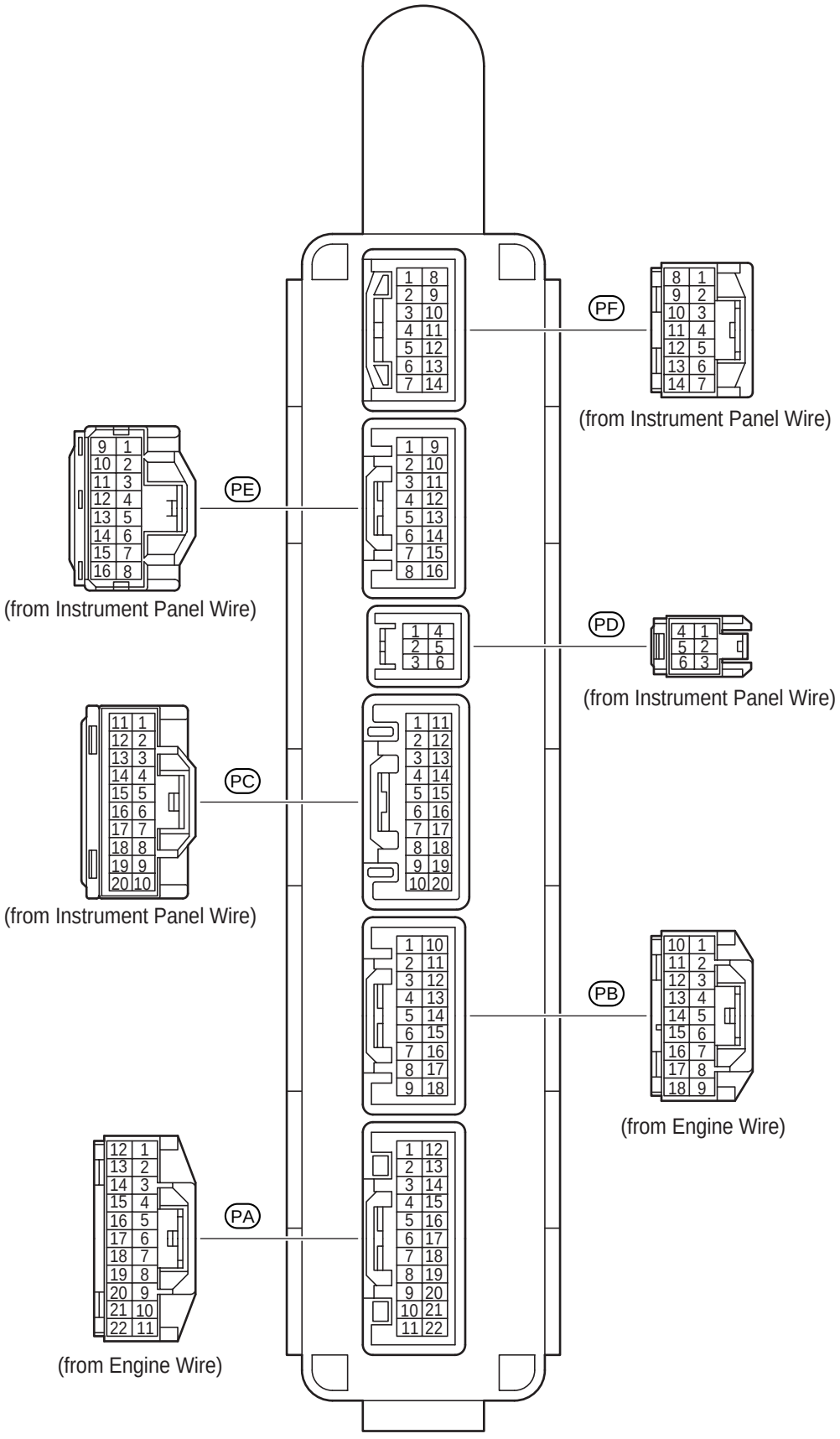

[Instrument Panel J/B No.2 Inner Circuit]

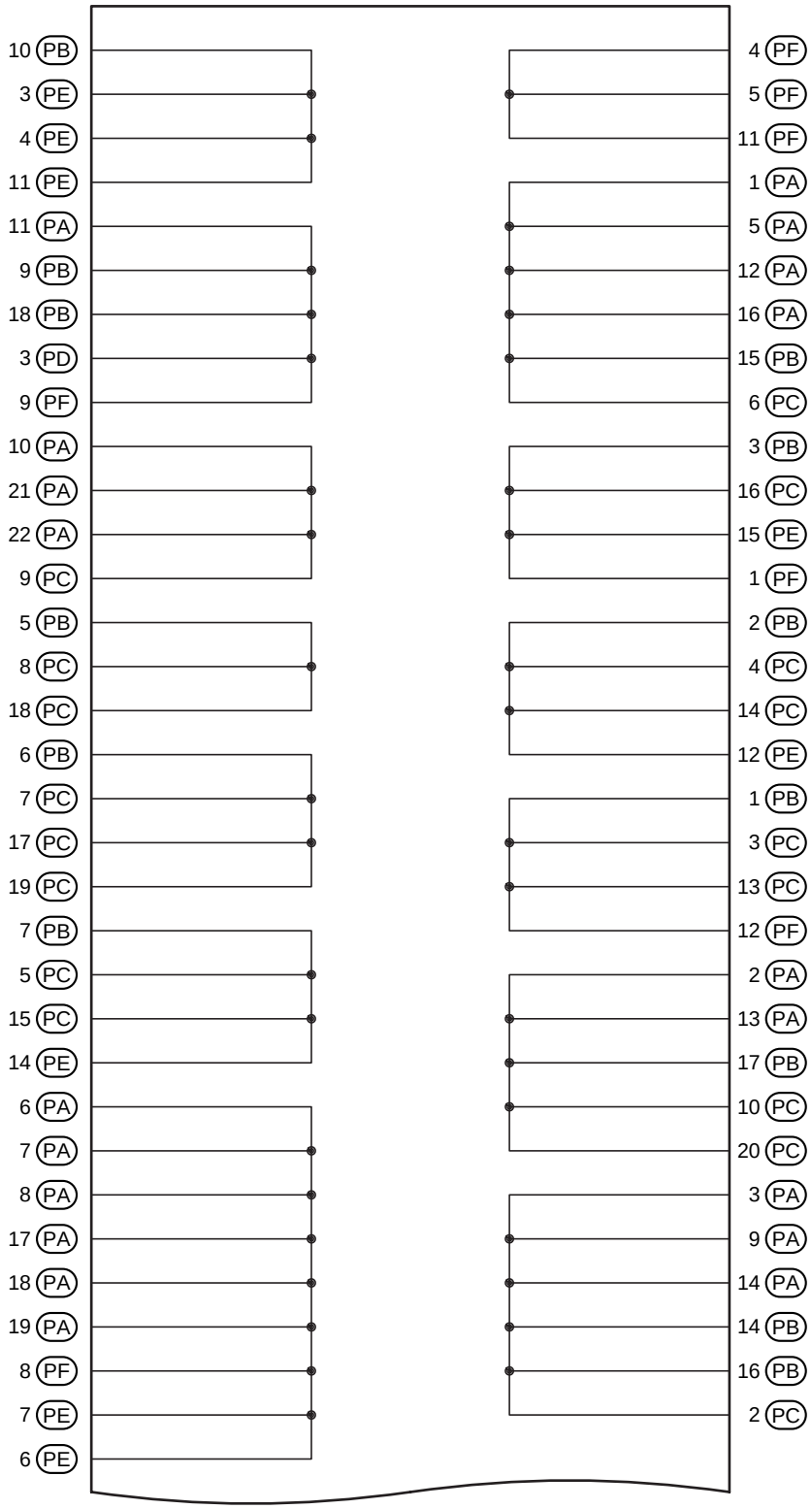

(Cont. Next Page)

(Cont'd)

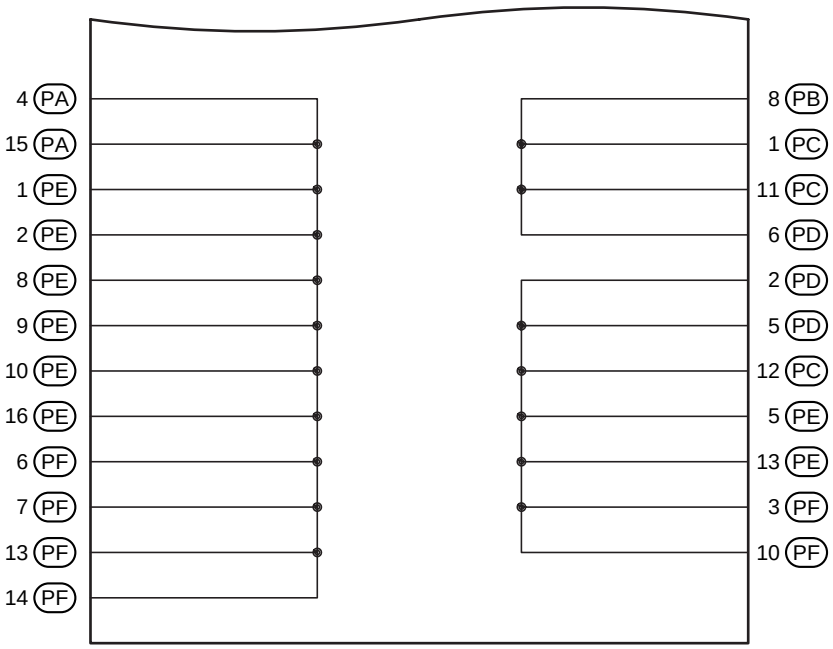
4 PA
15 PA
1 PE
2 PE
8 PE
9 PE
10 PE
16 PE
6 PF
7 PF
13 PF
14 PF
8 PB
1 PC
11 PC
6 PD
2 PD
5 PD
12 PC
5 PE
13 PE
3 PF
10 PF

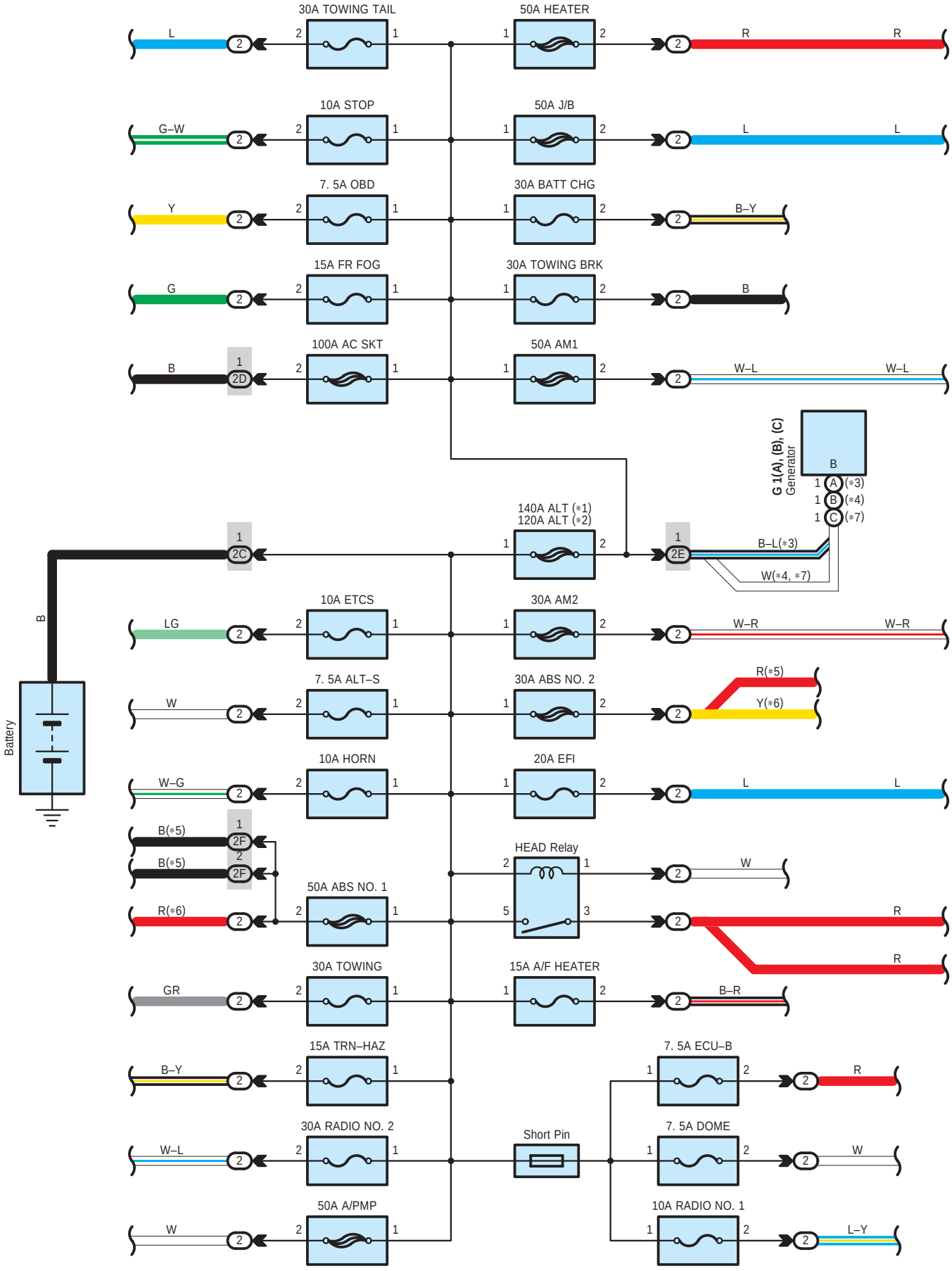
30A TOWING TAIL
50A HEATER
10A STOP
50A J/B
7. 5A OBD
30A BATT CHG
15A FR FOG
30A TOWING BRK
100A AC SKT
50A AM1
G 1(A), (B), (C)
Generator
140A ALT (*1)
120A ALT (*2)
B–L(*3)
W(*4, *7)
10A ETCS
30A AM2
7. 5A ALT–S
30A ABS NO. 2
R(*5)
Y(*6)
10A HORN
20A EFI
HEAD Relay
50A ABS NO. 1
30A TOWING
15A A/F HEATER
15A TRN–HAZ
7. 5A ECU–B
30A RADIO NO. 2
Short Pin
7. 5A DOME
50A A/PMP
10A RADIO NO. 1
Battery

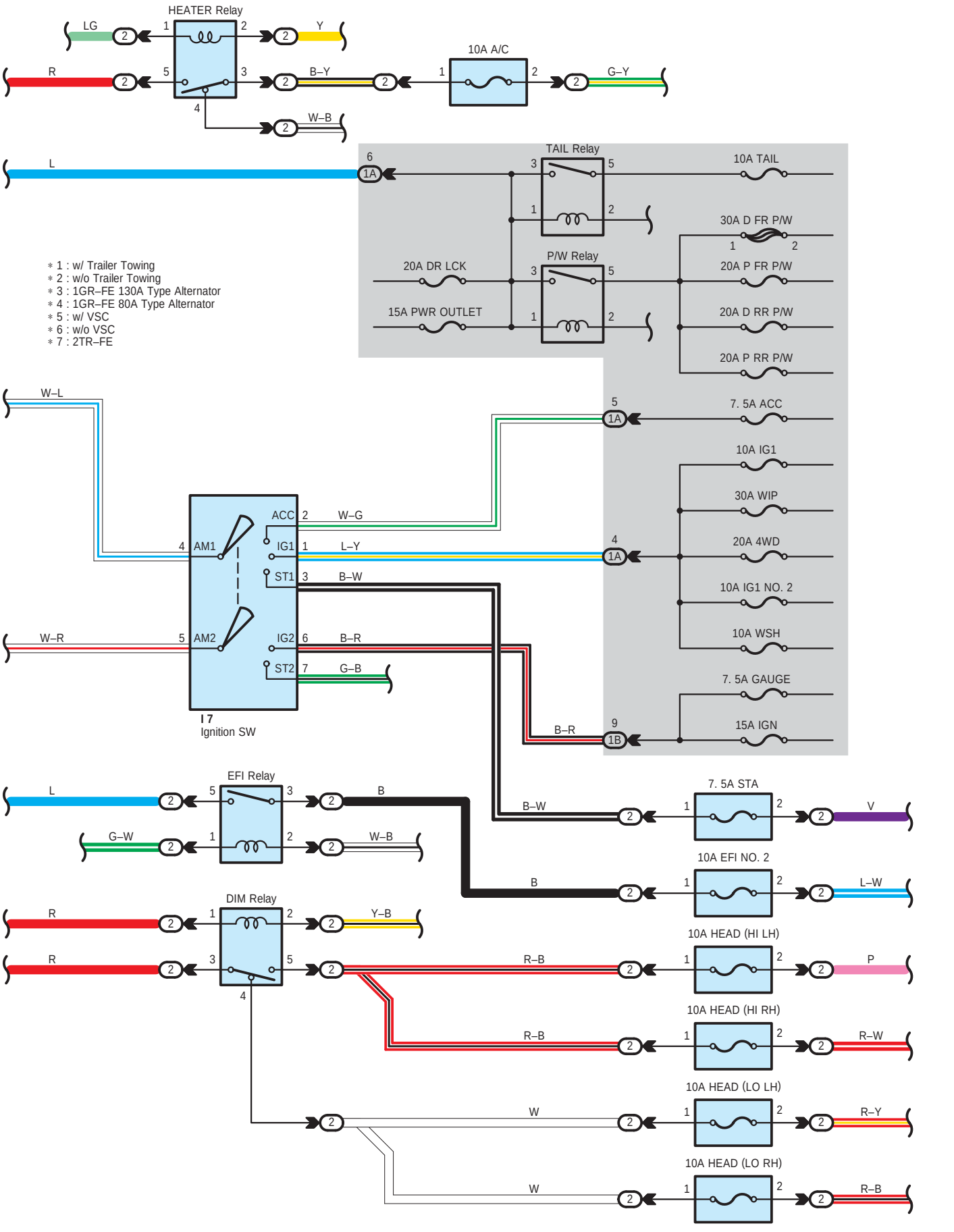
HEATER Relay
LG
Y
R
B–Y
10A A/C
G–Y
W–B
L
TAIL Relay
10A TAIL
30A D FR P/W
P/W Relay
20A DR LCK
20A P FR P/W
15A PWR OUTLET
20A D RR P/W
20A P RR P/W
* 1 : w/ Trailer Towing
* 2 : w/o Trailer Towing
* 3 : 1GR–FE 130A Type Alternator
* 4 : 1GR–FE 80A Type Alternator
* 5 : w/ VSC
* 6 : w/o VSC
* 7 : 2TR–FE
W–L
7. 5A ACC
10A IG1
30A WIP
20A 4WD
10A IG1 NO. 2
10A WSH
7. 5A GAUGE
15A IGN
ACC
W–G
AM1
IG1
L–Y
ST1
B–W
W–R
AM2
IG2
B–R
ST2
G–B
B–R
I 7
Ignition SW
EFI Relay
L
B
G–W
W–B
7. 5A STA
B–W
V
10A EFI NO. 2
B
L–W
DIM Relay
R
Y–B
R
R–B
P
10A HEAD (HI LH)
R–B
R–W
10A HEAD (HI RH)
W
R–Y
10A HEAD (LO LH)
W
R–B
10A HEAD (LO RH)

: Parts Location

Code		See Page	Code		See Page	Code	See Page
G1	A	40 (1GR–FE)	G1	C	42 (2TR–FE)		
	B	40 (1GR–FE)	I7		45		

: Relay Blocks

Code	See Page	Relay Blocks (Relay Block Location)
2	24	Engine Room R/B (Engine Compartment Left)

: Junction Block and Wire Harness Connector

Code	See Page	Junction Block and Wire Harness (Connector Location)
1A	28	Engine Room Main Wire and Driver Side J/B (Lower Finish Panel)
1B		
2C	24	Engine Room Main Wire and Engine Room J/B (Engine Compartment Left)
2D		
2E	24 (1GR–FE)	Engine No.2 Wire and Engine Room J/B (Engine Compartment Left)
	24 (2TR–FE)	Engine Wire and Engine Room J/B (Engine Compartment Left)
2F	25	Engine Room Main Wire and Engine Room J/B (Engine Compartment Left)

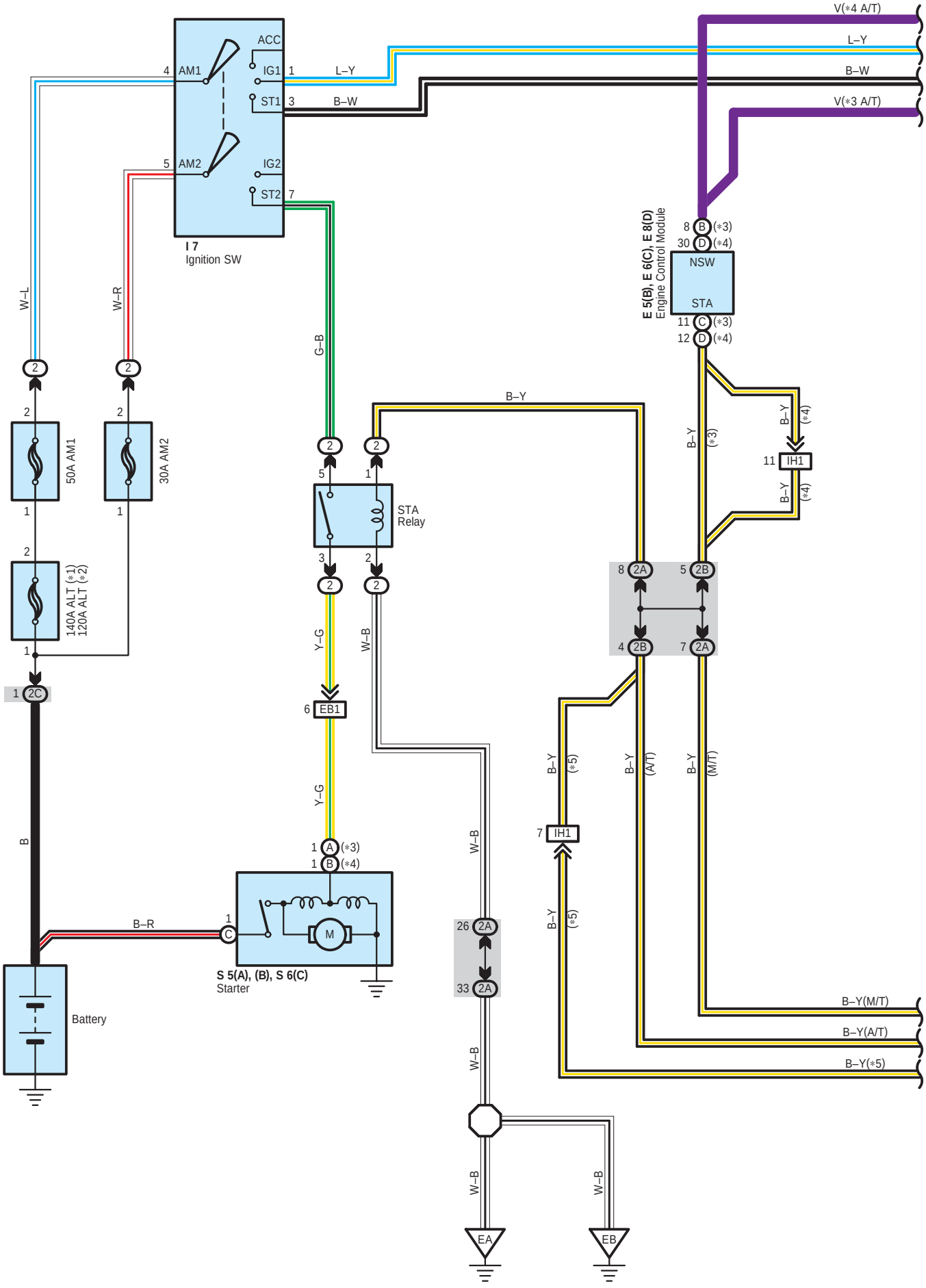
ACC
IG1
ST1
IG2
ST2
AM1
AM2
I 7
Ignition SW
L–Y
B–W
V(*4 A/T)
V(*3 A/T)
E 5(B), E 6(C), E 8(D)
Engine Control Module
NSW
STA
W–L
W–R
G–B
B–Y
50A AM1
30A AM2
140A ALT (*1)
120A ALT (*2)
STA
Relay
Y–G
W–B
EB1
IH1
(*3)
(*4)
(*5)
(A/T)
(M/T)
B
B–R
S 5(A), (B), S 6(C)
Starter
Battery
EA
EB
B–Y(M/T)
B–Y(A/T)
B–Y(*5)

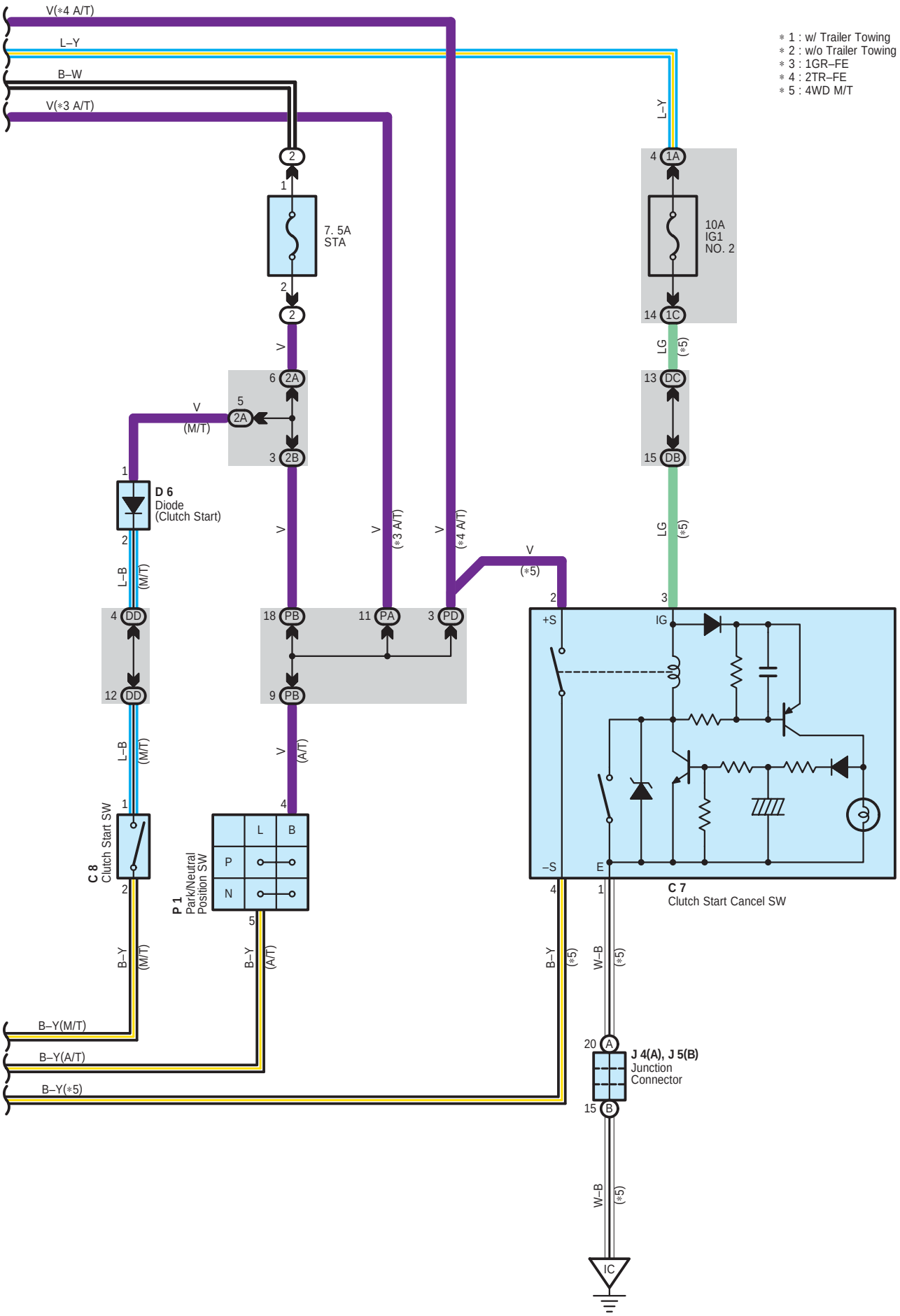
∗ 1 : w/ Trailer Towing
∗ 2 : w/o Trailer Towing
∗ 3 : 1GR–FE
∗ 4 : 2TR–FE
∗ 5 : 4WD M/T
V(∗4 A/T)
L–Y
B–W
V(∗3 A/T)
7. 5A
STA
10A
IG1
NO. 2
D 6
Diode
(Clutch Start)
C 8
Clutch Start SW
P 1
Park/Neutral
Position SW
C 7
Clutch Start Cancel SW
J 4(A), J 5(B)
Junction
Connector
IC
B–Y(M/T)
B–Y(A/T)
B–Y(∗5)

: Parts Location

Code	See Page	Code	See Page	Code	See Page
C7	44	E8 D	44	P1	43 (2TR–FE)
C8	44	I7	45	S5 A	41 (1GR–FE)
D6	44	J4 A	45	S5 B	43 (2TR–FE)
E5 B	44	J5 B	45	S6 C	41 (1GR–FE)
E6 C	44	P1	41 (1GR–FE)		43 (2TR–FE)

: Relay Blocks

Code	See Page	Relay Blocks (Relay Block Location)
2	24	Engine Room R/B (Engine Compartment Left)

: Junction Block and Wire Harness Connector

Code	See Page	Junction Block and Wire Harness (Connector Location)
1A	28	Engine Room Main Wire and Driver Side J/B (Lower Finish Panel)
1C		
2A	24	Engine Room J/B and
2B	24	Engine Wire and Engine Room J/B (Engine Compartment Left)
2C	24	Engine Room Main Wire and Engine Room J/B (Engine Compartment Left)
DB	34	Instrument Panel Wire and Instrument Panel J/B No.1 (Left Kick Panel)
DC	34	Engine Room Main Wire and Instrument Panel J/B No.1 (Left Kick Panel)
DD		
PA	36	Engine Wire and Instrument Panel J/B No.2 (Right Side of Glove Box)
PB		
PD	36	Instrument Panel Wire and Instrument Panel J/B No.2 (Right Side of Glove Box)

: Connector Joining Wire Harness and Wire Harness

Code	See Page	Joining Wire Harness and Wire Harness (Connector Location)
EB1	52 (1GR–FE)	Engine No.2 Wire and Engine Room Main Wire (Inside of Engine Room R/B)
	53 (2TR–FE)	
IH1	55	Engine Wire and Instrument Panel Wire (Right Side of Glove Box)

: Ground Points

Code	See Page	Ground Points Location
EA	52 (1GR–FE)	Front Right Fender
	53 (2TR–FE)	
EB	52 (1GR–FE)	Front Left Fender
	53 (2TR–FE)	
IC	54	Instrument Panel Brace RH

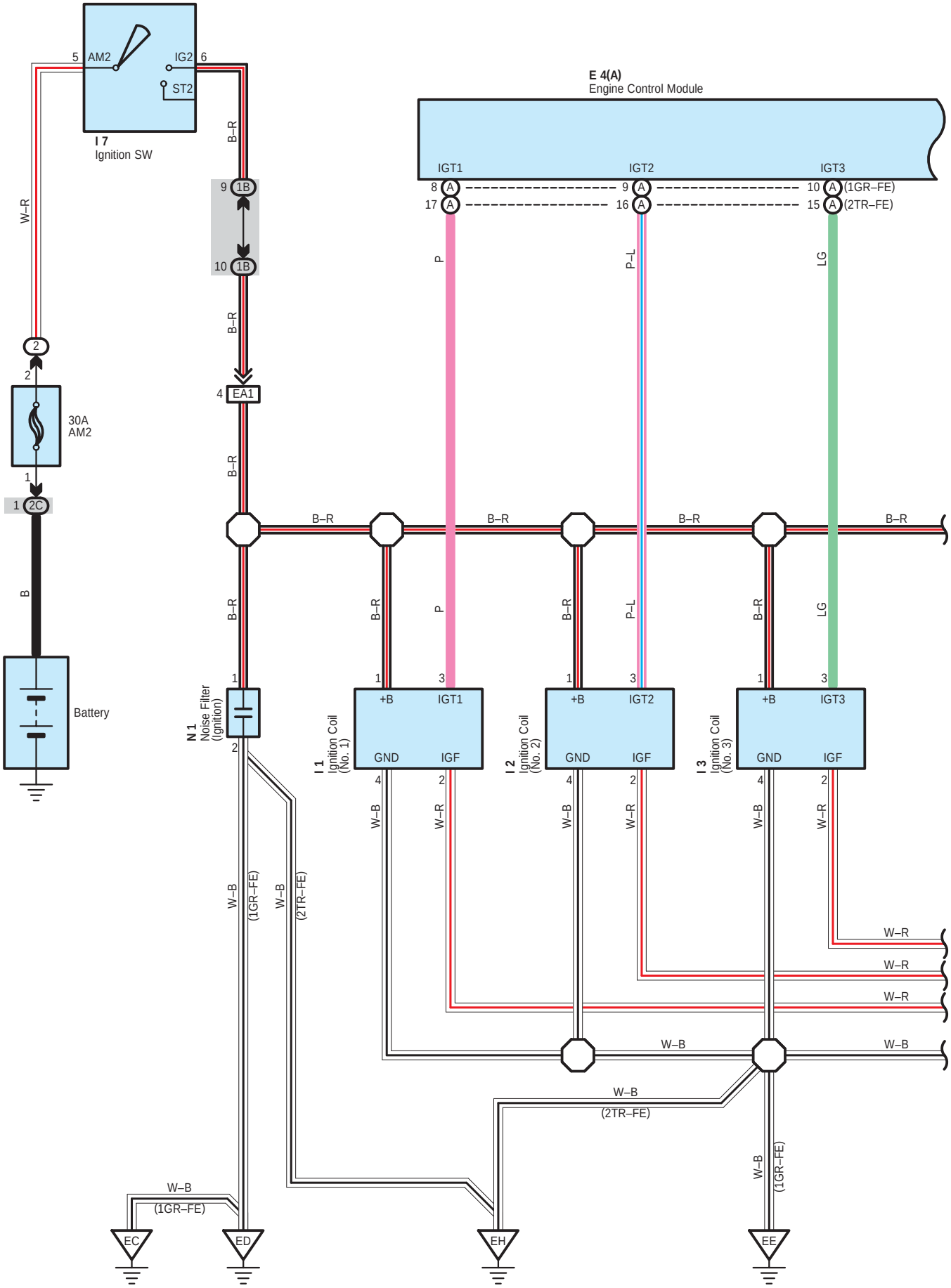
I 7
Ignition SW
5 AM2
IG2 6
ST2
B–R
W–R
9 1B
10 1B
B–R
2
2
30A
AM2
1
1 2C
B
Battery
4 EA1
B–R
B–R
B–R
B–R
B–R
E 4(A)
Engine Control Module
IGT1
IGT2
IGT3
8 A
17 A
9 A
16 A
10 A (1GR–FE)
15 A (2TR–FE)
P
P–L
LG
N 1
Noise Filter
(Ignition)
1
2
I 1
Ignition Coil
(No. 1)
I 2
Ignition Coil
(No. 2)
I 3
Ignition Coil
(No. 3)
+B
IGT1
GND
IGF
+B
IGT2
GND
IGF
+B
IGT3
GND
IGF
W–B
W–R
W–B
(1GR–FE)
W–B
(2TR–FE)
W–R
W–R
W–R
W–B
W–B
W–B
(2TR–FE)
W–B
(1GR–FE)
EC
ED
EH
EE

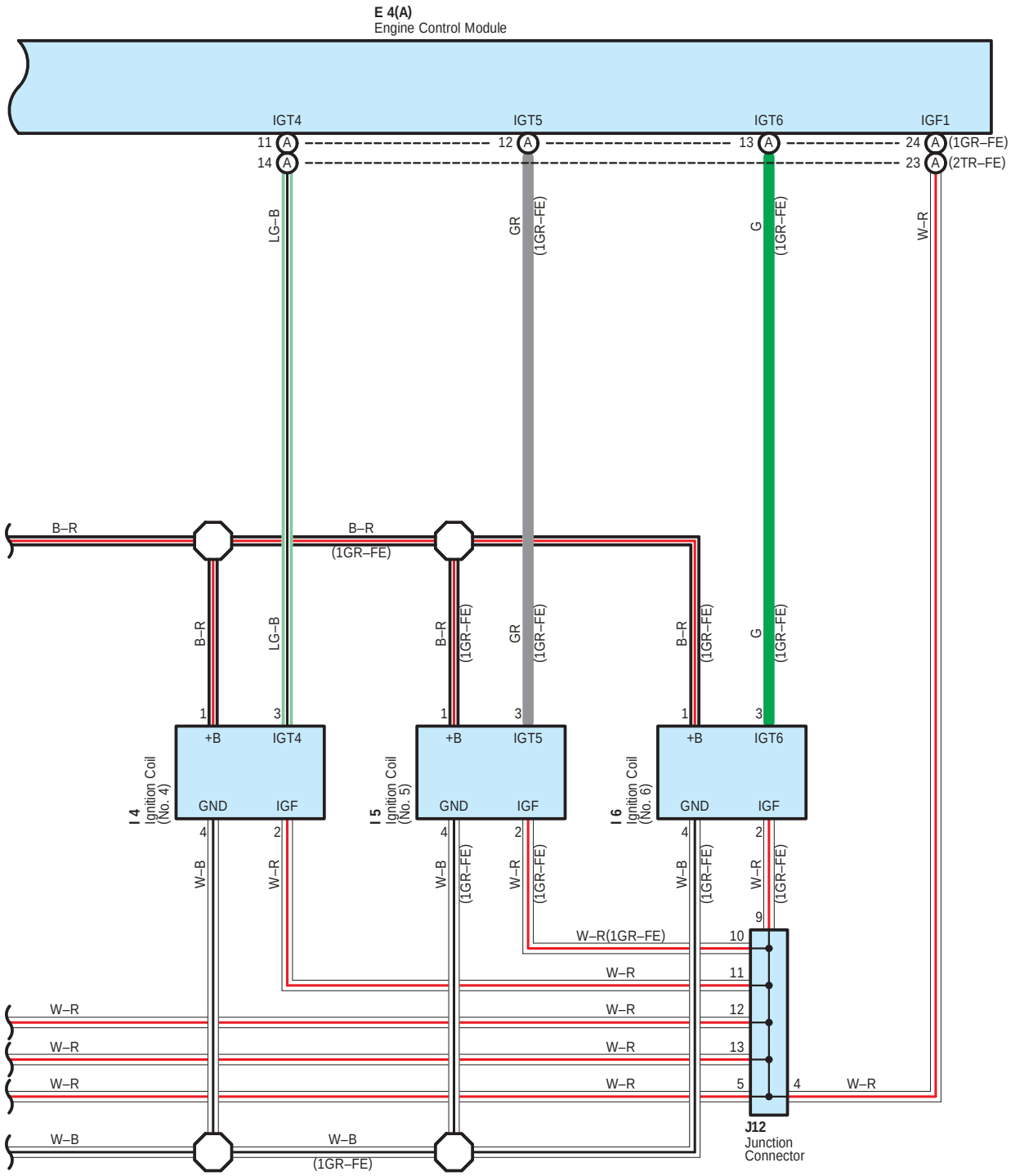
E 4(A)
Engine Control Module
IGT4
IGT5
IGT6
IGF1
11 A
12 A
13 A
24 A (1GR–FE)
14 A
23 A (2TR–FE)
LG–B
GR (1GR–FE)
G (1GR–FE)
W–R
B–R
B–R (1GR–FE)
B–R
LG–B
B–R (1GR–FE)
GR (1GR–FE)
B–R (1GR–FE)
G (1GR–FE)
1
3
+B
IGT4
GND
IGF
I 4 Ignition Coil (No. 4)
I 5 Ignition Coil (No. 5)
I 6 Ignition Coil (No. 6)
4
2
W–B
W–R
W–B (1GR–FE)
W–R (1GR–FE)
9
W–R(1GR–FE)
10
W–R
11
W–R
12
W–R
13
W–R
5
4
W–R
J12
Junction Connector
W–B
W–B (1GR–FE)

Ignition

: Parts Location

Code		See Page	Code	See Page	Code	See Page
E4	A	44	I3	41 (1GR–FE)	I6	41 (1GR–FE)
I1		41 (1GR–FE)		43 (2TR–FE)	I7	45
		43 (2TR–FE)	I4	41 (1GR–FE)	J12	45
I2		41 (1GR–FE)		43 (2TR–FE)	N1	41 (1GR–FE)
		43 (2TR–FE)	I5	41 (1GR–FE)		43 (2TR–FE)

: Relay Blocks

Code	See Page	Relay Blocks (Relay Block Location)
2	24	Engine Room R/B (Engine Compartment Left)

: Junction Block and Wire Harness Connector

Code	See Page	Junction Block and Wire Harness (Connector Location)
1B	28	Engine Room Main Wire and Driver Side J/B (Lower Finish Panel)
2C	24	Engine Room Main Wire and Engine Room J/B (Engine Compartment Left)

: Connector Joining Wire Harness and Wire Harness

Code	See Page	Joining Wire Harness and Wire Harness (Connector Location)
EA1	52 (1GR–FE)	Engine Wire and Engine Room Main Wire (Inside of Engine Room R/B)
	53 (2TR–FE)	

: Ground Points

Code	See Page	Ground Points Location
EC	52 (1GR–FE)	Near the Front Differential
ED	52 (1GR–FE)	Rear Side of Right Bank Cylinder Block
EE		
EH	53 (2TR–FE)	Rear Side of Cylinder Block

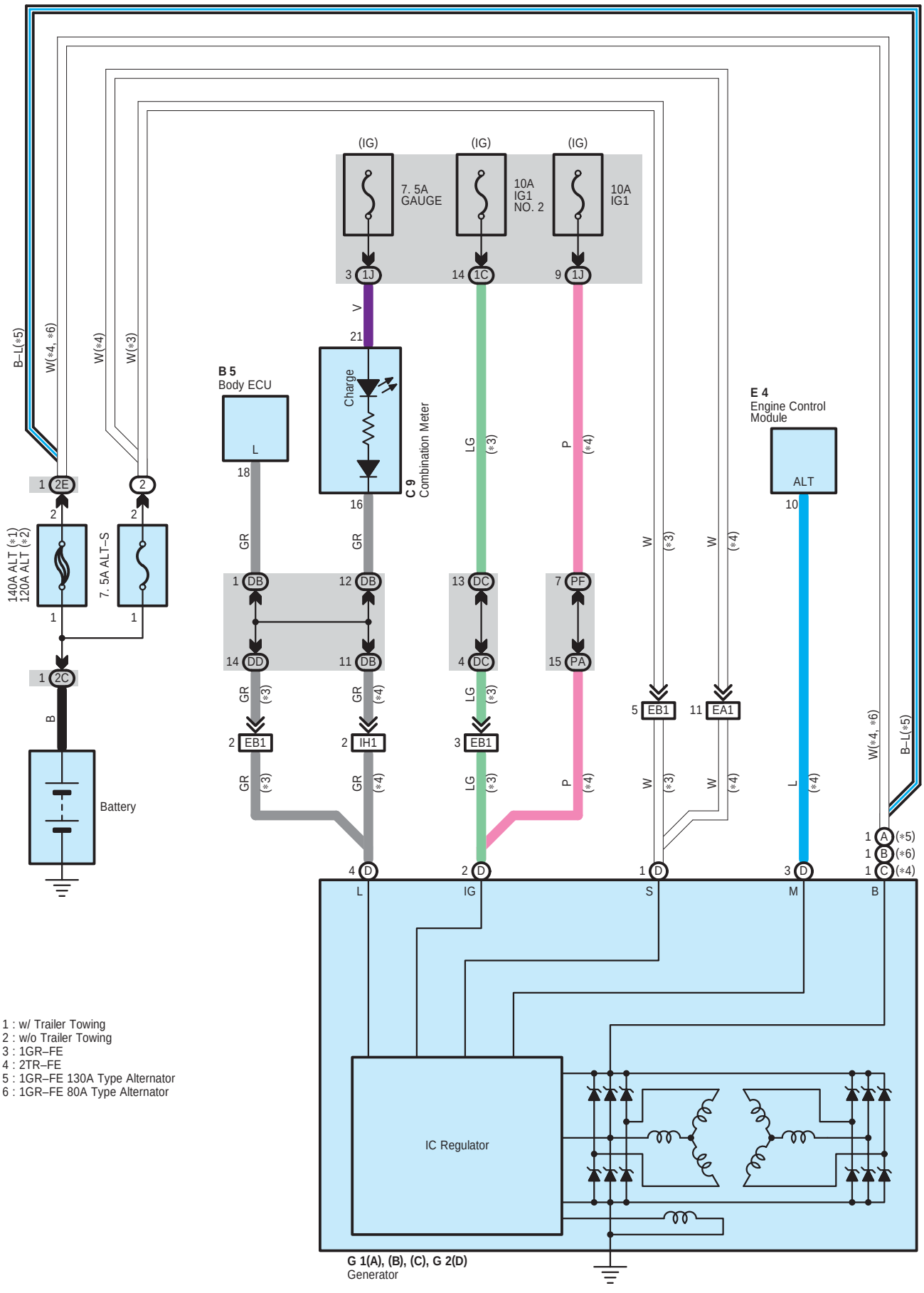

* 1 : w/ Trailer Towing
* 2 : w/o Trailer Towing
* 3 : 1GR–FE
* 4 : 2TR–FE
* 5 : 1GR–FE 130A Type Alternator
* 6 : 1GR–FE 80A Type Alternator

: Parts Location

Code	See Page	Code		See Page	Code		See Page
B5	44	G1	A	40 (1GR–FE)	G2	D	40 (1GR–FE)
C9	44		B	40 (1GR–FE)			42 (2TR–FE)
E4	44		C	42 (2TR–FE)			

: Relay Blocks

Code	See Page	Relay Blocks (Relay Block Location)
2	24	Engine Room R/B (Engine Compartment Left)

: Junction Block and Wire Harness Connector

Code	See Page	Junction Block and Wire Harness (Connector Location)
1C	28	Engine Room Main Wire and Driver Side J/B (Lower Finish Panel)
1J	29	Instrument Panel Wire and Driver Side J/B (Lower Finish Panel)
2C	24	Engine Room Main Wire and Engine Room J/B (Engine Compartment Left)
2E	24 (1GR–FE)	Engine No.2 Wire and Engine Room J/B (Engine Compartment Left)
	24 (2TR–FE)	Engine Wire and Engine Room J/B (Engine Compartment Left)
DB	34	Instrument Panel Wire and Instrument Panel J/B No.1 (Left Kick Panel)
DC	34	Engine Room Main Wire and Instrument Panel J/B No.1 (Left Kick Panel)
DD		
PA	36	Engine Wire and Instrument Panel J/B No.2 (Right Side of Glove Box)
PF	36	Instrument Panel Wire and Instrument Panel J/B No.2 (Right Side of Glove Box)

: Connector Joining Wire Harness and Wire Harness

Code	See Page	Joining Wire Harness and Wire Harness (Connector Location)
EA1	53 (2TR–FE)	Engine Wire and Engine Room Main Wire (Inside of Engine Room R/B)
EB1	52 (1GR–FE)	Engine No.2 Wire and Engine Room Main Wire (Inside of Engine Room R/B)
IH1	55	Engine Wire and Instrument Panel Wire (Right Side of Glove Box)

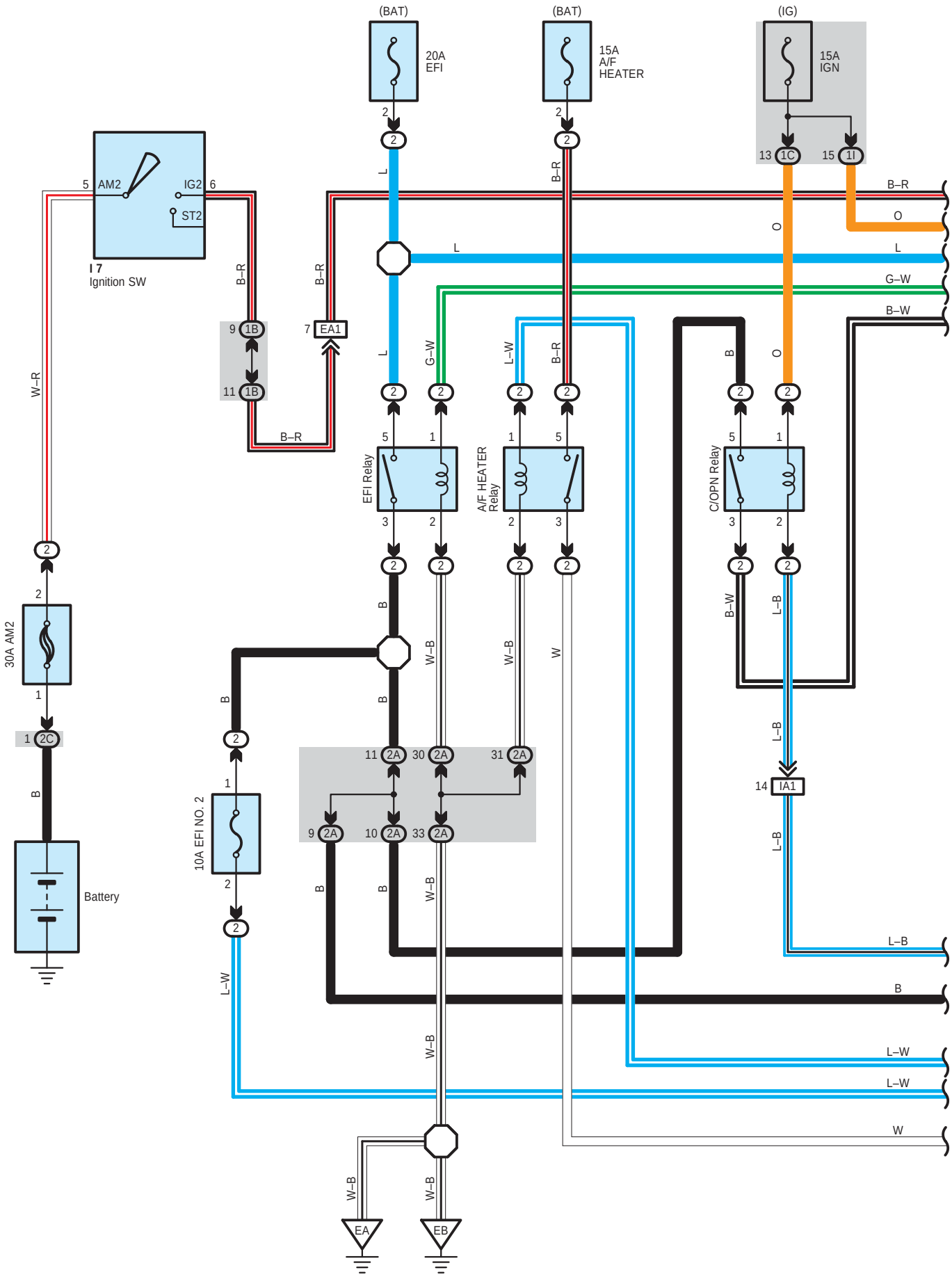
(BAT)
20A
EFI
(BAT)
15A
A/F
HEATER
(IG)
15A
IGN
AM2
IG2
ST2
I 7
Ignition SW
EFI Relay
A/F HEATER
Relay
C/OPN Relay
30A AM2
10A EFI NO. 2
Battery
EA1
IA1
1B
1C
1I
2A
2C
EA
EB
W–R
B–R
L
G–W
L–W
B
B–W
L–B
W
O

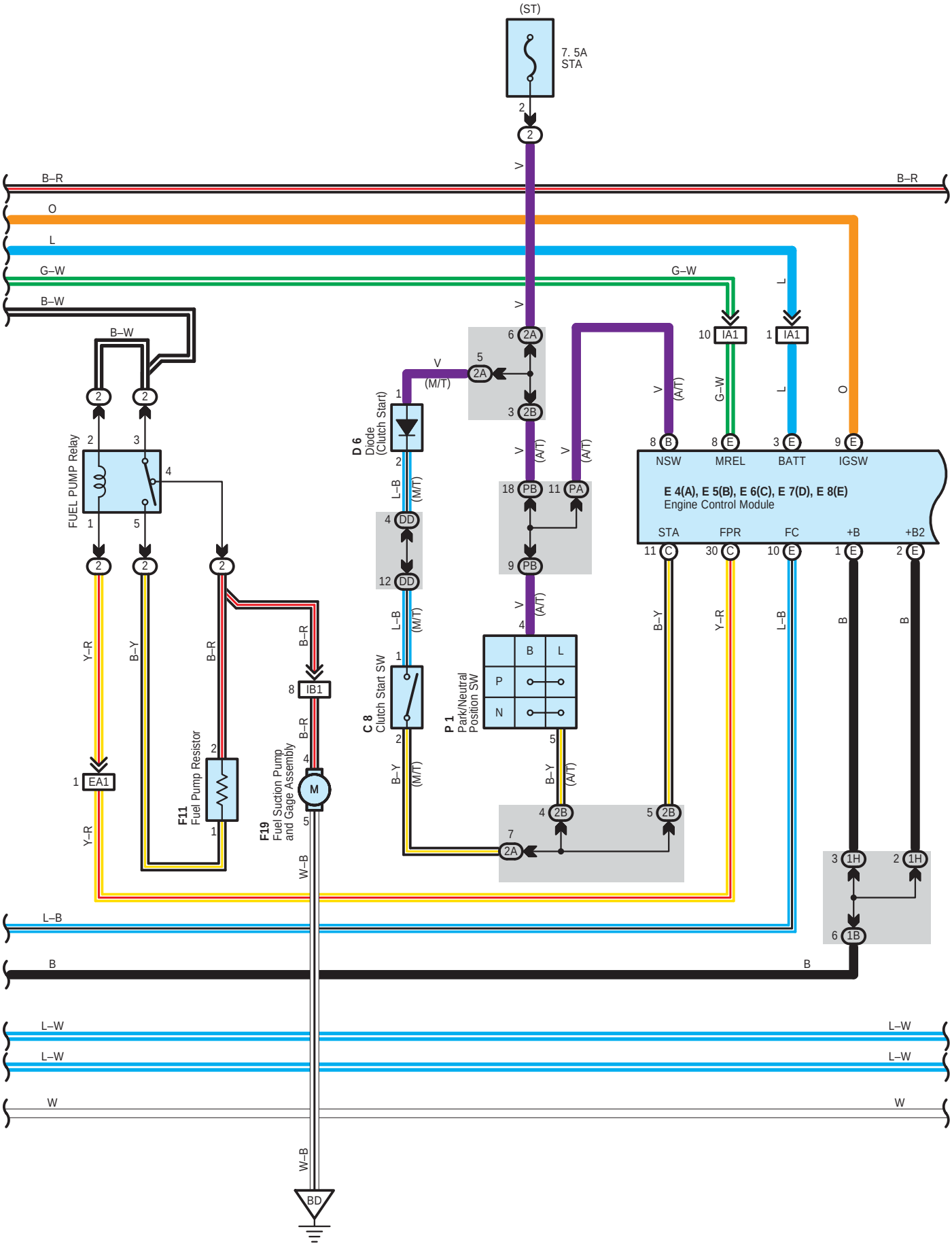
(ST)
7. 5A
STA
B–R
O
L
G–W
B–W
V
L–B
B–Y
B–R
Y–R
W–B
L–W
W
B
FUEL PUMP Relay
F11
Fuel Pump Resistor
F19
Fuel Suction Pump
and Gage Assembly
D 6
Diode
(Clutch Start)
C 8
Clutch Start SW
P 1
Park/Neutral
Position SW
(M/T)
(A/T)
E 4(A), E 5(B), E 6(C), E 7(D), E 8(E)
Engine Control Module
NSW
MREL
BATT
IGSW
STA
FPR
FC
+B
+B2
BD

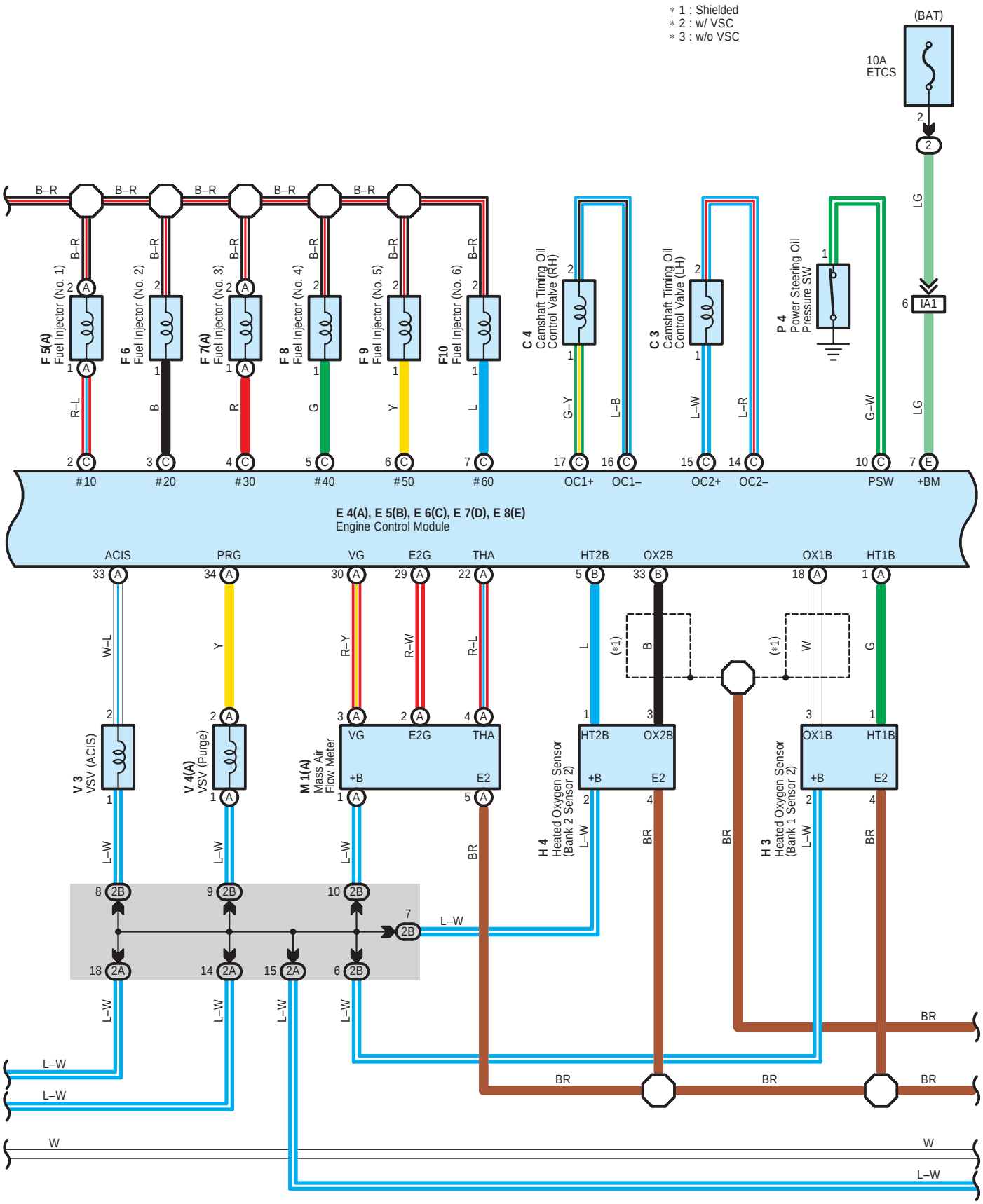
* 1 : Shielded
* 2 : w/ VSC
* 3 : w/o VSC
(BAT)
10A ETCS
IA1
F 5(A) Fuel Injector (No. 1)
F 6 Fuel Injector (No. 2)
F 7(A) Fuel Injector (No. 3)
F 8 Fuel Injector (No. 4)
F 9 Fuel Injector (No. 5)
F10 Fuel Injector (No. 6)
C 4 Camshaft Timing Oil Control Valve (RH)
C 3 Camshaft Timing Oil Control Valve (LH)
P 4 Power Steering Oil Pressure SW
#10
#20
#30
#40
#50
#60
OC1+
OC1–
OC2+
OC2–
PSW
+BM
E 4(A), E 5(B), E 6(C), E 7(D), E 8(E)
Engine Control Module
ACIS
PRG
VG
E2G
THA
HT2B
OX2B
OX1B
HT1B
V 3 VSV (ACIS)
V 4(A) VSV (Purge)
M 1(A) Mass Air Flow Meter
H 4 Heated Oxygen Sensor (Bank 2 Sensor 2)
H 3 Heated Oxygen Sensor (Bank 1 Sensor 2)
+B
E2
(*1)

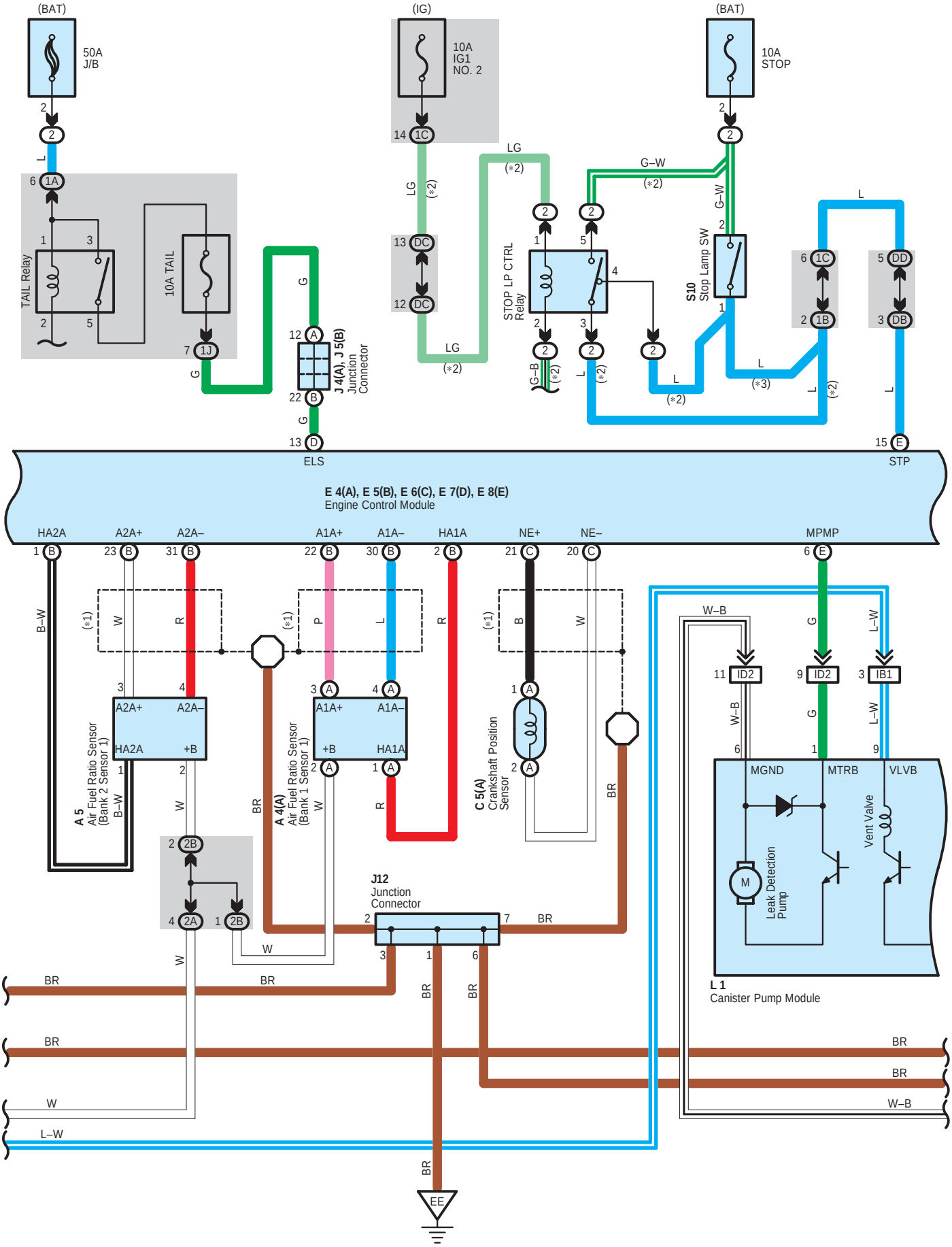
(BAT)
50A
J/B
(IG)
10A
IG1
NO. 2
(BAT)
10A
STOP
TAIL Relay
10A TAIL
STOP LP CTRL
Relay
S10
Stop Lamp SW
J 4(A), J 5(B)
Junction
Connector
ELS
STP
E 4(A), E 5(B), E 6(C), E 7(D), E 8(E)
Engine Control Module
HA2A
A2A+
A2A–
A1A+
A1A–
HA1A
NE+
NE–
MPMP
A 5
Air Fuel Ratio Sensor
(Bank 2 Sensor 1)
A 4(A)
Air Fuel Ratio Sensor
(Bank 1 Sensor 1)
C 5(A)
Crankshaft Position
Sensor
J12
Junction
Connector
MGND
MTRB
VLVB
Vent Valve
Leak Detection
Pump
L 1
Canister Pump Module
EE

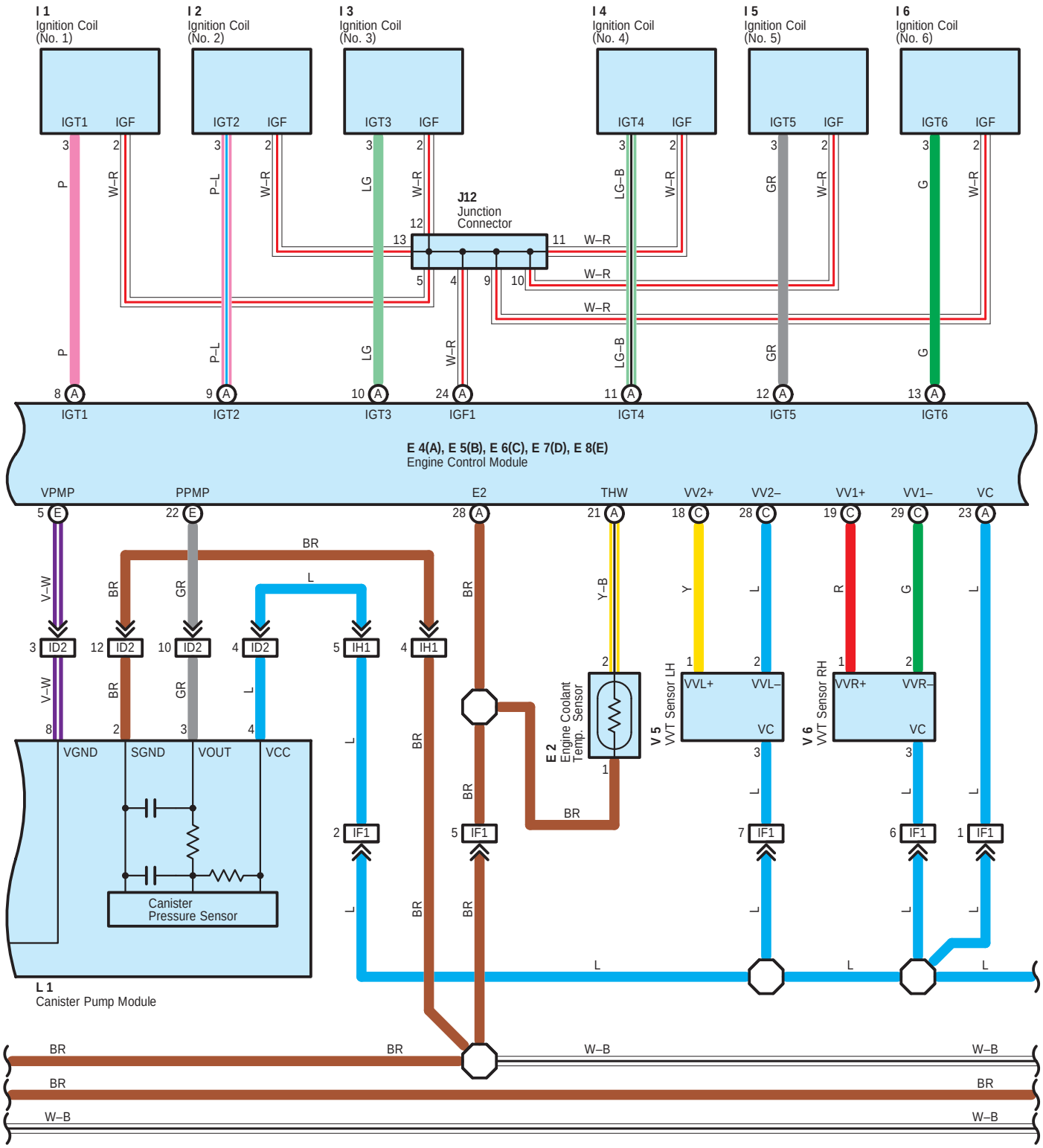
I 1
Ignition Coil
(No. 1)
I 2
Ignition Coil
(No. 2)
I 3
Ignition Coil
(No. 3)
I 4
Ignition Coil
(No. 4)
I 5
Ignition Coil
(No. 5)
I 6
Ignition Coil
(No. 6)
IGT1
IGF
IGT2
IGF
IGT3
IGF
IGT4
IGF
IGT5
IGF
IGT6
IGF
J12
Junction
Connector
E 4(A), E 5(B), E 6(C), E 7(D), E 8(E)
Engine Control Module
VPMP
PPMP
E2
THW
VV2+
VV2–
VV1+
VV1–
VC
VGND
SGND
VOUT
VCC
Canister
Pressure Sensor
L 1
Canister Pump Module
E 2
Engine Coolant
Temp. Sensor
V 5
VVT Sensor LH
V 6
VVT Sensor RH
VVL+
VVL–
VVR+
VVR–
ID2
IH1
IF1

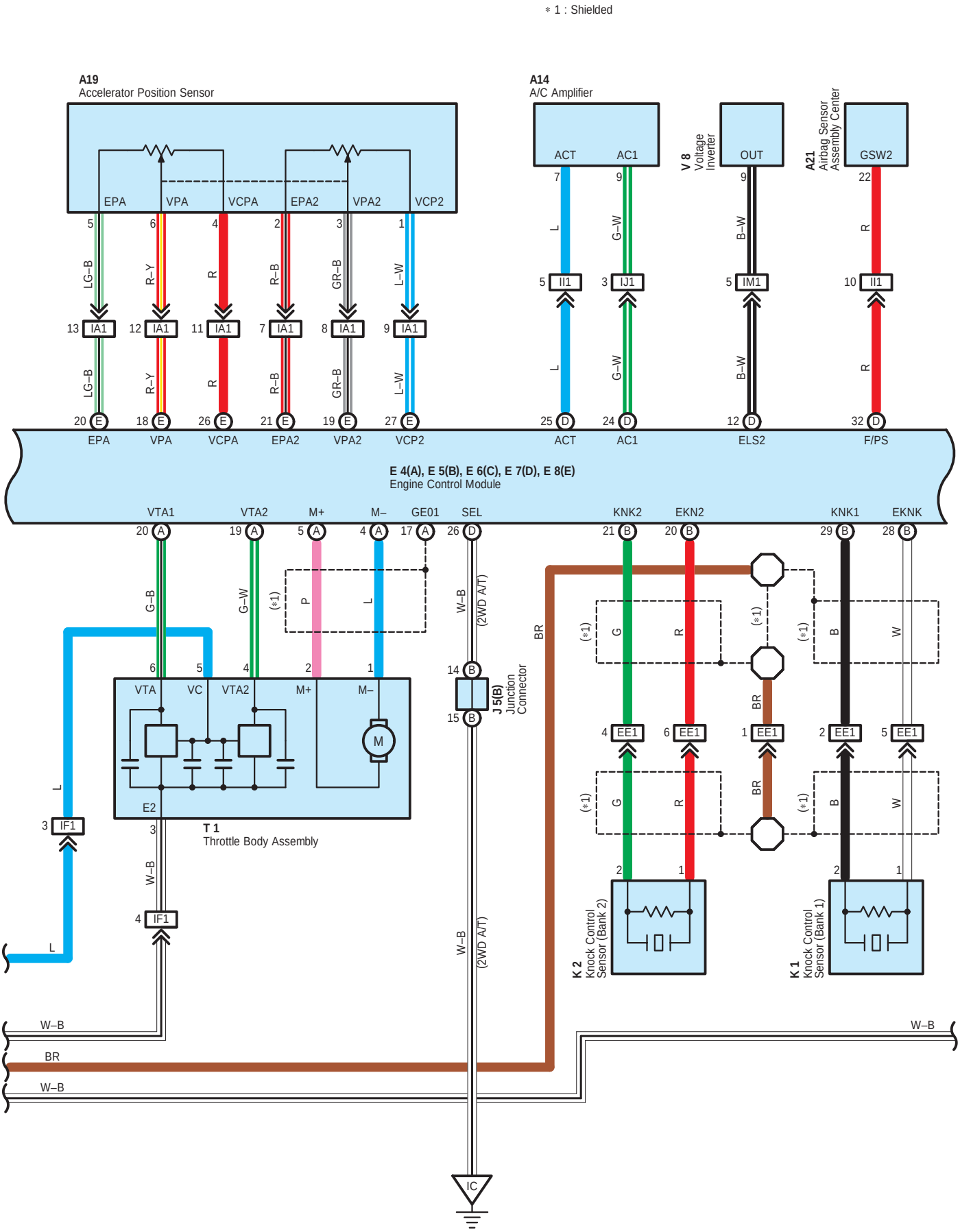
* 1 : Shielded
A19
Accelerator Position Sensor
EPA
VPA
VCPA
EPA2
VPA2
VCP2
A14
A/C Amplifier
ACT
AC1
V 8
Voltage Inverter
OUT
A21
Airbag Sensor Assembly Center
GSW2
E 4(A), E 5(B), E 6(C), E 7(D), E 8(E)
Engine Control Module
ELS2
F/PS
VTA1
VTA2
M+
M–
GE01
SEL
KNK2
EKN2
KNK1
EKNK
J 5(B)
Junction Connector
(2WD A/T)
T 1
Throttle Body Assembly
VTA
VC
E2
K 2
Knock Control Sensor (Bank 2)
K 1
Knock Control Sensor (Bank 1)
IC

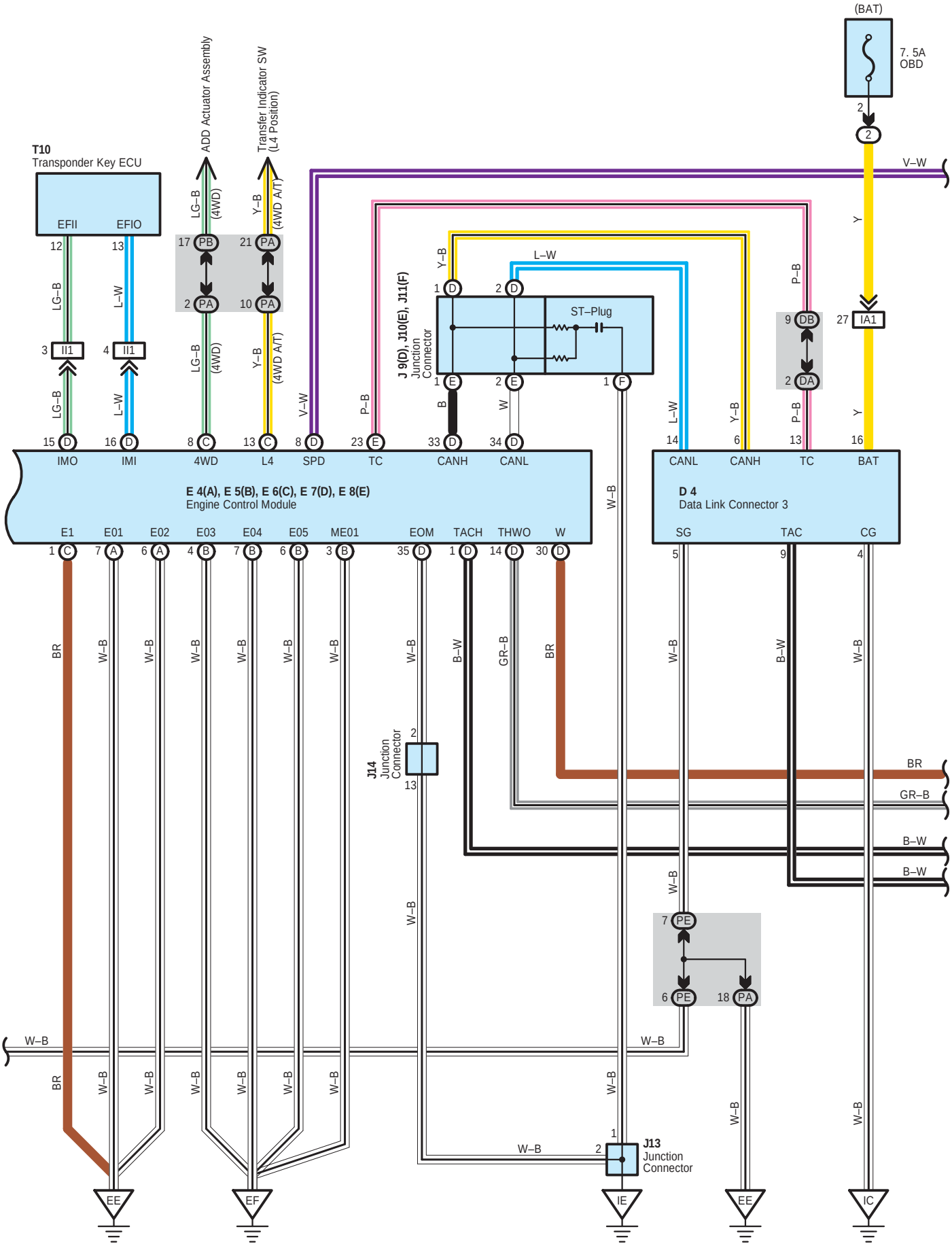
(BAT)
7. 5A
OBD
V–W
T10
Transponder Key ECU
EFII
EFIO
ADD Actuator Assembly
Transfer Indicator SW
(L4 Position)
LG–B
(4WD)
Y–B
(4WD A/T)
L–W
ST–Plug
J 9(D), J10(E), J11(F)
Junction
Connector
P–B
Y
IA1
DB
DA
IMO
IMI
4WD
L4
SPD
TC
CANH
CANL
BAT
E 4(A), E 5(B), E 6(C), E 7(D), E 8(E)
Engine Control Module
D 4
Data Link Connector 3
SG
TAC
CG
E1
E01
E02
E03
E04
E05
ME01
EOM
TACH
THWO
W
BR
GR–B
B–W
W–B
J14
Junction
Connector
PE
PA
J13
Junction
Connector
EE
EF
IE
IC

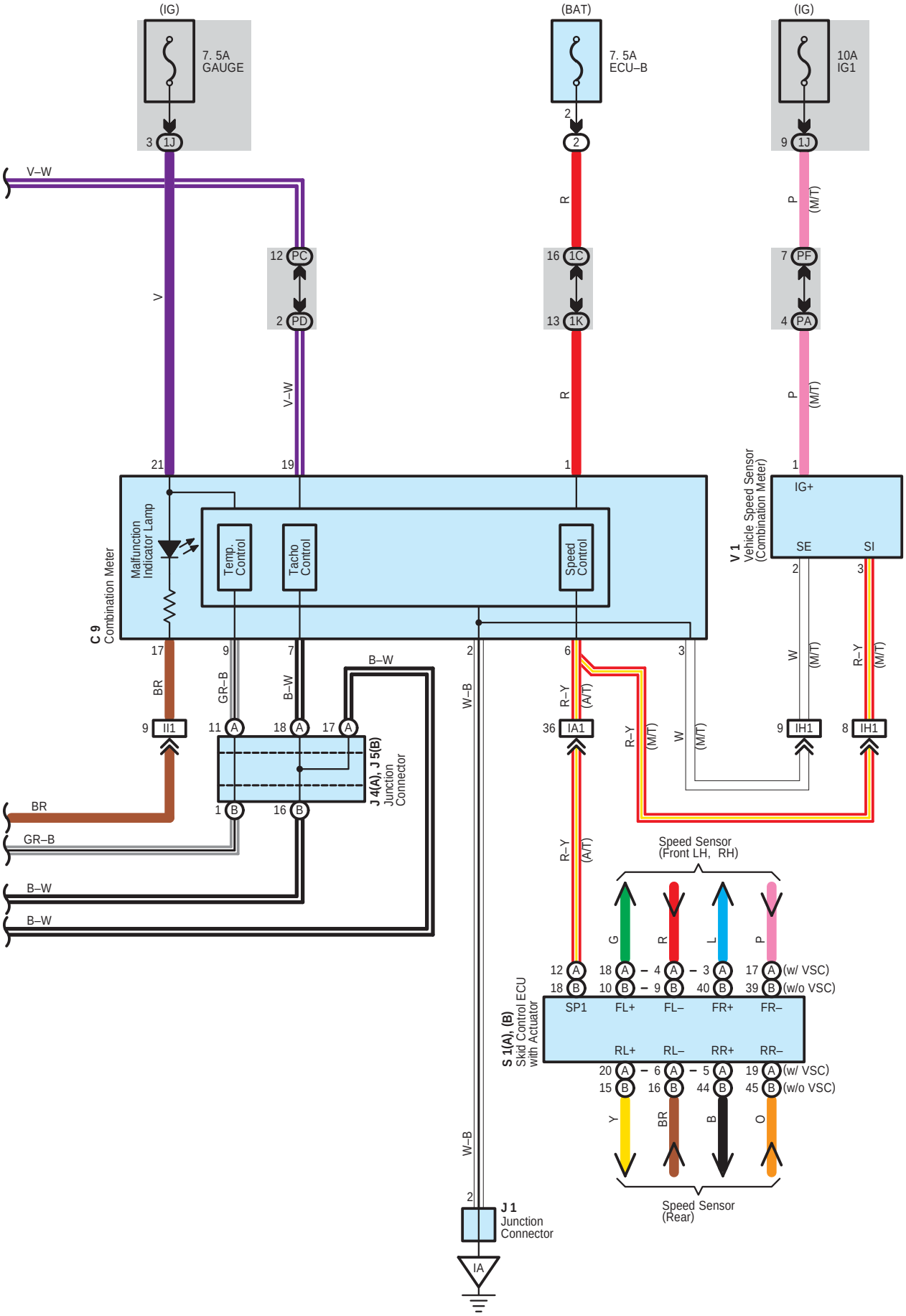
(IG)
7. 5A
GAUGE
3 1J
(BAT)
7. 5A
ECU–B
2
2
(IG)
10A
IG1
9 1J
V–W
V
12 PC
2 PD
V–W
16 1C
13 1K
R
R
7 PF
4 PA
P
(M/T)
P
(M/T)
21
19
1
1
C 9
Combination Meter
Malfunction
Indicator Lamp
Temp.
Control
Tacho
Control
Speed
Control
V 1
Vehicle Speed Sensor
(Combination Meter)
IG+
SE
SI
2
3
17
9
7
2
6
3
BR
GR–B
B–W
B–W
W–B
R–Y
(A/T)
W
(M/T)
R–Y
(M/T)
9 II1
11 A
18 A
17 A
36 IA1
9 IH1
8 IH1
J 4(A), J 5(B)
Junction
Connector
1 B
16 B
BR
GR–B
B–W
B–W
R–Y
(A/T)
Speed Sensor
(Front LH, RH)
G
R
L
P
12 A
18 B
18 A
10 B
4 A
9 B
3 A
40 B
17 A
39 B
(w/ VSC)
(w/o VSC)
S 1(A), (B)
Skid Control ECU
with Actuator
SP1
FL+
FL–
FR+
FR–
RL+
RL–
RR+
RR–
20 A
15 B
6 A
16 B
5 A
44 B
19 A
45 B
(w/ VSC)
(w/o VSC)
Y
BR
B
O
Speed Sensor
(Rear)
W–B
2
J 1
Junction
Connector
IA

System Outline

The engine control system utilizes a microcomputer and maintains overall control of the engine, transmission etc. An outline of the engine control is given here.

1. Input Signals

(1) Engine coolant temp. signal circuit

The engine coolant temp. sensor detects the engine coolant temp. and has a built–in thermistor with a resistance which varies according to the engine coolant temp. The engine coolant temp. is input into TERMINAL THW of the engine control module as a control signal.

(2) Intake air temp. signal circuit

The intake air temp. sensor is installed in the mass air flow meter and detects the intake air temp., which is input as a control signal to TERMINAL THA of the engine control module.

(3) Oxygen sensor signal circuit

The oxygen density in the exhaust emission is detected and is input as a control signal from the heated oxygen sensors to TERMINALS OX1B and OX2B of the engine control module.

(4) RPM signal circuit

The camshaft position is detected by the VVT sensor LH and RH, and is input into TERMINALS VV1+ and VV2+ of the engine control module as a control signal. Also, the engine RPM is detected by the crankshaft position sensor and the signal is input into TERMINAL NE+ of the engine control module.

(5) Throttle position sensor signal circuit

The throttle position sensor detects the throttle valve opening angle as a control signal, which is input into TERMINALS VTA1 and VTA2 of the engine control module.

(6) Vehicle speed circuit

The vehicle speed sensor detects the vehicle speed, and the signal is input into TERMINAL SPD of the engine control module via the combination meter, from TERMINAL SP1 of the skid control ECU with actuator. (A/T)

The vehicle speed is detected by the vehicle speed sensor installed in the transaxle and the signal is input to TERMINAL SPD of the engine control module via the combination meter. (M/T)

(7) Battery signal circuit

Voltage is constantly applied to TERMINAL BATT of the engine control module. When the ignition SW is turned on, the voltage for engine control module start up power supply is applied through the EFI relay, to TERMINALS +B and +B2 of the engine control module. The current from the IGN fuse flows to TERMINAL IGSW of the engine control module, and voltage is constantly applied to TERMINAL +BM.

(8) Intake air volume signal circuit

The intake air volume is detected by the mass air flow meter, and is input as a control signal to TERMINAL VG of the engine control module.

(9) Stop lamp SW signal circuit

The stop lamp SW is used to detect whether the vehicle is braking or not, and the signal is input into TERMINAL STP of the engine control module as a control signal.

(10) Starter signal circuit

To confirm whether the engine is cranking, the voltage applied to the starter motor when the engine is cranking is detected, and is input into TERMINAL STA of the engine control module as a control signal.

(11) Engine knock signal circuit

Engine knocking is detected by the knock sensors, and is input into TERMINALS KNK1 and KNK2 of the engine control module as a control signal.

(12) A/C SW signal system

The operating voltage of the A/C magnetic clutch is detected and input in the form of a control signal to TERMINAL AC1 of the engine control module.

(13) Air fuel ratio signal circuit

The air fuel ratio is detected and input as a control signal into TERMINALS A1A+, A2A+ of the engine control module.

2. Control System

* SFI system
  The SFI system monitors the engine condition through the signals input from each sensors to the engine control module. The control signal is sent to the engine control module TERMINALS #10, #20, #30, #40, #50 and #60 to operate the injector (Fuel injection). The SFI system controls the fuel injection by the engine control module in response to the driving conditions.
* ESA system
  The ESA system monitors the engine condition through the signals input from each sensors to the engine control module. The best ignition timing is decided according to this data and the data memorized in the engine control module. The control signal is output to TERMINALS IGT1, IGT2, IGT3, IGT4, IGT5 and IGT6, and these signals control the igniter to provide the best ignition timing.
* Heated oxygen sensor heater control system
  The heated oxygen sensor heater control system turns the heater on when the intake air volume is low (Temp. of exhaust emission is low), and warms up the heated oxygen sensors to improve their detection performance. The engine control module evaluates the signals from each sensors, and outputs current to TERMINALS HT1B or HT2B to control the heater.
* Air fuel ratio sensor heater control system
  The air fuel ratio sensor heater control system turns the heater on when the intake air volume is low (Temp. of exhaust emission is low), and warms up the air fuel ratio sensor to improve detection performance of the sensor.
  The engine control module evaluates the signals from each sensor, current is output to TERMINALS HA1A and HA2A, controlling the heater.
* Fuel pump control system
  The engine control module supplies current to TERMINAL FPR, and controls the operation speed of the fuel pump with the FUEL PUMP relay.
* ACIS
  The ACIS includes a valve in the bulkhead separating the surge tank into two parts. This valve is opened and closed in accordance with the driving conditions to control the intake manifold length in two stages, for increased engine output in all ranges from low to high speeds.
* ETCS–i
  The ETCS–i controls the engine output at its optimal level in accordance with the opening of the accelerator pedal, under all driving conditions.
* VVT–i
  Controls the intake camshaft to an optimal valve timing in accordance with the engine condition.

3. Diagnosis System

When there is a malfunction in the engine control module signal system, the malfunctioning system is recorded in the memory. The malfunctioning system can be found by reading the code displayed on the malfunction indicator lamp.

4. Fail–Safe System

When a malfunction has occurred in any system, there is a possibility of causing engine trouble due to continued control based on that system. In that case, the fail–safe system either controls the system using the data (Standard values) recorded in the engine control module memory, or else stops the engine.

○ : Parts Location

Code	See Page	Code	See Page	Code	See Page
A4 A	40 (1GR–FE)	F9	40 (1GR–FE)	J14	45
A5	40 (1GR–FE)	F10	40 (1GR–FE)	K1	41 (1GR–FE)
A14	44	F11	40 (1GR–FE)	K2	41 (1GR–FE)
A19	44	F19	46 (*1)	L1	46 (*1)
A21	44		48 (*2)		48 (*2)
C3	40 (1GR–FE)	H3	41 (1GR–FE)	M1 A	41 (1GR–FE)
C4	40 (1GR–FE)	H4	41 (1GR–FE)	P1	41 (1GR–FE)
C5 A	40 (1GR–FE)	I1	41 (1GR–FE)	P4	41 (1GR–FE)
C8	44	I2	41 (1GR–FE)	S1 A	41 (1GR–FE)
C9	44	I3	41 (1GR–FE)	S1 B	41 (1GR–FE)
D4	44	I4	41 (1GR–FE)	S10	45
D6	44	I5	41 (1GR–FE)	T1	41 (1GR–FE)
E2	40 (1GR–FE)	I6	41 (1GR–FE)	T10	45
E4 A	44	I7	45	V1	41 (1GR–FE)
E5 B	44	J1	45	V3	41 (1GR–FE)
E6 C	44	J4 A	45	V4 A	41 (1GR–FE)
E7 D	44	J5 B	45	V5	41 (1GR–FE)
E8 E	44	J9 D	45	V6	41 (1GR–FE)
F5 A	40 (1GR–FE)	J10 E	45	V8	47 (*1)
F6	40 (1GR–FE)	J11 F	45		48 (*2)
F7 A	40 (1GR–FE)	J12	45		
F8	40 (1GR–FE)	J13	45		

▭ : Relay Blocks

Code	See Page	Relay Blocks (Relay Block Location)
2	24	Engine Room R/B (Engine Compartment Left)

▭ : Junction Block and Wire Harness Connector

Code	See Page	Junction Block and Wire Harness (Connector Location)
1A	28	Engine Room Main Wire and Driver Side J/B (Lower Finish Panel)
1B		
1C		
1H	29	Instrument Panel Wire and Driver Side J/B (Lower Finish Panel)
1I		
1J		
1K		
2A	24	Engine Room J/B (Engine Compartment Left)
2B	24	Engine Wire and Engine Room J/B (Engine Compartment Left)
2C	24	Engine Room Main Wire and Engine Room J/B (Engine Compartment Left)
DA	34	Instrument Panel Wire and Instrument Panel J/B No.1 (Left Kick Panel)
DB		
DC	34	Engine Room Main Wire and Instrument Panel J/B No.1 (Left Kick Panel)
DD		
PA	36	Engine Wire and Instrument Panel J/B No.2 (Right Side of Glove Box)
PB		
PC	36	Instrument Panel Wire and Instrument Panel J/B No.2 (Right Side of Glove Box)
PD		
PE		
PF		

* 1 : Double Cab * 2 : Access Cab * 3 : Regular Cab * 4 : Separate Seat * 5 : Bench Seat

: Connector Joining Wire Harness and Wire Harness

Code	See Page	Joining Wire Harness and Wire Harness (Connector Location)
EA1	52 (1GR–FE)	Engine Wire and Engine Room Main Wire (Inside of Engine Room R/B)
EE1	52 (1GR–FE)	Engine Wire and Sensor Wire (Rear Side of Right Bank Cylinder Block)
IA1	54	Instrument Panel Wire and Engine Room Main Wire (Left Kick Panel)
IB1	54	Frame Wire and Engine Room Main Wire (Left Kick Panel)
ID2	54	Frame Wire and Instrument Panel Wire (Left Kick Panel)
IF1	55	Engine Wire and Engine Wire (Behind the Glove Box)
IH1	55	Engine Wire and Instrument Panel Wire (Right Side of Glove Box)
II1	55	Instrument Panel Wire and Instrument Panel Wire (Instrument Panel Brace RH)
IJ1	55	Instrument Panel Wire and Instrument Panel Wire (Right Kick Panel)
IM1	55	Floor No.3 Wire and Instrument Panel Wire (Under the Console Box)

: Ground Points

Code	See Page	Ground Points Location
EA	52 (1GR–FE)	Front Right Fender
EB	52 (1GR–FE)	Front Left Fender
EE	52 (1GR–FE)	Rear Side of Right Bank Cylinder Block
EF	52 (1GR–FE)	Rear Side of Left Bank Cylinder Block
IA	54	Left Kick Panel
IC	54	Instrument Panel Brace RH
IE	54	Right Kick Panel
BD	56 (*1) 57 (*2)	Near the Rear Differential

* 1 : Double Cab * 2 : Access Cab * 3 : Regular Cab * 4 : Separate Seat * 5 : Bench Seat

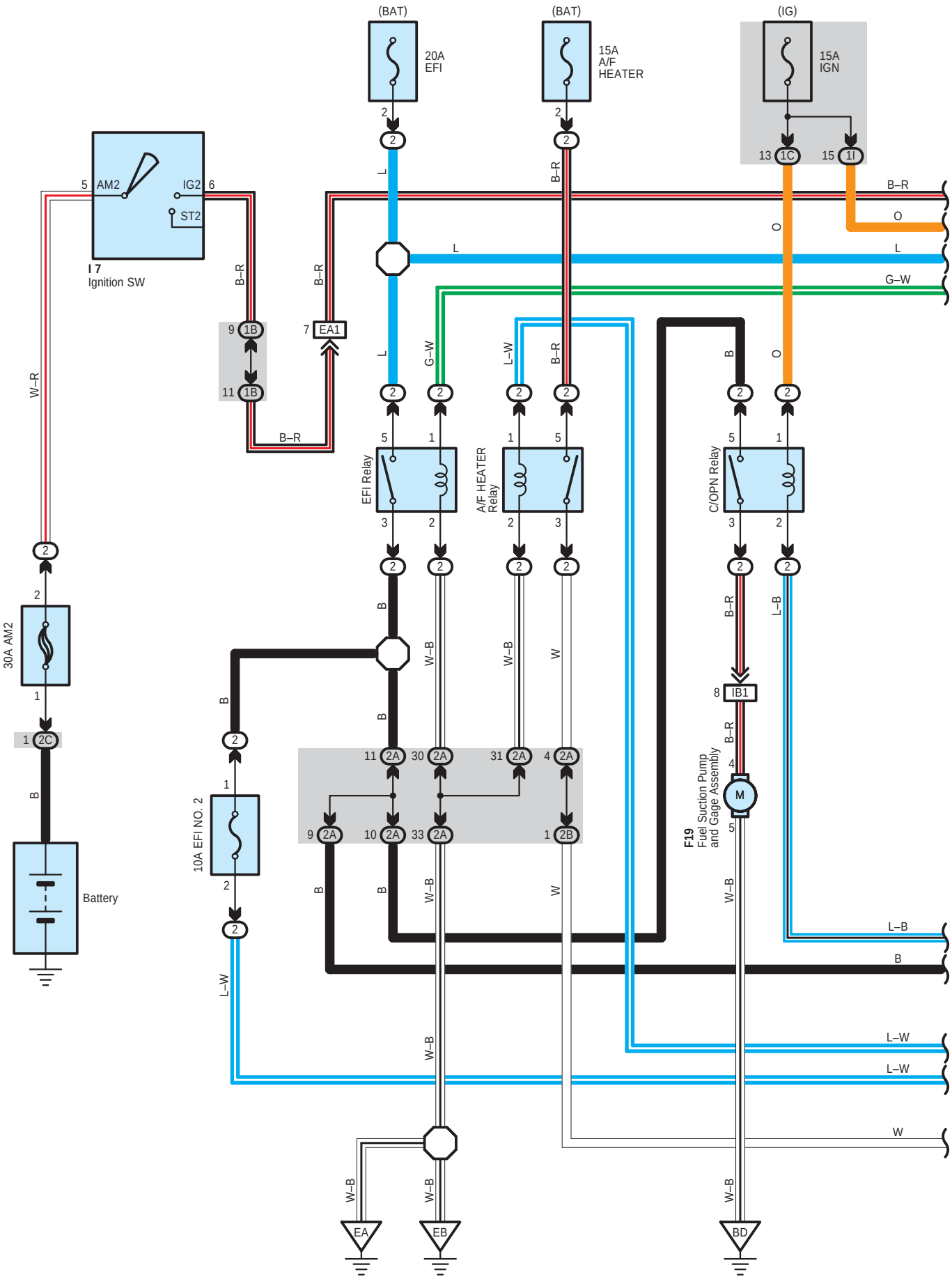
(BAT)
20A
EFI
(BAT)
15A
A/F
HEATER
(IG)
15A
IGN
I 7
Ignition SW
AM2
IG2
ST2
EFI Relay
A/F HEATER
Relay
C/OPN Relay
30A AM2
10A EFI NO. 2
Battery
F19
Fuel Suction Pump
and Gage Assembly
EA
EB
BD
W–R
B–R
L
G–W
L–W
B
O
W
W–B
L–B

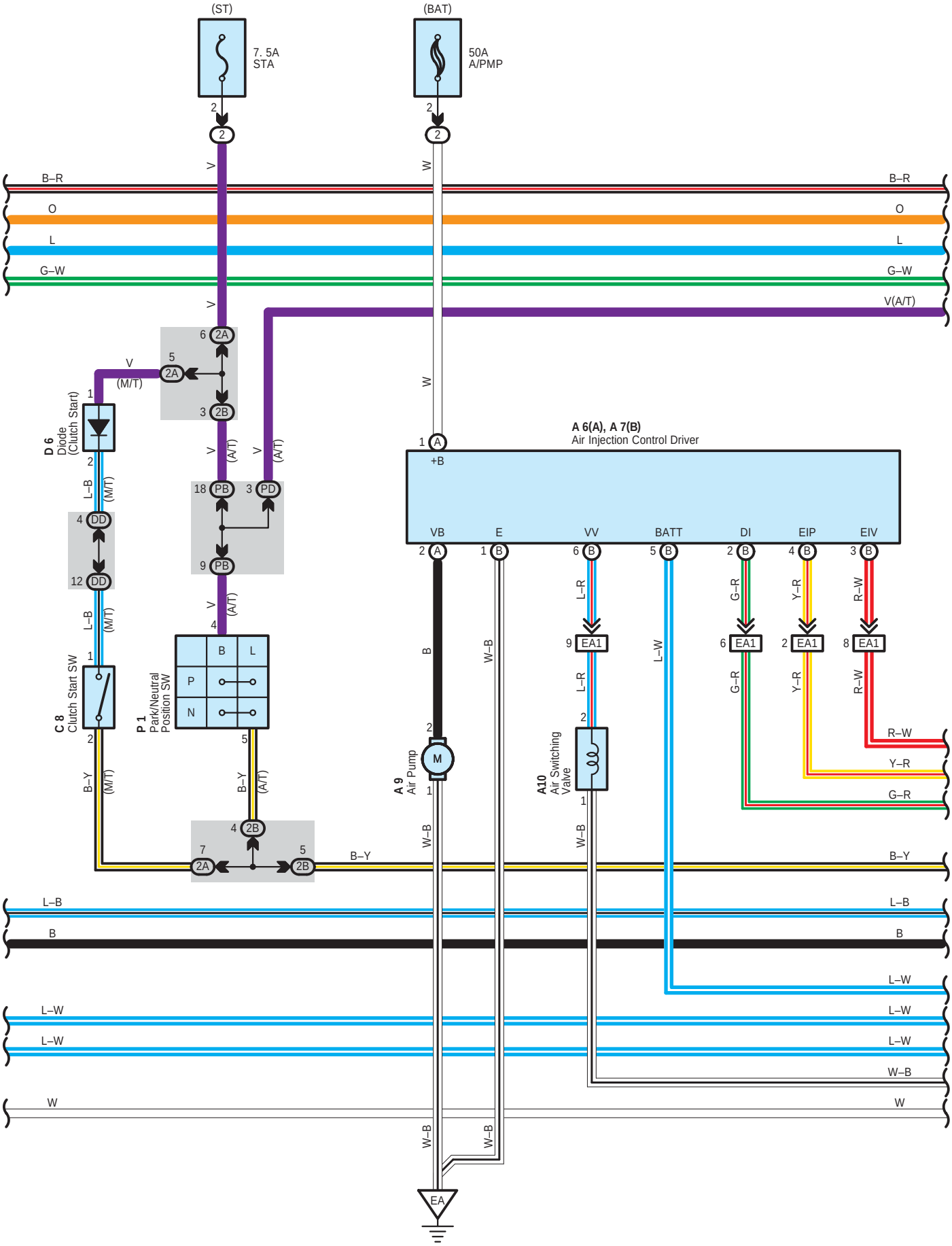
(ST)
7. 5A
STA
(BAT)
50A
A/PMP
B–R
O
L
G–W
V(A/T)
V
(M/T)
W
D 6
Diode
(Clutch Start)
L–B
(M/T)
C 8
Clutch Start SW
B–Y
(M/T)
P 1
Park/Neutral
Position SW
B
L
P
N
B–Y
(A/T)
A 6(A), A 7(B)
Air Injection Control Driver
+B
VB
E
VV
BATT
DI
EIP
EIV
B
W–B
L–R
L–W
G–R
Y–R
R–W
EA1
A 9
Air Pump
A10
Air Switching
Valve
W–B
W
EA

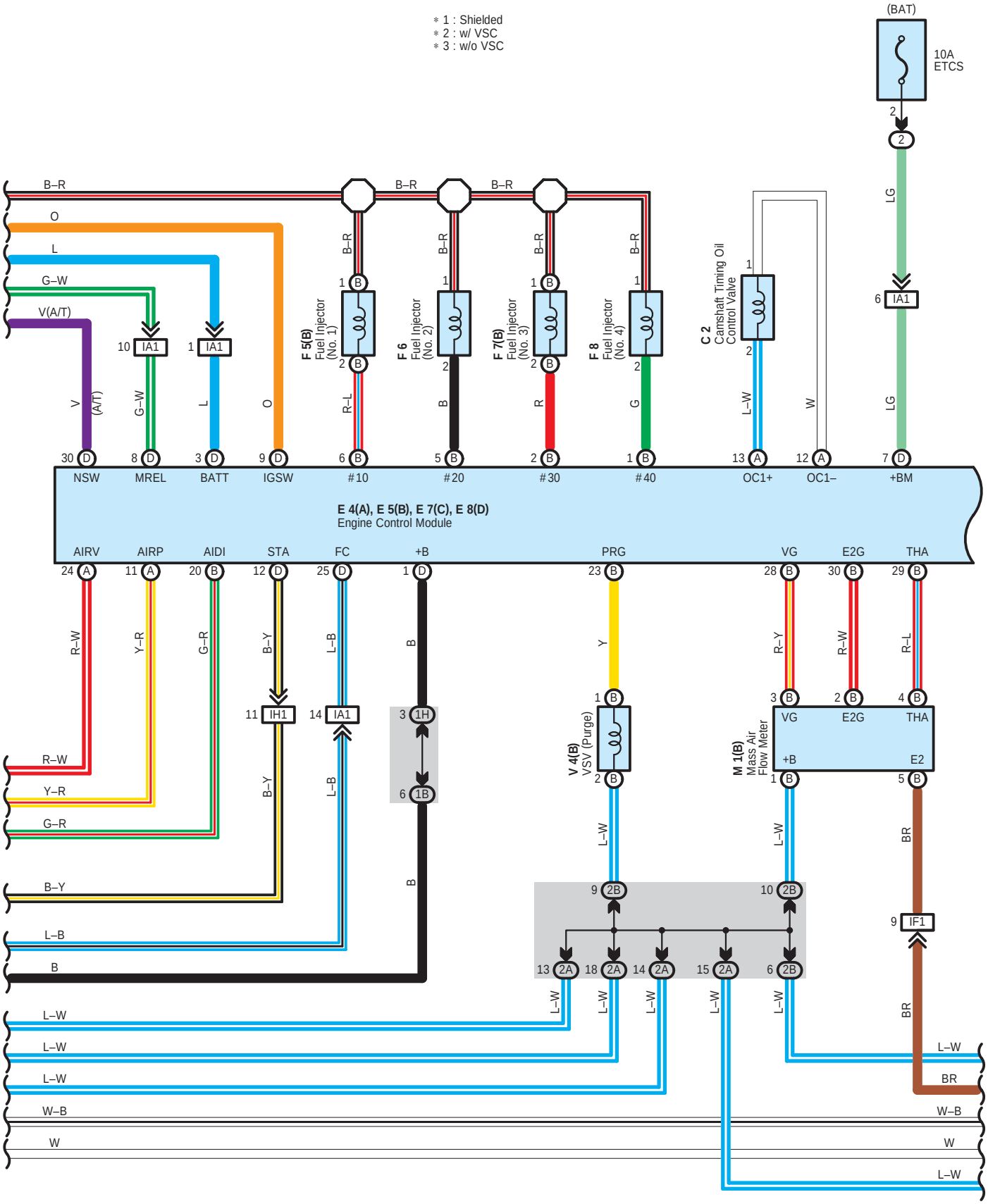
* 1 : Shielded
* 2 : w/ VSC
* 3 : w/o VSC
(BAT)
10A ETCS
B–R
O
L
G–W
V(A/T)
LG
IA1
F 5(B) Fuel Injector (No. 1)
F 6 Fuel Injector (No. 2)
F 7(B) Fuel Injector (No. 3)
F 8 Fuel Injector (No. 4)
C 2 Camshaft Timing Oil Control Valve
L–W
W
R–L
B
R
G
NSW
MREL
BATT
IGSW
#10
#20
#30
#40
OC1+
OC1–
+BM
E 4(A), E 5(B), E 7(C), E 8(D)
Engine Control Module
AIRV
AIRP
AIDI
STA
FC
+B
PRG
VG
E2G
THA
R–W
Y–R
G–R
B–Y
L–B
B
Y
R–Y
R–W
R–L
IH1
1H
1B
V 4(B) VSV (Purge)
M 1(B) Mass Air Flow Meter
+B
E2
2B
2A
BR
IF1
W–B

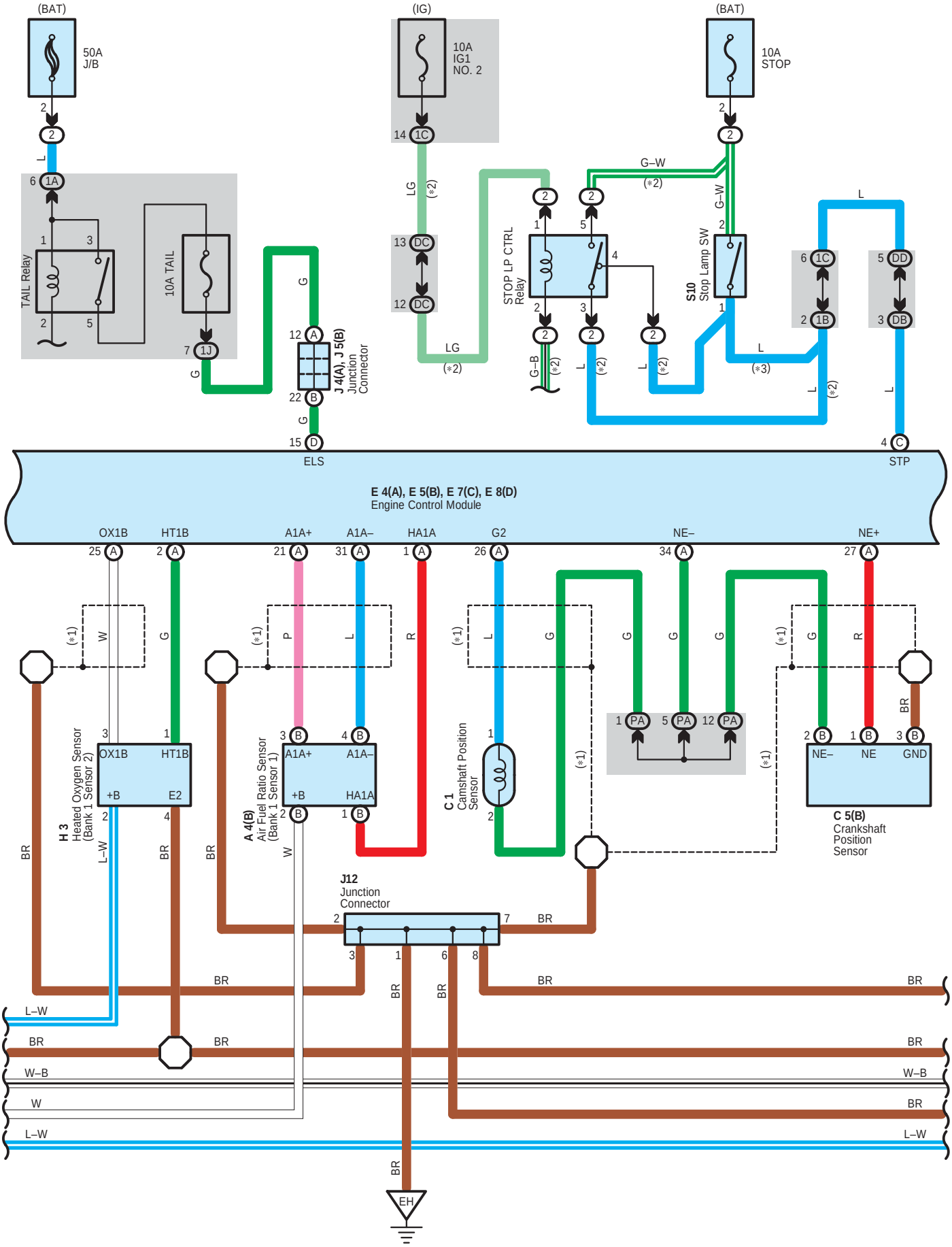
(BAT)
50A
J/B
(IG)
10A
IG1
NO. 2
(BAT)
10A
STOP
TAIL Relay
10A TAIL
STOP LP CTRL
Relay
S10
Stop Lamp SW
J 4(A), J 5(B)
Junction
Connector
ELS
STP
E 4(A), E 5(B), E 7(C), E 8(D)
Engine Control Module
OX1B
HT1B
A1A+
A1A–
HA1A
G2
NE–
NE+
H 3
Heated Oxygen Sensor
(Bank 1 Sensor 2)
A 4(B)
Air Fuel Ratio Sensor
(Bank 1 Sensor 1)
C 1
Camshaft Position
Sensor
C 5(B)
Crankshaft
Position
Sensor
J12
Junction
Connector
EH

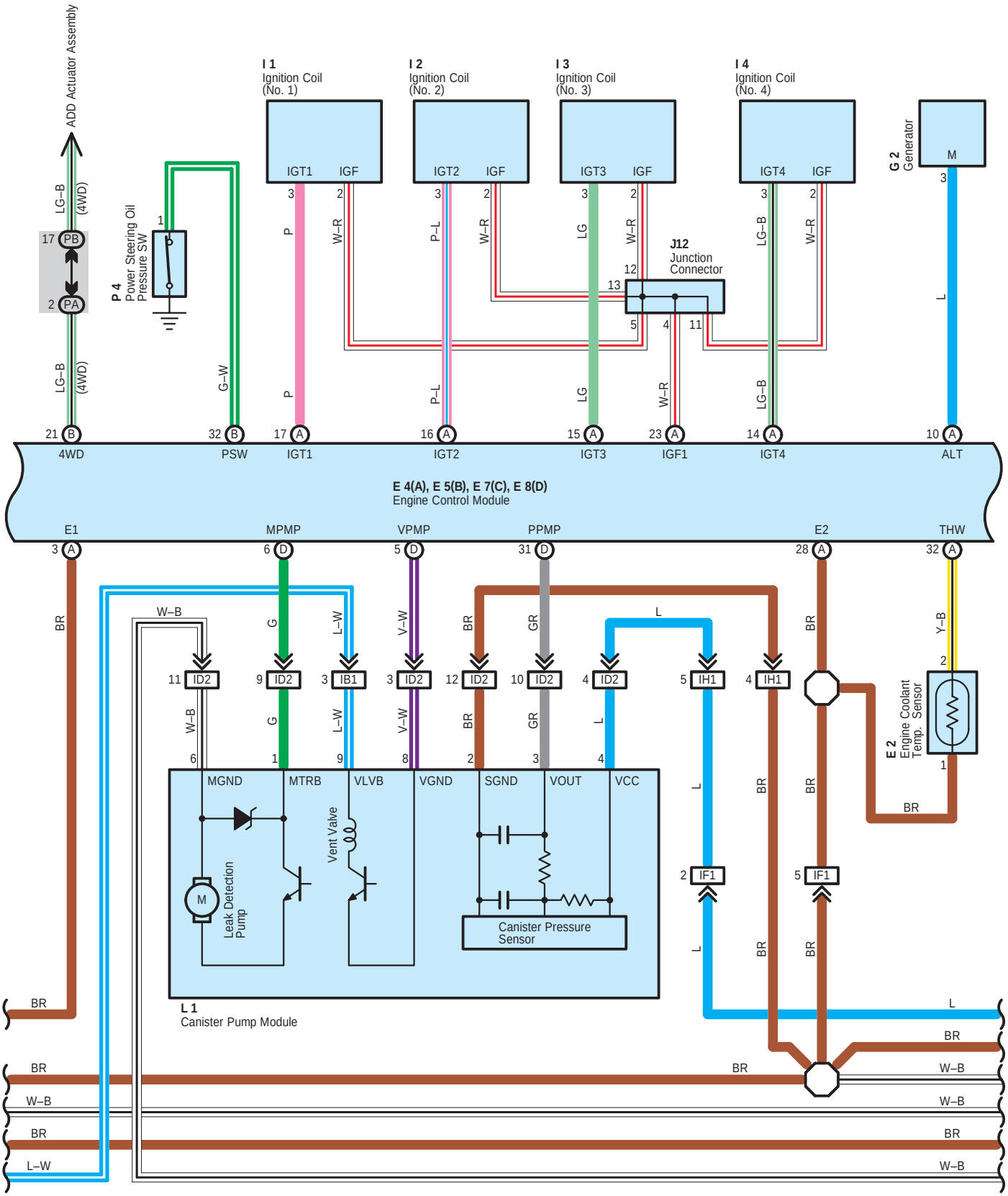
ADD Actuator Assembly
LG–B (4WD)
17 PB
2 PA
LG–B (4WD)
21 B
4WD
P 4
Power Steering Oil Pressure SW
1
G–W
32 B
PSW
I 1
Ignition Coil (No. 1)
IGT1
IGF
3
2
P
W–R
17 A
IGT1
I 2
Ignition Coil (No. 2)
IGT2
IGF
P–L
W–R
16 A
IGT2
I 3
Ignition Coil (No. 3)
IGT3
IGF
LG
W–R
15 A
IGT3
J12
Junction Connector
12
13
5
4
11
W–R
23 A
IGF1
I 4
Ignition Coil (No. 4)
IGT4
IGF
LG–B
W–R
14 A
IGT4
G 2
Generator
M
3
L
10 A
ALT
E 4(A), E 5(B), E 7(C), E 8(D)
Engine Control Module
E1
MPMP
VPMP
PPMP
E2
THW
3 A
6 D
5 D
31 D
28 A
32 A
BR
W–B
G
L–W
V–W
BR
GR
L
BR
Y–B
11 ID2
9 ID2
3 IB1
3 ID2
12 ID2
10 ID2
4 ID2
5 IH1
4 IH1
2
E 2
Engine Coolant Temp. Sensor
1
BR
MGND
MTRB
VLVB
VGND
SGND
VOUT
VCC
Vent Valve
M
Leak Detection Pump
Canister Pressure Sensor
L 1
Canister Pump Module
2 IF1
5 IF1
L
BR
W–B
L–W

∗ 1 : Shielded

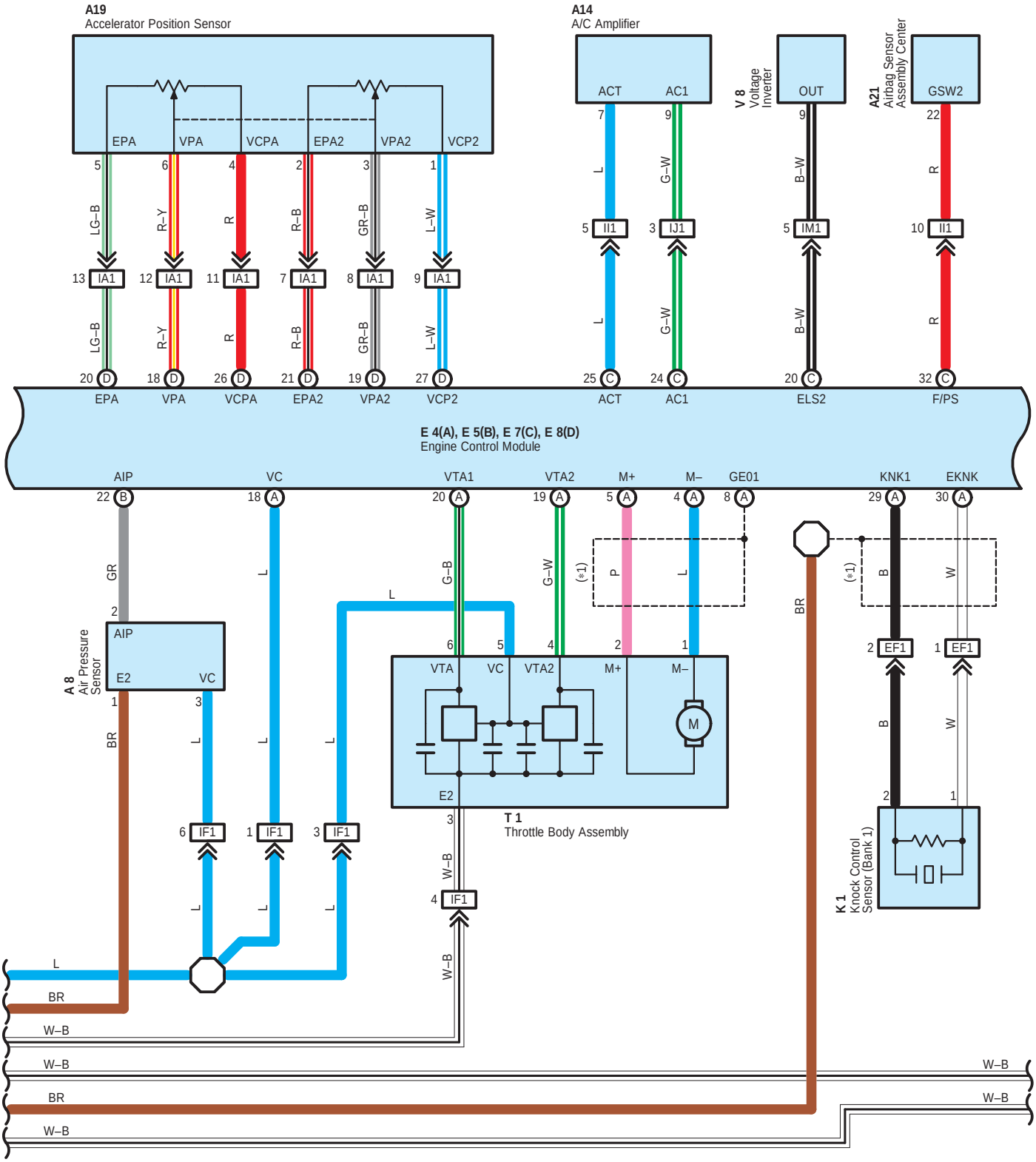
A19
Accelerator Position Sensor
EPA
VPA
VCPA
EPA2
VPA2
VCP2
A14
A/C Amplifier
ACT
AC1
V 8
Voltage Inverter
OUT
A21
Airbag Sensor Assembly Center
GSW2
E 4(A), E 5(B), E 7(C), E 8(D)
Engine Control Module
ELS2
F/PS
AIP
VC
VTA1
VTA2
M+
M–
GE01
KNK1
EKNK
A 8
Air Pressure Sensor
E2
T 1
Throttle Body Assembly
VTA
K 1
Knock Control Sensor (Bank 1)
EF1
IF1
IA1
II1
IJ1
IM1

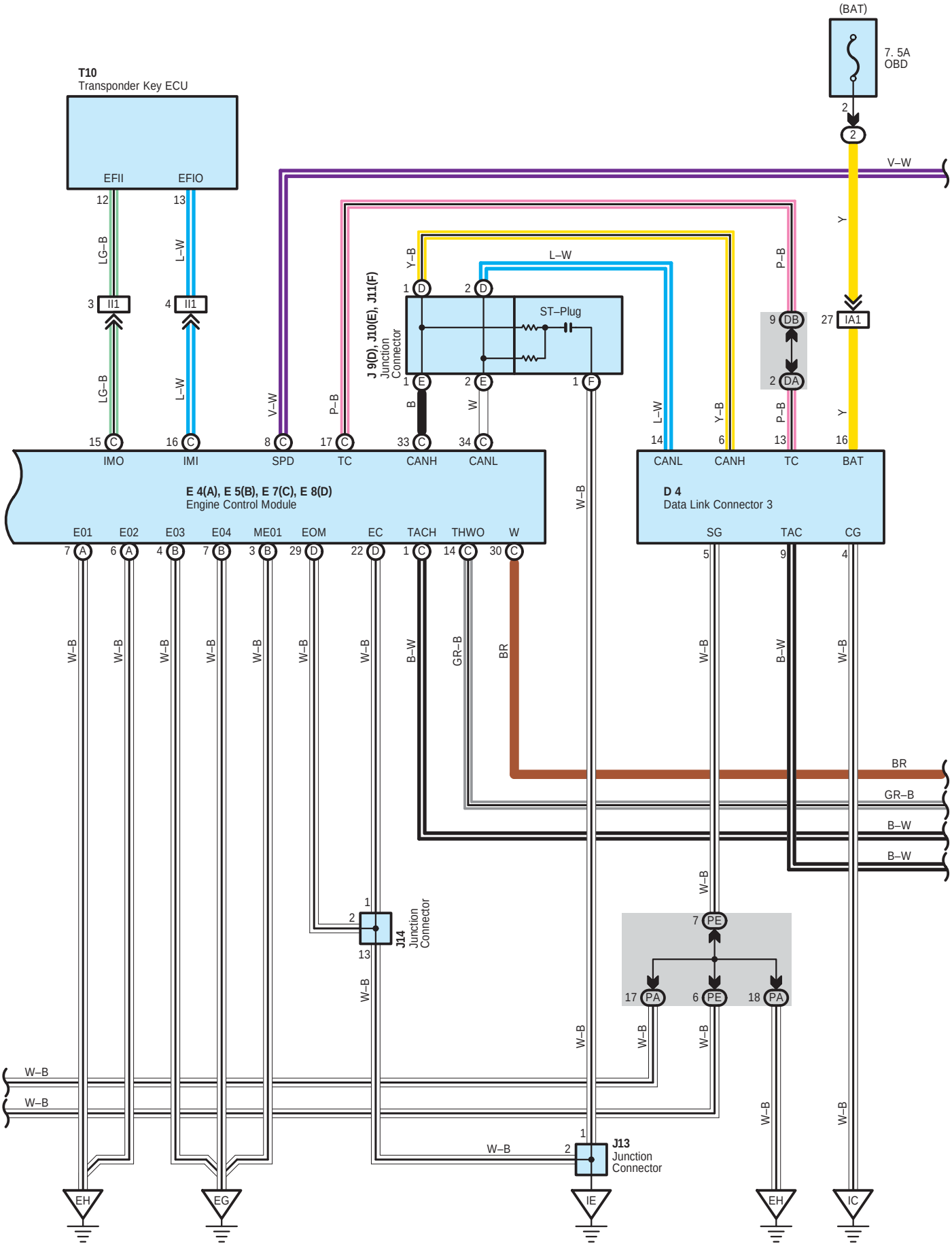
(BAT)
7. 5A
OBD
T10
Transponder Key ECU
EFII
EFIO
V–W
LG–B
L–W
Y
Y–B
L–W
P–B
J 9(D), J10(E), J11(F)
Junction
Connector
ST–Plug
V–W
P–B
B
W
L–W
Y–B
P–B
Y
IMO
IMI
SPD
TC
CANH
CANL
CANL
CANH
TC
BAT
E 4(A), E 5(B), E 7(C), E 8(D)
Engine Control Module
D 4
Data Link Connector 3
E01
E02
E03
E04
ME01
EOM
EC
TACH
THWO
W
SG
TAC
CG
W–B
B–W
GR–B
BR
J14
Junction
Connector
J13
Junction
Connector
EH
EG
IE
EH
IC

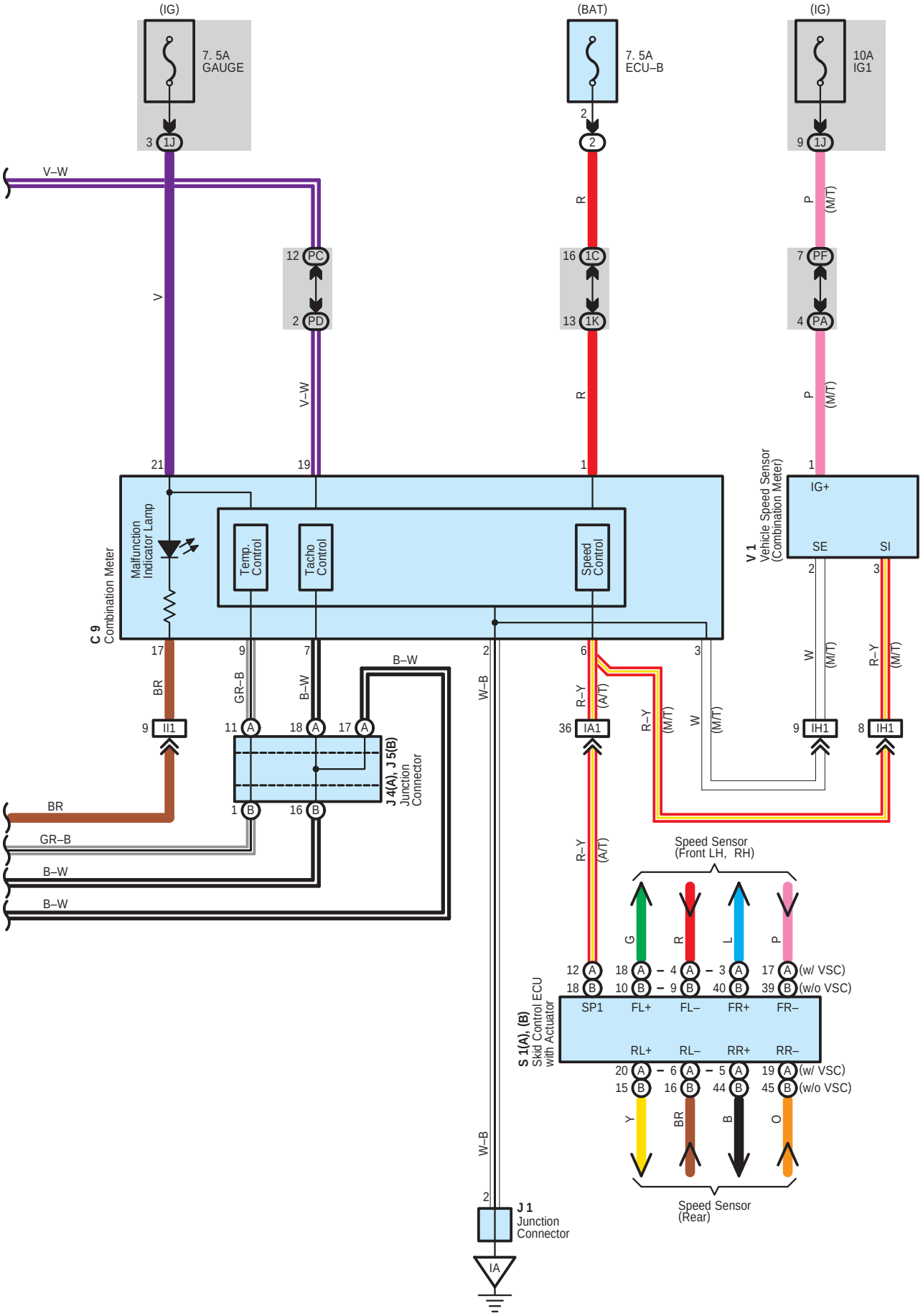
(IG)
7. 5A
GAUGE
3 1J
(BAT)
7. 5A
ECU–B
2
2
(IG)
10A
IG1
9 1J
V–W
V
R
P (M/T)
12 PC
2 PD
16 1C
13 1K
7 PF
4 PA
V–W
R
P (M/T)
21
19
1
1
C 9
Combination Meter
Malfunction
Indicator Lamp
Temp.
Control
Tacho
Control
Speed
Control
V 1
Vehicle Speed Sensor
(Combination Meter)
IG+
SE
SI
2
3
17
9
7
2
6
3
BR
GR–B
B–W
B–W
W–B
R–Y (A/T)
W (M/T)
R–Y (M/T)
9 II1
11 A
18 A
17 A
36 IA1
9 IH1
8 IH1
J 4(A), J 5(B)
Junction
Connector
1 B
16 B
BR
GR–B
B–W
B–W
R–Y (A/T)
Speed Sensor
(Front LH, RH)
G
R
L
P
12 A
18 B
18 A
10 B
4 A
9 B
3 A
40 B
17 A
39 B
(w/ VSC)
(w/o VSC)
S 1(A), (B)
Skid Control ECU
with Actuator
SP1
FL+
FL–
FR+
FR–
RL+
RL–
RR+
RR–
20 A
15 B
6 A
16 B
5 A
44 B
19 A
45 B
(w/ VSC)
(w/o VSC)
Y
BR
B
O
Speed Sensor
(Rear)
W–B
2
J 1
Junction
Connector
IA

System Outline

The engine control system utilizes a microcomputer and maintains overall control of the engine, etc. An outline of engine control is given here.

1. Input Signals

(1) Engine coolant temp. signal system

The engine coolant temp. sensor detects the engine coolant temp. and has a built–in thermistor with a resistance which varies according to the engine coolant temp. Thus the engine coolant temp. is input as a control signal to TERMINAL THW of the engine control module.

(2) Intake air temp. signal system

The intake air temp. sensor is installed in the mass air flow meter and detects the intake air temp., which is input as a control signal to TERMINAL THA of the engine control module.

(3) Power steering oil pressure signal system

Power steering oil pressure is detected by the power steering oil pressure SW and is input as a control signal to TERMINAL PSW of the engine control module.

(4) RPM signal system

Camshaft position and crankshaft position are detected by the camshaft position sensor and crankshaft position sensor. Camshaft position is input as a control signal to TERMINAL G2 of the engine control module, and engine RPM is input into TERMINAL NE+.

(5) Throttle signal system

The throttle position sensor detects the throttle valve opening angle, which is input as a control signal to TERMINALS VTA1 and VTA2 of the engine control module.

(6) Vehicle speed signal system

The vehicle speed is detected by the ABS speed sensor and the signal is input to TERMINAL SPD of the engine control module via the combination meter and the skid control ECU with actuator. (A/T)

The vehicle speed is detected by the vehicle speed sensor installed in the transaxle and the signal is input to TERMINAL SPD of the engine control module via the combination meter. (M/T)

(7) NSW signal system (A/T)

The Park/Neutral position SW detects whether the shift position is in neutral or not, and inputs a control signal to TERMINAL NSW of the engine control module.

(8) A/C SW signal system

The operating voltage of the A/C SW is detected and is input as a control signal to TERMINAL AC1 of the engine control module.

(9) Battery signal system

Voltage is constantly applied to TERMINAL BATT of the engine control module. When the ignition SW is turned to on, voltage for engine control module operation is applied via the EFI relay to TERMINAL +B of the engine control module.

(10) Intake air volume signal system

Intake air volume is detected by the mass air flow meter, and is input as a control signal to TERMINAL VG of the engine control module.

(11) STA signal system

To confirm that the engine is cranking, the voltage applied to the starter motor during cranking is detected and is input as a control signal to TERMINAL STA of the engine control module.

(12) Oxygen sensor signal system

The oxygen density in the exhaust gases is detected and is input as a control signal into TERMINAL OX1B of the engine control module. To maintain stable detection performance by the oxygen sensor, a heater is used for warming the sensor. The heater is also controlled by the engine control module (HT1B).

(13) Engine knock signal system

Engine knocking is detected by the knock sensor and input as a control signal to TERMINAL KNK1 of the engine control module.

(14) Electrical load signal system

When systems which cause a high electrical load such as the rear window defogger, taillight are turned on, a signal is input to TERMINALS ELS and ELS2 as a control signal.

(15) Air fuel ratio signal circuit

The air fuel ratio is detected and input as a control signal into TERMINAL A1A+ of the engine control module.

2. Control System

* SFI system
  The SFI system monitors the engine conditions through the signals, which are input from each sensor to the engine control module. Based on this data and the program memorized in the engine control module, the most appropriate fuel injection timing is decided and current is output to TERMINALS #10, #20, #30 and #40 of the engine control module, operating the injectors (to inject fuel). This is the system which finely controls the fuel injection in response to the driving conditions, through the engine control module.
* ESA system
  The ESA system monitors the engine conditions using the signals, which are input to the engine control module from each sensor. Based on this data and the program memorized in the engine control module, the most appropriate ignition timing is decided and current is output to TERMINALS IGT1, IGT2, IGT3 and IGT4 of the engine control module. This output controls the ignition coil and igniter No. 1 , No. 2 , No. 3 and No. 4 to produce the most appropriate ignition timing for the driving conditions.
* Knock control system
  Knock control system controls the gate based on the engine rotation speed and detects knocking by the peak value of the knock sensor output during the gate open period, and then controls it to the most suitable ignition timing in proportion to the driving condition.
* Evapoparge control system
  This system leads the vapor stuck to the canister to the serge tank in order not to agitate the air fuel by adjusting the fuel injection volume.
  The signal at this time will be output from TERMINAL PRG of the engine control module to VSV (Purge).

3. Diagnosis System

With the diagnosis system, when there is a malfunctioning in the engine control module signal system, the malfunction system is recorded in the memory. The malfunctioning system can be found by reading the display (Code) of the malfunction indicator lamp.

4. Fail–Safe System

When a malfunction occurs in any system, if there is a possibility of engine trouble being caused by continued control based on the signals from that system, the fail–safe system either controls the system by using the data (Standard values) recorded in the engine control module memory or else stops the engine.

○ : Parts Location

Code	See Page	Code	See Page	Code	See Page
A4 B	42 (2TR–FE)	E7 C	44	J10 E	45
A6 A	42 (2TR–FE)	E8 D	44	J11 F	45
A7 B	42 (2TR–FE)	F5 B	42 (2TR–FE)	J12	45
A8	42 (2TR–FE)	F6	42 (2TR–FE)	J13	45
A9	42 (2TR–FE)	F7 B	42 (2TR–FE)	J14	45
A10	42 (2TR–FE)	F8	42 (2TR–FE)	K1	43 (2TR–FE)
A14	44	F19	48 (*2)	L1	48 (*2)
A19	44		49 (*3)		49 (*3)
A21	44	G2	42 (2TR–FE)	M1 B	43 (2TR–FE)
C1	42 (2TR–FE)	H3	43 (2TR–FE)	P1	43 (2TR–FE)
C2	42 (2TR–FE)	I1	43 (2TR–FE)	P4	43 (2TR–FE)
C5 B	42 (2TR–FE)	I2	43 (2TR–FE)	S1 A	43 (2TR–FE)
C8	44	I3	43 (2TR–FE)	S1 B	43 (2TR–FE)
C9	44	I4	43 (2TR–FE)	S10	45
D4	44	I7	45	T1	43 (2TR–FE)
D6	44	J1	45	T10	45
E2	42 (2TR–FE)	J4 A	45	V1	43 (2TR–FE)
E4 A	44	J5 B	45	V4 B	43 (2TR–FE)
E5 B	44	J9 D	45	V8	48 (*2)

⬭ : Relay Blocks

Code	See Page	Relay Blocks (Relay Block Location)
2	24	Engine Room R/B (Engine Compartment Left)

* 1 : Double Cab * 2 : Access Cab * 3 : Regular Cab * 4 : Separate Seat * 5 : Bench Seat

: Junction Block and Wire Harness Connector

Code	See Page	Junction Block and Wire Harness (Connector Location)
1A	28	Engine Room Main Wire and Driver Side J/B (Lower Finish Panel)
1B		
1C		
1H	29	Instrument Panel Wire and Driver Side J/B (Lower Finish Panel)
1I		
1J		
1K		
2A	24	Engine Room J/B (Engine Compartment Left)
2B	24	Engine Wire and Engine Room J/B (Engine Compartment Left)
2C	24	Engine Room Main Wire and Engine Room J/B (Engine Compartment Left)
DA	34	Instrument Panel Wire and Instrument Panel J/B No.1 (Left Kick Panel)
DB		
DC	34	Engine Room Main Wire and Instrument Panel J/B No.1 (Left Kick Panel)
DD		
PA	36	Engine Wire and Instrument Panel J/B No.2 (Right Side of Glove Box)
PB		
PC	36	Instrument Panel Wire and Instrument Panel J/B No.2 (Right Side of Glove Box)
PD		
PE		
PF		

: Connector Joining Wire Harness and Wire Harness

Code	See Page	Joining Wire Harness and Wire Harness (Connector Location)
EA1	53 (2TR–FE)	Engine Wire and Engine Room Main Wire (Inside of Engine Room R/B)
EF1	53 (2TR–FE)	Engine Wire and Sensor Wire (Left Side of Cylinder Block)
IA1	54	Instrument Panel Wire and Engine Room Main Wire (Left Kick Panel)
IB1	54	Frame Wire and Engine Room Main Wire (Left Kick Panel)
ID2	54	Frame Wire and Instrument Panel Wire (Left Kick Panel)
IF1	55	Engine Wire and Engine Wire (Behind the Glove Box)
IH1	55	Engine Wire and Instrument Panel Wire (Right Side of Glove Box)
II1	55	Instrument Panel Wire and Instrument Panel Wire (Instrument Panel Brace RH)
IJ1	55	Instrument Panel Wire and Instrument Panel Wire (Right Kick Panel)
IM1	55	Floor No.3 Wire and Instrument Panel Wire (Under the Console Box)

: Ground Points

Code	See Page	Ground Points Location
EA	53 (2TR–FE)	Front Right Fender
EB	53 (2TR–FE)	Front Left Fender
EG	53 (2TR–FE)	Rear Side of Cylinder Block
EH		
IA	54	Left Kick Panel
IC	54	Instrument Panel Brace RH
IE	54	Right Kick Panel
BD	57 (*2)	Near the Rear Differential
	58 (*3)	

* 1 : Double Cab * 2 : Access Cab * 3 : Regular Cab * 4 : Separate Seat * 5 : Bench Seat

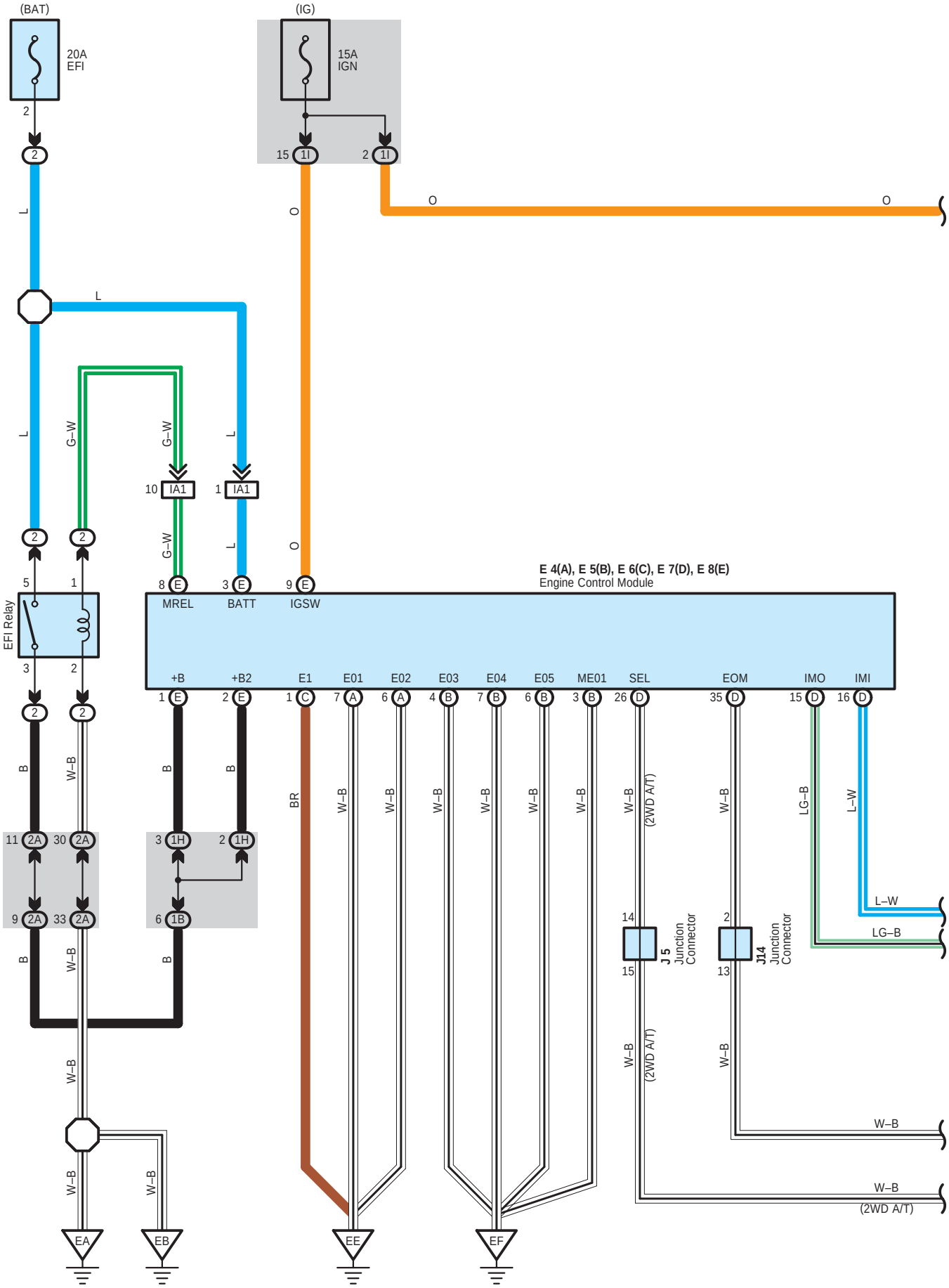
(BAT)
20A
EFI
(IG)
15A
IGN
E 4(A), E 5(B), E 6(C), E 7(D), E 8(E)
Engine Control Module
EFI Relay
MREL
BATT
IGSW
+B
+B2
E1
E01
E02
E03
E04
E05
ME01
SEL
EOM
IMO
IMI
J 5
Junction
Connector
J14
Junction
Connector
(2WD A/T)
EA
EB
EE
EF

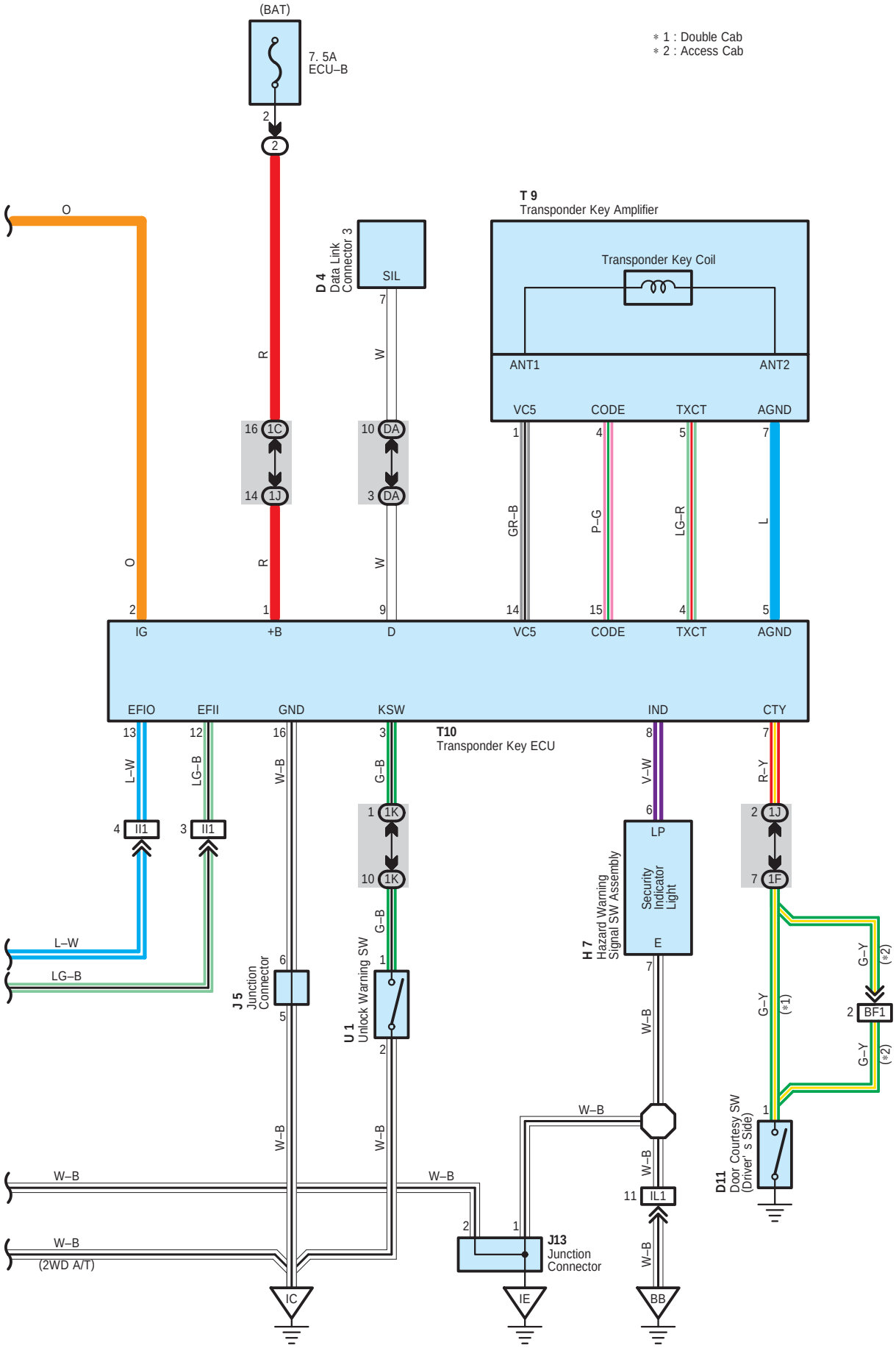
(BAT)
7. 5A
ECU–B
2
2
* 1 : Double Cab
* 2 : Access Cab
T 9
Transponder Key Amplifier
Transponder Key Coil
ANT1
ANT2
VC5
CODE
TXCT
AGND
D 4
Data Link
Connector 3
SIL
7
W
10 DA
3 DA
16 1C
14 1J
R
O
2
1
IG
+B
D
14
15
4
5
GR–B
P–G
LG–R
L
VC5
CODE
TXCT
AGND
EFIO
EFII
GND
KSW
IND
CTY
T10
Transponder Key ECU
13
12
16
3
8
7
L–W
LG–B
W–B
G–B
V–W
R–Y
4 II1
3 II1
1 1K
10 1K
6
LP
2 1J
7 1F
H 7
Hazard Warning
Signal SW Assembly
Security
Indicator
Light
E
7
W–B
L–W
LG–B
J 5
Junction
Connector
6
5
U 1
Unlock Warning SW
1
2
G–Y
(*1)
G–Y
(*2)
2 BF1
G–Y
(*2)
W–B
W–B
W–B
W–B
W–B
W–B
W–B
(2WD A/T)
11 IL1
1
D11
Door Courtesy SW
(Driver' s Side)
2
1
J13
Junction
Connector
IC
IE
BB

Engine Immobiliser System for 1GR–FE

: Parts Location

Code		See Page	Code		See Page	Code	See Page
D4		44	E6	C	44	J13	45
D11		46 (*1)	E7	D	44	J14	45
		48 (*2)	E8	E	44	T9	45
E4	A	44	H7		45	T10	45
E5	B	44	J5		45	U1	45

: Relay Blocks

Code	See Page	Relay Blocks (Relay Block Location)
2	24	Engine Room R/B (Engine Compartment Left)

: Junction Block and Wire Harness Connector

Code	See Page	Junction Block and Wire Harness (Connector Location)
1B	28	Engine Room Main Wire and Driver Side J/B (Lower Finish Panel)
1C		
1F	28	Floor No.2 Wire and Driver Side J/B (Lower Finish Panel)
1H	29	Instrument Panel Wire and Driver Side J/B (Lower Finish Panel)
1I		
1J		
1K		
2A	24	Engine Room J/B (Engine Compartment Left)
DA	34	Instrument Panel Wire and Instrument Panel J/B No.1 (Left Kick Panel)

: Connector Joining Wire Harness and Wire Harness

Code	See Page	Joining Wire Harness and Wire Harness (Connector Location)
IA1	54	Instrument Panel Wire and Engine Room Main Wire (Left Kick Panel)
II1	55	Instrument Panel Wire and Instrument Panel Wire (Instrument Panel Brace RH)
IL1	55	Instrument Panel Wire and Floor Wire (Right Kick Panel)
BF1	57 (*2)	Rear Door No.2 Wire and Floor No.2 Wire (Under the Left Quarter Panel)

: Ground Points

Code	See Page	Ground Points Location
EA	52 (1GR–FE)	Front Right Fender
EB	52 (1GR–FE)	Front Left Fender
EE	52 (1GR–FE)	Rear Side of Right Bank Cylinder Block
EF	52 (1GR–FE)	Rear Side of Left Bank Cylinder Block
IC	54	Instrument Panel Brace RH
IE	54	Right Kick Panel
BB	56 (*1)	Floor Seat Cross Member RH
	57 (*2)	

* 1 : Double Cab * 2 : Access Cab * 3 : Regular Cab * 4 : Separate Seat * 5 : Bench Seat

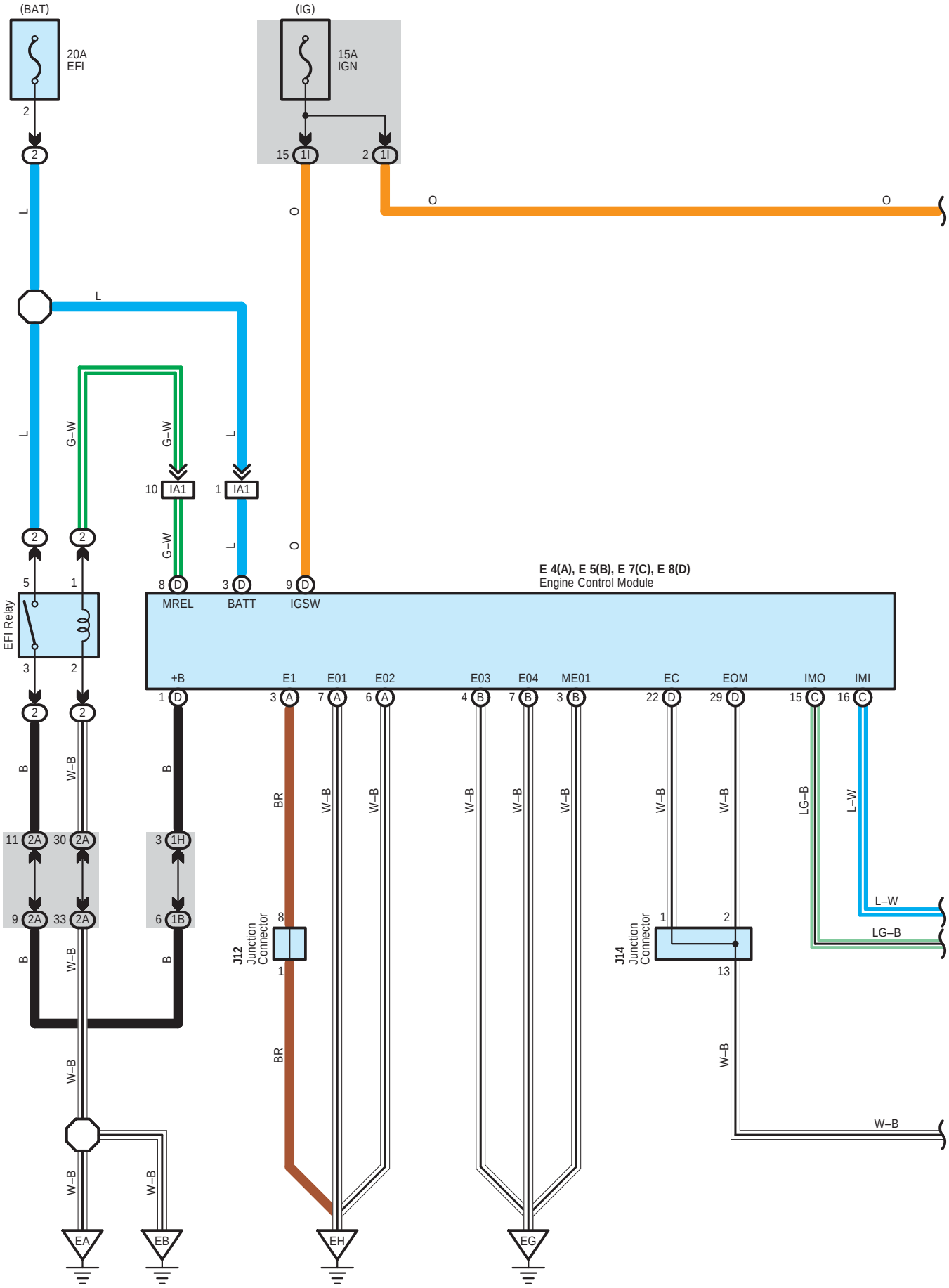
(BAT)
20A
EFI
(IG)
15A
IGN
E 4(A), E 5(B), E 7(C), E 8(D)
Engine Control Module
EFI Relay
MREL
BATT
IGSW
+B
E1
E01
E02
E03
E04
ME01
EC
EOM
IMO
IMI
J12
Junction
Connector
J14
Junction
Connector
EA
EB
EH
EG
L
O
G–W
W–B
B
BR
LG–B
L–W

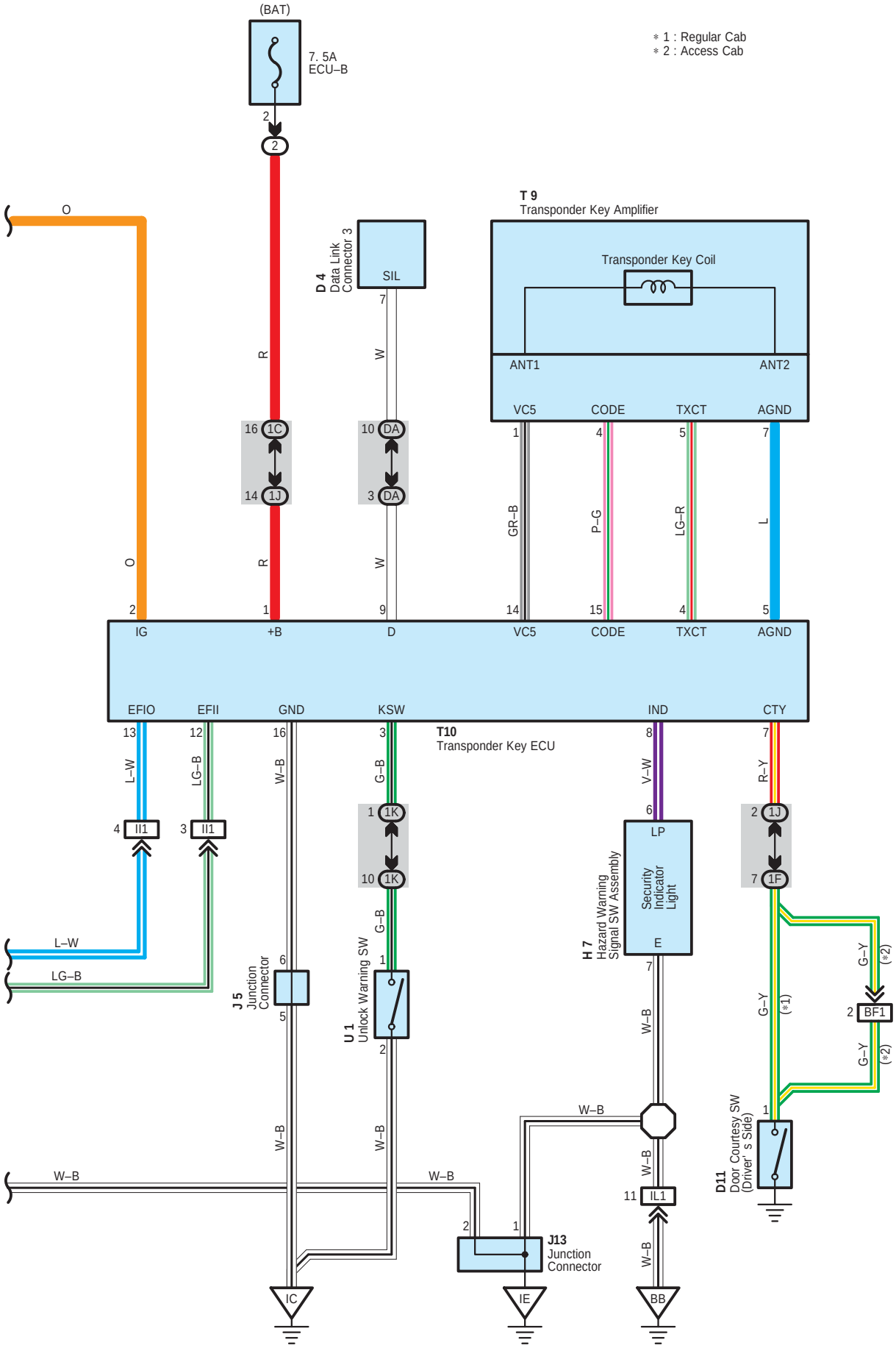
(BAT)
7. 5A
ECU–B
* 1 : Regular Cab
* 2 : Access Cab
T 9
Transponder Key Amplifier
Transponder Key Coil
ANT1
ANT2
VC5
CODE
TXCT
AGND
D 4
Data Link Connector 3
SIL
IG
+B
D
EFIO
EFII
GND
KSW
IND
CTY
T10
Transponder Key ECU
H 7
Hazard Warning Signal SW Assembly
Security Indicator Light
LP
J 5
Junction Connector
U 1
Unlock Warning SW
J13
Junction Connector
D11
Door Courtesy SW (Driver' s Side)
BF1
IC
IE
BB
O
R
W
GR–B
P–G
LG–R
L
L–W
LG–B
W–B
G–B
V–W
R–Y
G–Y

Engine Immobiliser System for 2TR–FE

: Parts Location

Code	See Page	Code	See Page	Code	See Page
D4	44	E7 C	44	J13	45
D11	48 (*2)	E8 D	44	J14	45
	49 (*3)	H7	45	T9	45
E4 A	44	J5	45	T10	45
E5 B	44	J12	45	U1	45

: Relay Blocks

Code	See Page	Relay Blocks (Relay Block Location)
2	24	Engine Room R/B (Engine Compartment Left)

: Junction Block and Wire Harness Connector

Code	See Page	Junction Block and Wire Harness (Connector Location)
1B	28	Engine Room Main Wire and Driver Side J/B (Lower Finish Panel)
1C		
1F	28	Floor No.2 Wire and Driver Side J/B (Lower Finish Panel)
1H	29	Instrument Panel Wire and Driver Side J/B (Lower Finish Panel)
1I		
1J		
1K		
2A	24	Engine Room J/B (Engine Compartment Left)
DA	34	Instrument Panel Wire and Instrument Panel J/B No.1 (Left Kick Panel)

: Connector Joining Wire Harness and Wire Harness

Code	See Page	Joining Wire Harness and Wire Harness (Connector Location)
IA1	54	Instrument Panel Wire and Engine Room Main Wire (Left Kick Panel)
II1	55	Instrument Panel Wire and Instrument Panel Wire (Instrument Panel Brace RH)
IL1	55	Instrument Panel Wire and Floor Wire (Right Kick Panel)
BF1	57 (*2)	Rear Door No.2 Wire and Floor No.2 Wire (Under the Left Quarter Panel)

: Ground Points

Code	See Page	Ground Points Location
EA	53 (2TR–FE)	Front Right Fender
EB	53 (2TR–FE)	Front Left Fender
EG	53 (2TR–FE)	Rear Side of Cylinder Block
EH		
IC	54	Instrument Panel Brace RH
IE	54	Right Kick Panel
BB	57 (*2)	Floor Seat Cross Member RH
	58 (*3)	

* 1 : Double Cab * 2 : Access Cab * 3 : Regular Cab * 4 : Separate Seat * 5 : Bench Seat

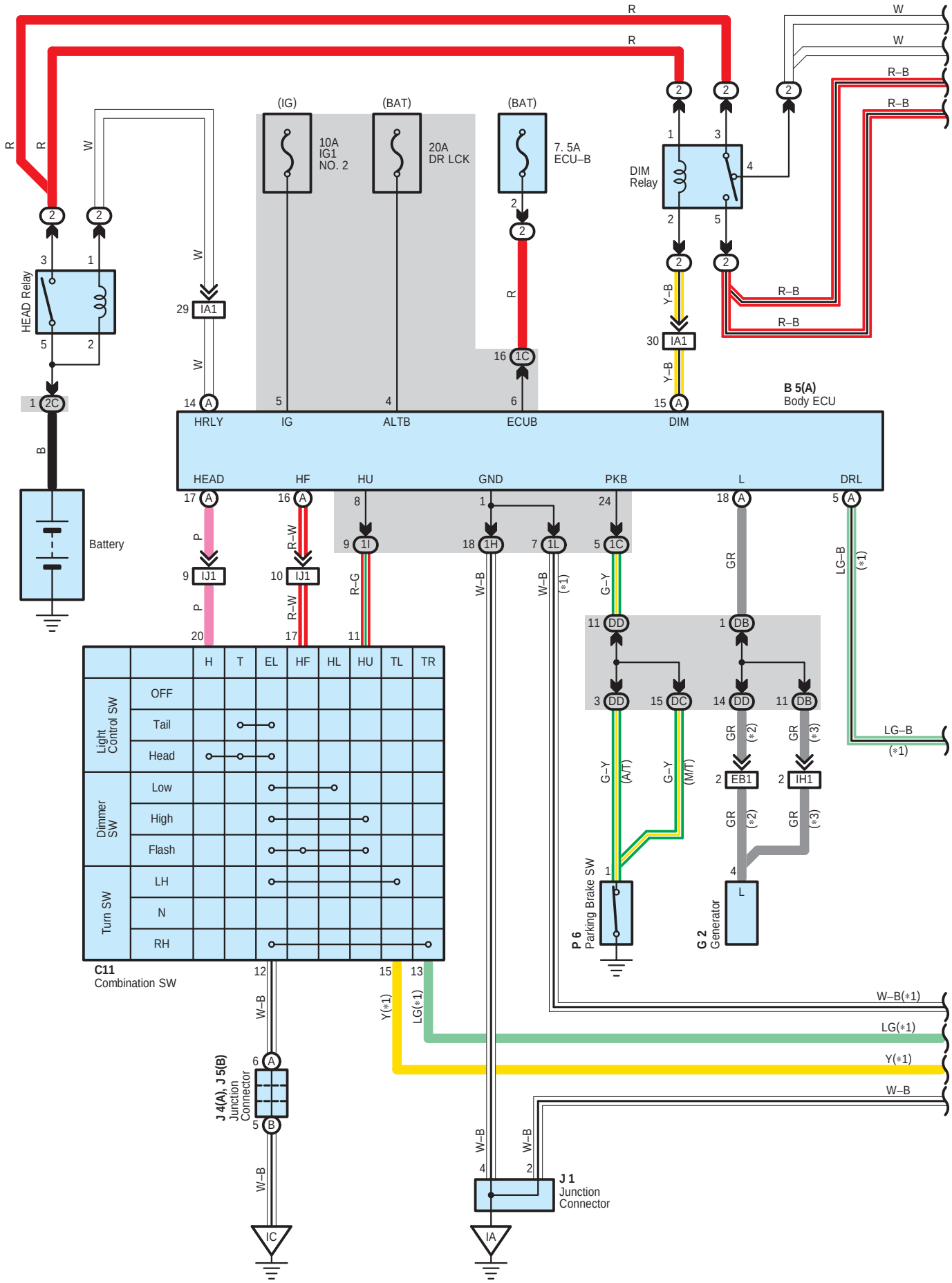
R
R
W
W
R–B
R–B
(IG)
(BAT)
(BAT)
10A
IG1
NO. 2
20A
DR LCK
7. 5A
ECU–B
DIM
Relay
HEAD Relay
Battery
B 5(A)
Body ECU
HRLY
IG
ALTB
ECUB
DIM
HEAD
HF
HU
GND
PKB
L
DRL
Y–B
R–B
W–B
R–G
R–W
G–Y
GR
LG–B
(*1)
(*2)
(*3)
(A/T)
(M/T)
C11
Combination SW
H
T
EL
HF
HL
HU
TL
TR
Light Control SW
Dimmer SW
Turn SW
OFF
Tail
Head
Low
High
Flash
LH
N
RH
P 6
Parking Brake SW
G 2
Generator
J 4(A), J 5(B)
Junction Connector
J 1
Junction Connector
IC
IA
W–B(*1)
LG(*1)
Y(*1)
W–B

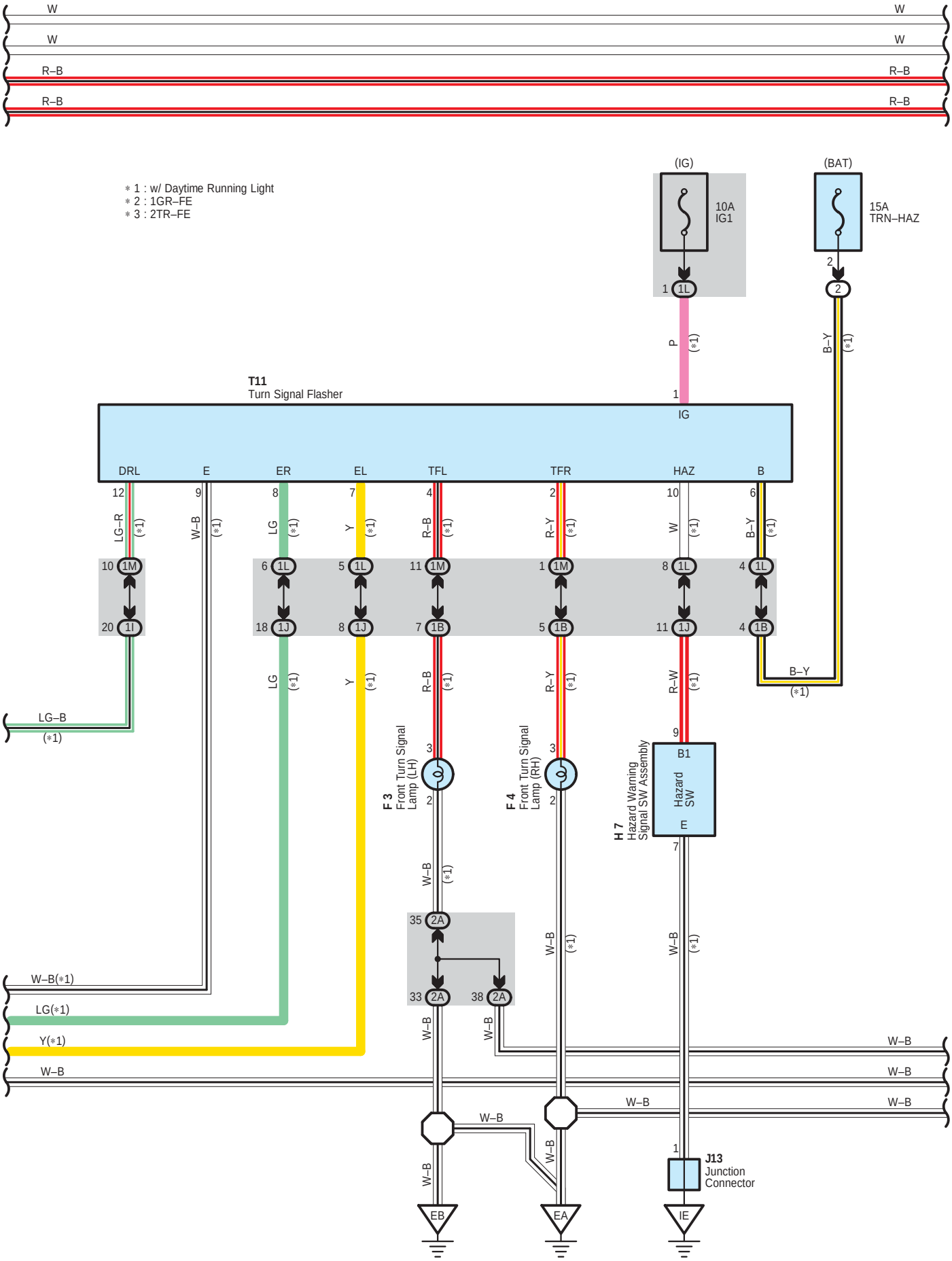
W
W
R–B
R–B
W
W
R–B
R–B
∗ 1 : w/ Daytime Running Light
∗ 2 : 1GR–FE
∗ 3 : 2TR–FE
(IG)
10A
IG1
(BAT)
15A
TRN–HAZ
T11
Turn Signal Flasher
IG
DRL
E
ER
EL
TFL
TFR
HAZ
B
LG–R
W–B
LG
Y
R–B
R–Y
W
B–Y
LG–B
W–B(∗1)
LG(∗1)
Y(∗1)
W–B
F 3
Front Turn Signal Lamp (LH)
F 4
Front Turn Signal Lamp (RH)
H 7
Hazard Warning Signal SW Assembly
Hazard SW
J13
Junction Connector
EB
EA
IE

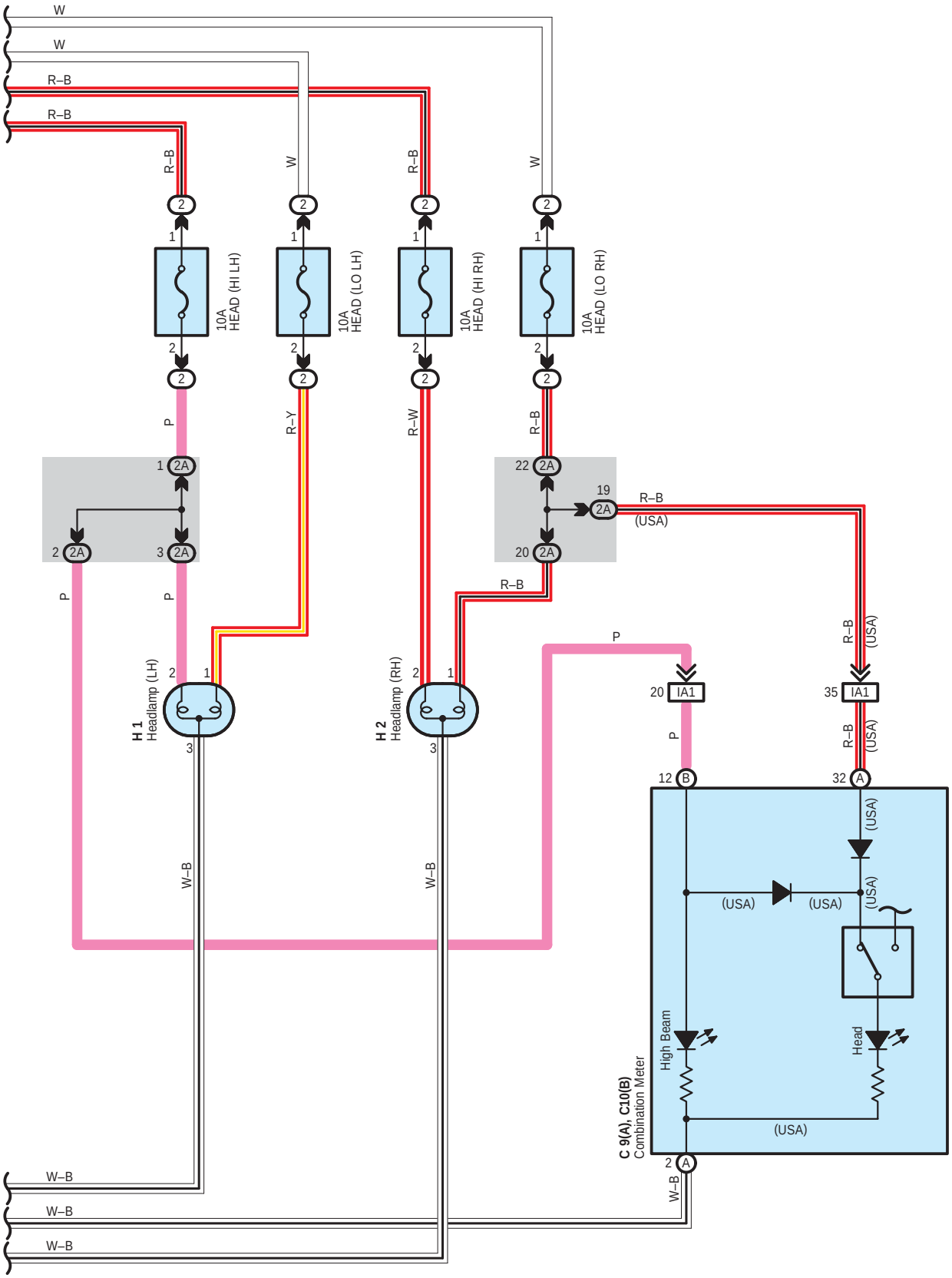
W
W
R–B
R–B
R–B
W
R–B
W
2
1
10A
HEAD (HI LH)
10A
HEAD (LO LH)
10A
HEAD (HI RH)
10A
HEAD (LO RH)
P
R–Y
R–W
R–B
1 2A
2 2A
3 2A
22 2A
20 2A
19 2A
R–B
(USA)
P
P
R–B
H 1
Headlamp (LH)
H 2
Headlamp (RH)
W–B
W–B
P
R–B
(USA)
20 IA1
35 IA1
12 B
32 A
(USA)
(USA)
(USA)
(USA)
High Beam
Head
(USA)
C 9(A), C10(B)
Combination Meter
2 A
W–B
W–B
W–B
W–B

System Outline

(w/ daytime running light)

* This system is designed to automatically activate the turn signal lights during the daytime to keep the car highly visible to other vehicles. This system is controlled by the body ECU.
  This system makes use of the turn signal lights as daytime running lights.
  For this reason, when the turn signal lights are operated, the daytime running lights function is interrupted momentarily, which, however, will be brought back into operation as soon as the interposed operation is over.
* This system is enabled when the conditions given below are met.

A) Ignition switch ON condition

B) Turn signal lamp switch OFF condition

C) Hazard lamp switch OFF condition

D) Light control switch OFF condition

E) Parking brake switch OFF condition (Parking brake out of operating condition)**

**: This system does not become active when the parking brake switch is ON. However, once the OFF signal of the parking brake switch is input into the body ECU, this system will become active thereafter, regardless of whether the parking brake switch is ON or OFF.

○ : Parts Location

Code	See Page	Code	See Page	Code	See Page
B5 A	44	F4	42 (2TR–FE)	H7	45
C9 A	44	G2	40 (1GR–FE)	J1	45
C10 B	44		42 (2TR–FE)	J4 A	45
C11	44	H1	41 (1GR–FE)	J5 B	45
F3	40 (1GR–FE)		43 (2TR–FE)	J13	45
	42 (2TR–FE)	H2	41 (1GR–FE)	P6	45
F4	40 (1GR–FE)		43 (2TR–FE)	T11	45

⬭ : Relay Blocks

Code	See Page	Relay Blocks (Relay Block Location)
2	24	Engine Room R/B (Engine Compartment Left)

⬭ : Junction Block and Wire Harness Connector

Code	See Page	Junction Block and Wire Harness (Connector Location)
1B	28	Engine Room Main Wire and Driver Side J/B (Lower Finish Panel)
1C		
1H	29	Instrument Panel Wire and Driver Side J/B (Lower Finish Panel)
1I		
1J		
1L	29	Relay Wire and Driver Side J/B (Lower Finish Panel)
1M		
2A	24	Engine Room J/B (Engine Compartment Left)
2C	24	Engine Room Main Wire and Engine Room J/B (Engine Compartment Left)
DB	34	Instrument Panel Wire and Instrument Panel J/B No.1 (Left Kick Panel)
DC	34	Engine Room Main Wire and Instrument Panel J/B No.1 (Left Kick Panel)
DD		

▭ : Connector Joining Wire Harness and Wire Harness

Code	See Page	Joining Wire Harness and Wire Harness (Connector Location)
EB1	52 (1GR–FE)	Engine No.2 Wire and Engine Room Main Wire (Inside of Engine Room R/B)
	53 (2TR–FE)	
IA1	54	Instrument Panel Wire and Engine Room Main Wire (Left Kick Panel)
IH1	55	Engine Wire and Instrument Panel Wire (Right Side of Glove Box)
IJ1	55	Instrument Panel Wire and Instrument Panel Wire (Right Kick Panel)

Headlight

▽ : **Ground Points**

Code	See Page	Ground Points Location
EA	52 (1GR–FE)	Front Right Fender
	53 (2TR–FE)	
EB	52 (1GR–FE)	Front Left Fender
	53 (2TR–FE)	
IA	54	Left Kick Panel
IC	54	Instrument Panel Brace RH
IE	54	Right Kick Panel

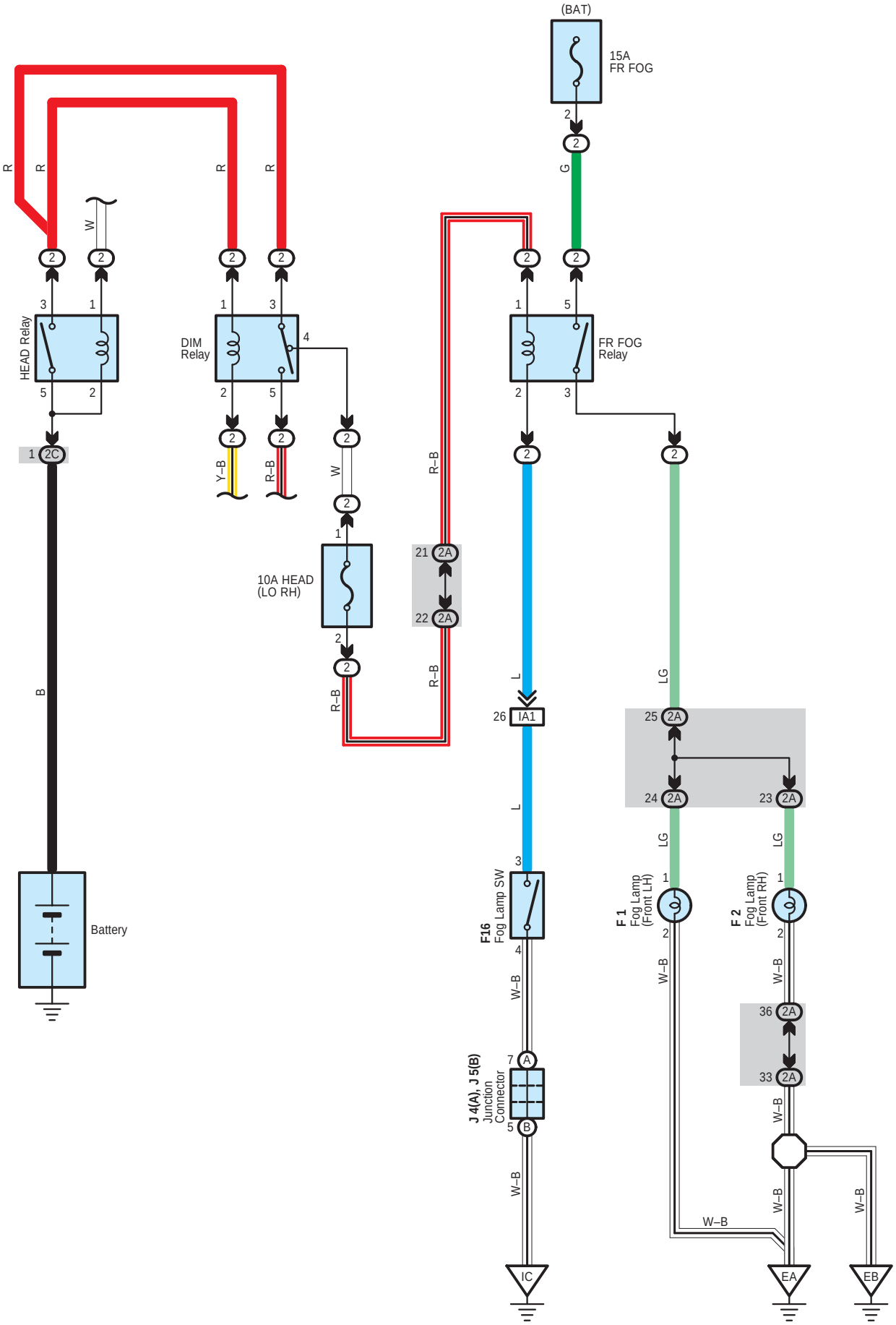
(BAT)
15A
FR FOG
HEAD Relay
DIM
Relay
FR FOG
Relay
10A HEAD
(LO RH)
Battery
F16
Fog Lamp SW
F 1
Fog Lamp
(Front LH)
F 2
Fog Lamp
(Front RH)
J 4(A), J 5(B)
Junction
Connector
IC
EA
EB
W–B
R–B
Y–B
L
LG
G
W
B
R

: Parts Location

Code	See Page	Code	See Page	Code	See Page
F1	40 (1GR–FE)	F16	44	J5 B	45
F2	40 (1GR–FE)	J4 A	45		

: Relay Blocks

Code	See Page	Relay Blocks (Relay Block Location)
2	24	Engine Room R/B (Engine Compartment Left)

: Junction Block and Wire Harness Connector

Code	See Page	Junction Block and Wire Harness (Connector Location)
2A	24	Engine Room J/B (Engine Compartment Left)
2C	24	Engine Room Main Wire and Engine Room J/B (Engine Compartment Left)

: Connector Joining Wire Harness and Wire Harness

Code	See Page	Joining Wire Harness and Wire Harness (Connector Location)
IA1	54	Instrument Panel Wire and Engine Room Main Wire (Left Kick Panel)

: Ground Points

Code	See Page	Ground Points Location
EA	52 (1GR–FE)	Front Right Fender
EB	52 (1GR–FE)	Front Left Fender
IC	54	Instrument Panel Brace RH

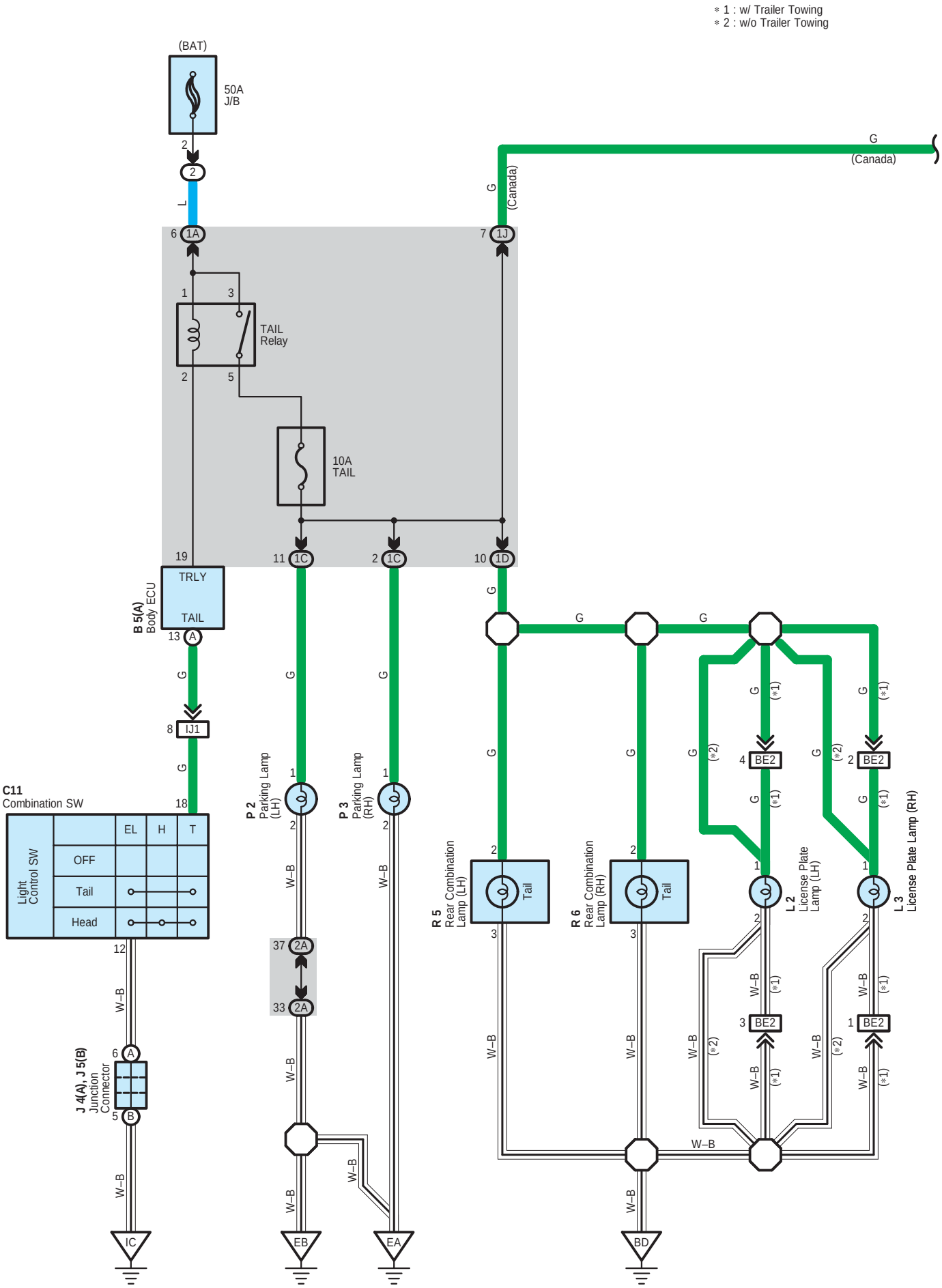
* 1 : w/ Trailer Towing
* 2 : w/o Trailer Towing
(BAT)
50A
J/B
2
2
L
6 1A
7 1J
G
(Canada)
G
(Canada)
1
3
TAIL
Relay
2
5
10A
TAIL
19
11 1C
2 1C
10 1D
B 5(A)
Body ECU
TRLY
TAIL
13 A
G
8 IJ1
G
C11
Combination SW
18
EL
H
T
Light
Control SW
OFF
Tail
Head
12
W–B
6 A
5 B
J 4(A), J 5(B)
Junction
Connector
W–B
IC
P 2
Parking Lamp
(LH)
P 3
Parking Lamp
(RH)
1
2
W–B
37 2A
33 2A
W–B
W–B
EB
W–B
EA
G
G
G
G
G
G
G
G
G
(*1)
(*2)
4 BE2
2 BE2
R 5
Rear Combination
Lamp (LH)
R 6
Rear Combination
Lamp (RH)
Tail
Tail
3
W–B
W–B
BD
L 2
License Plate
Lamp (LH)
L 3
License Plate Lamp (RH)
3 BE2
1 BE2
W–B

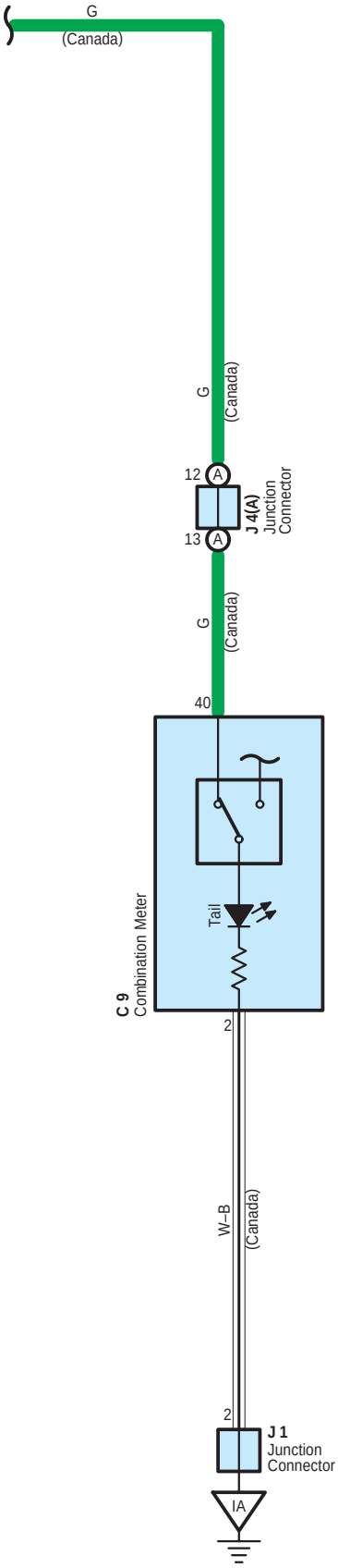
G
(Canada)
G
(Canada)
12
A
13
A
J 4(A)
Junction
Connector
G
(Canada)
40
Tail
C 9
Combination Meter
2
W–B
(Canada)
2
J 1
Junction
Connector
IA

Taillight

: Parts Location

Code	See Page	Code	See Page	Code	See Page
B5 A	44	L2	49 (*3)	R5	47 (*1)
C9	44	L3	46 (*1)		48 (*2)
C11	44		48 (*2)		49 (*3)
J1	45		49 (*3)	R6	47 (*1)
J4 A	45	P2	41 (1GR–FE)		48 (*2)
J5 B	45		43 (2TR–FE)		49 (*3)
L2	46 (*1)	P3	41 (1GR–FE)		
	48 (*2)		43 (2TR–FE)		

: Relay Blocks

Code	See Page	Relay Blocks (Relay Block Location)
2	24	Engine Room R/B (Engine Compartment Left)

: Junction Block and Wire Harness Connector

Code	See Page	Junction Block and Wire Harness (Connector Location)
1A	28	Engine Room Main Wire and Driver Side J/B (Lower Finish Panel)
1C		
1D	28	Frame Wire and Driver Side J/B (Lower Finish Panel)
1J	29	Instrument Panel Wire and Driver Side J/B (Lower Finish Panel)
2A	24	Engine Room J/B (Engine Compartment Left)

: Connector Joining Wire Harness and Wire Harness

Code	See Page	Joining Wire Harness and Wire Harness (Connector Location)
IJ1	55	Instrument Panel Wire and Instrument Panel Wire (Right Kick Panel)
BE2	56 (*1)	Frame No.3 Wire and Frame Wire (Behind the Trailer Socket)
	57 (*2)	

: Ground Points

Code	See Page	Ground Points Location
EA	52 (1GR–FE)	Front Right Fender
	53 (2TR–FE)	
EB	52 (1GR–FE)	Front Left Fender
	53 (2TR–FE)	
IA	54	Left Kick Panel
IC	54	Instrument Panel Brace RH
BD	56 (*1)	Near the Rear Differential
	57 (*2)	
	58 (*3)	

* 1 : Double Cab * 2 : Access Cab * 3 : Regular Cab * 4 : Separate Seat * 5 : Bench Seat

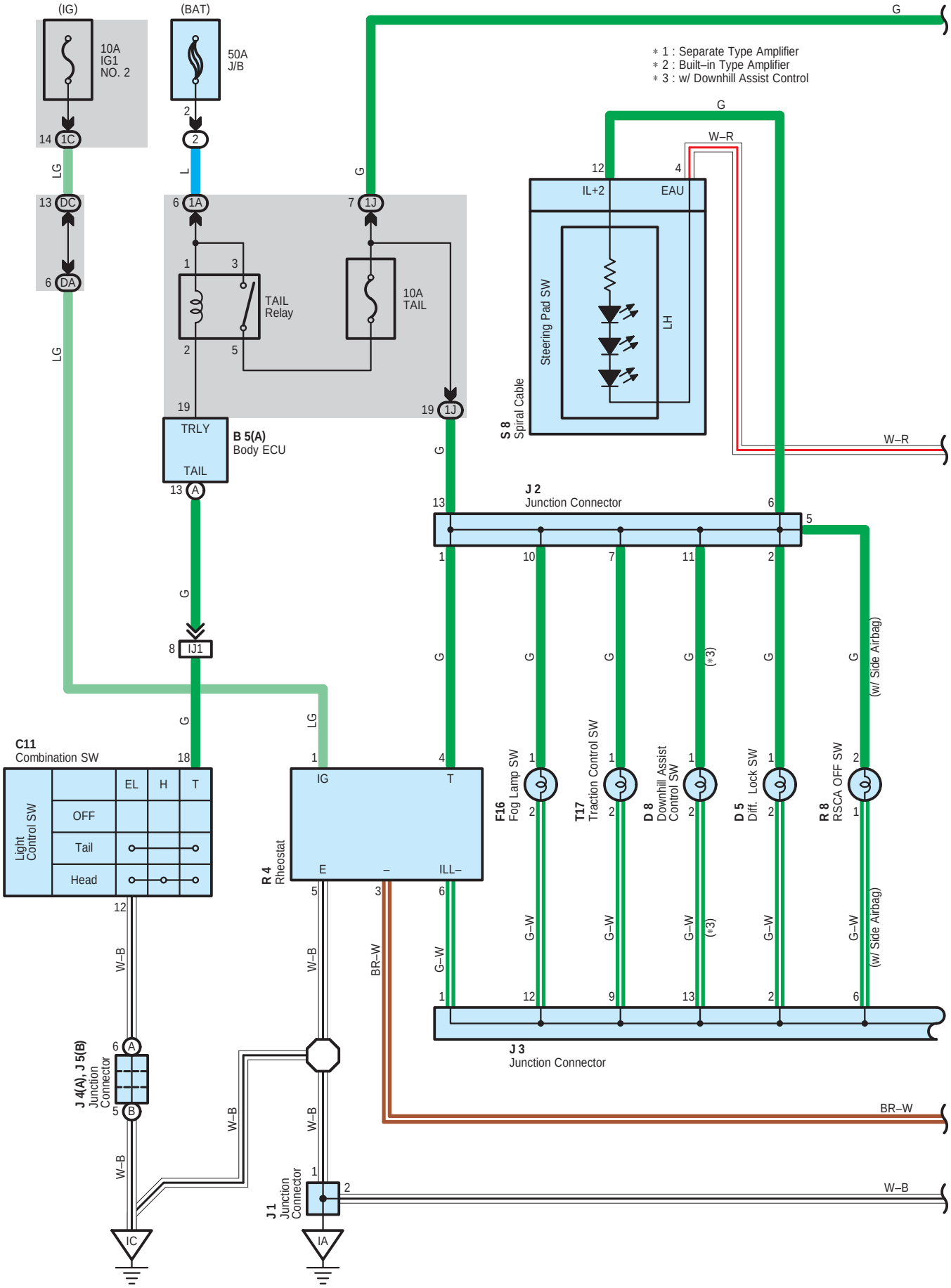
(IG)
(BAT)
10A
IG1
NO. 2
50A
J/B
14 1C
2
2
LG
L
G
13 DC
6 DA
6 1A
7 1J
1
3
2
5
TAIL
Relay
10A
TAIL
19
19 1J
TRLY
TAIL
B 5(A)
Body ECU
13 A
LG
G
8 IJ1
G
LG
C11
Combination SW
18
1
Light
Control SW
EL
H
T
OFF
Tail
Head
12
W–B
6 A
J 4(A), J 5(B)
Junction
Connector
5 B
W–B
W–B
IC
R 4
Rheostat
IG
T
E
–
ILL–
5
3
6
W–B
BR–W
G–W
1
2
W–B
J 1
Junction
Connector
IA
* 1 : Separate Type Amplifier
* 2 : Built–in Type Amplifier
* 3 : w/ Downhill Assist Control
G
W–R
12
4
IL+2
EAU
Steering Pad SW
LH
S 8
Spiral Cable
W–R
J 2
Junction Connector
13
6
5
1
10
7
11
2
G
(*3)
(w/ Side Airbag)
F16
Fog Lamp SW
T17
Traction Control SW
D 8
Downhill Assist
Control SW
D 5
Diff. Lock SW
R 8
RSCA OFF SW
12
9
13
2
6
J 3
Junction Connector
BR–W
W–B

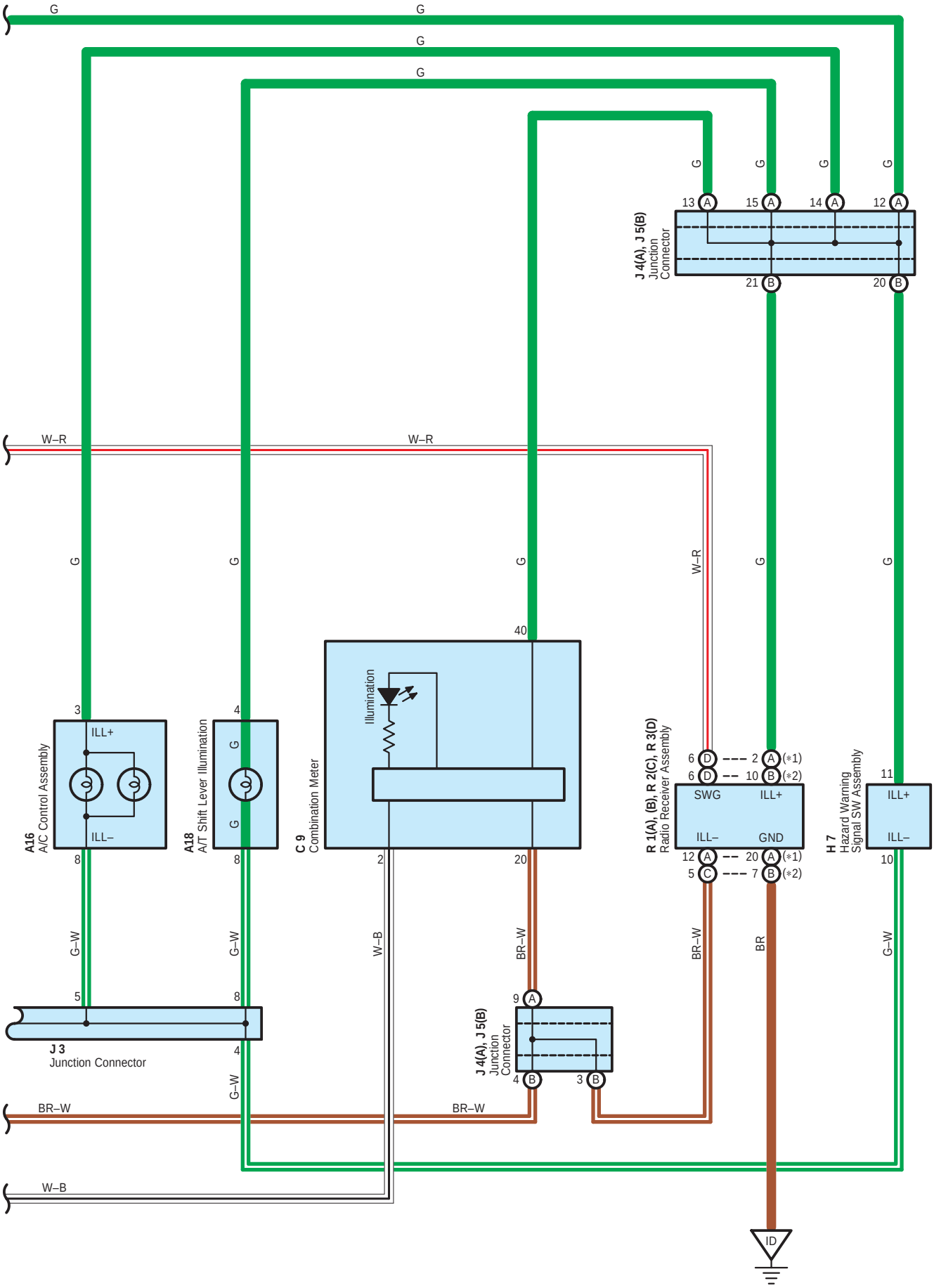
G
G
G
G
G
G
G
G
G
13 A
15 A
14 A
12 A
J 4(A), J 5(B)
Junction
Connector
21 B
20 B
W–R
W–R
W–R
G
G
G
G
G
40
3
4
ILL+
ILL–
A16
A/C Control Assembly
A18
A/T Shift Lever Illumination
Illumination
C 9
Combination Meter
6 D
6 D
2 A (*1)
10 B (*2)
SWG
ILL+
ILL–
GND
12 A
5 C
20 A (*1)
7 B (*2)
R 1(A), (B), R 2(C), R 3(D)
Radio Receiver Assembly
11
ILL+
ILL–
10
H 7
Hazard Warning
Signal SW Assembly
8
8
2
20
G–W
G–W
W–B
BR–W
BR–W
BR
G–W
5
8
9 A
J 3
Junction Connector
4
J 4(A), J 5(B)
Junction
Connector
4 B
3 B
G–W
BR–W
BR–W
W–B
ID

Illumination

: Parts Location

Code	See Page	Code	See Page	Code	See Page
A16	44	H7	45	R2 C	45
A18	44	J1	45	R3 D	45
B5 A	44	J2	45	R4	45
C9	44	J3	45	R8	45
C11	44	J4 A	45	S8	45
D5	44	J5 B	45	T17	45
D8	44	R1 A	45		
F16	44	R1 B	45		

: Relay Blocks

Code	See Page	Relay Blocks (Relay Block Location)
2	24	Engine Room R/B (Engine Compartment Left)

: Junction Block and Wire Harness Connector

Code	See Page	Junction Block and Wire Harness (Connector Location)
1A	28	Engine Room Main Wire and Driver Side J/B (Lower Finish Panel)
1C		
1J	29	Instrument Panel Wire and Driver Side J/B (Lower Finish Panel)
DA	34	Instrument Panel Wire and Instrument Panel J/B No.1 (Left Kick Panel)
DC	34	Engine Room Main Wire and Instrument Panel J/B No.1 (Left Kick Panel)

: Connector Joining Wire Harness and Wire Harness

Code	See Page	Joining Wire Harness and Wire Harness (Connector Location)
IJ1	55	Instrument Panel Wire and Instrument Panel Wire (Right Kick Panel)

: Ground Points

Code	See Page	Ground Points Location
IA	54	Left Kick Panel
IC	54	Instrument Panel Brace RH
ID		

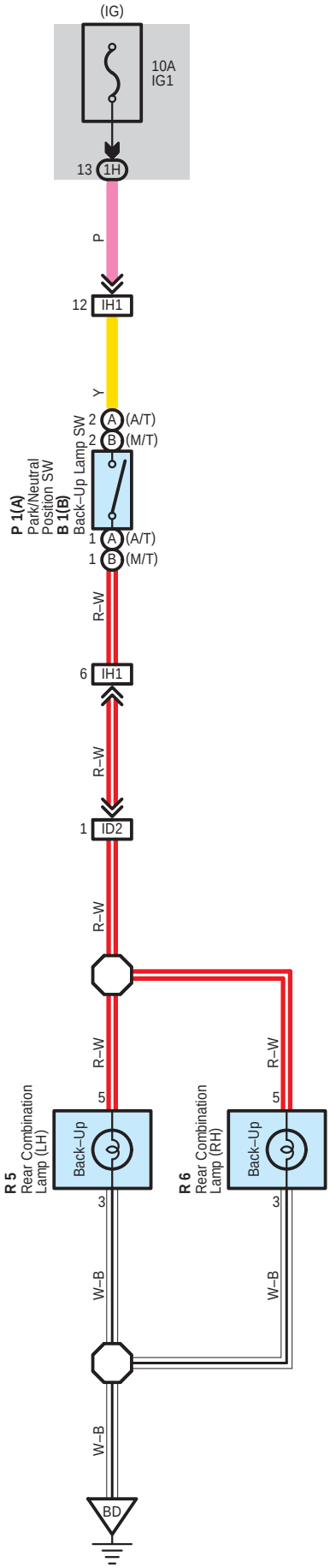
(IG)
10A
IG1
13
1H
P
12
IH1
Y
2
A
(A/T)
2
B
(M/T)
Back–Up Lamp SW
P 1(A)
Park/Neutral
Position SW
B 1(B)
1
A
(A/T)
1
B
(M/T)
R–W
6
IH1
R–W
1
ID2
R–W
R–W
R–W
5
5
R 5
Rear Combination
Lamp (LH)
Back–Up
R 6
Rear Combination
Lamp (RH)
Back–Up
3
3
W–B
W–B
W–B
BD

: Parts Location

Code		See Page	Code	See Page	Code	See Page
B1	B	40 (1GR–FE)	R5	47 (*1)	R6	48 (*2)
		42 (2TR–FE)		48 (*2)		49 (*3)
P1	A	41 (1GR–FE)		49 (*3)		
		43 (2TR–FE)	R6	47 (*1)		

: Junction Block and Wire Harness Connector

Code	See Page	Junction Block and Wire Harness (Connector Location)
1H	29	Instrument Panel Wire and Driver Side J/B (Lower Finish Panel)

: Connector Joining Wire Harness and Wire Harness

Code	See Page	Joining Wire Harness and Wire Harness (Connector Location)
ID2	54	Frame Wire and Instrument Panel Wire (Left Kick Panel)
IH1	55	Engine Wire and Instrument Panel Wire (Right Side of Glove Box)

: Ground Points

Code	See Page	Ground Points Location
BD	56 (*1)	Near the Rear Differential
	57 (*2)	
	58 (*3)	

* 1 : Double Cab * 2 : Access Cab * 3 : Regular Cab * 4 : Separate Seat * 5 : Bench Seat

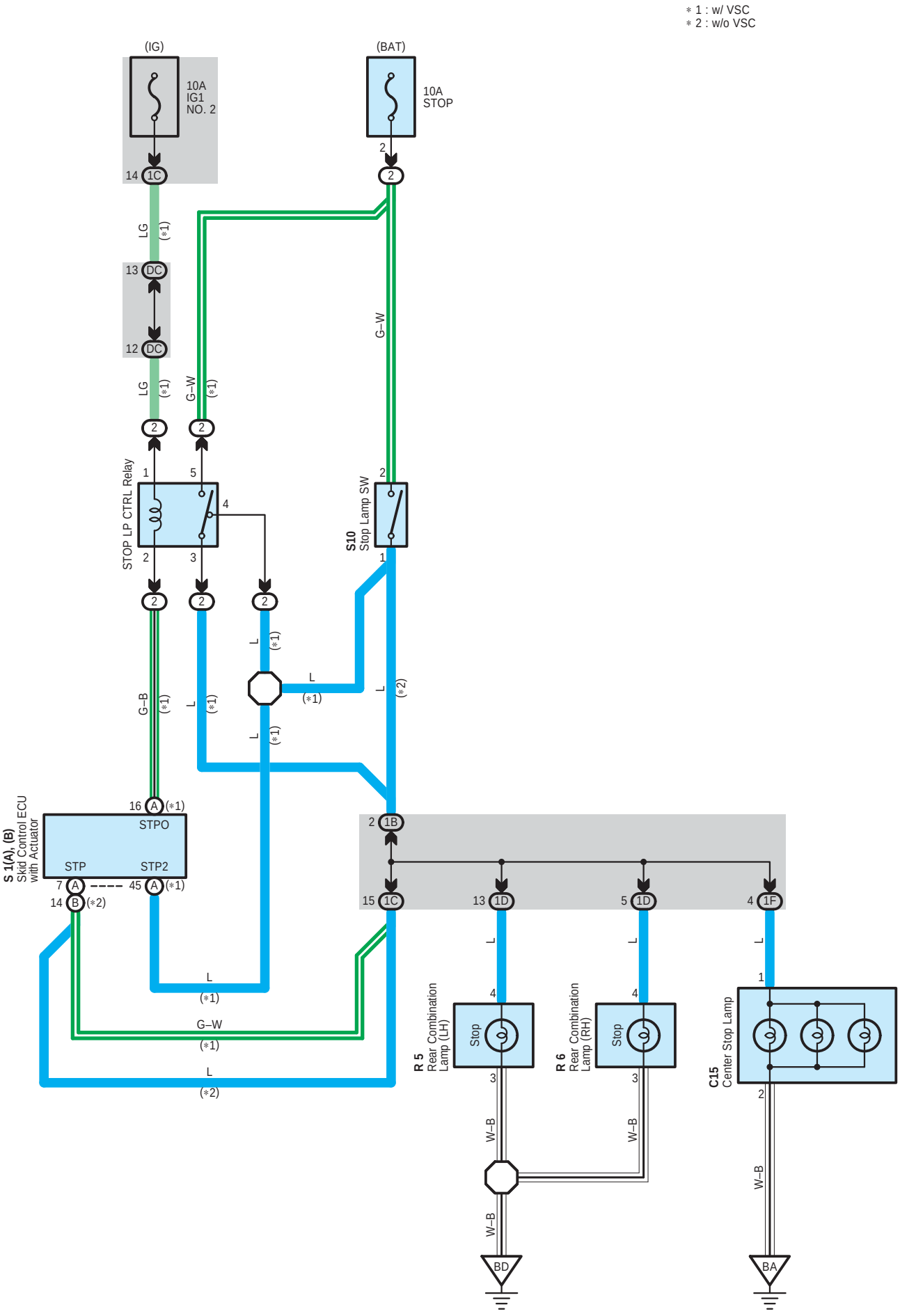
* 1 : w/ VSC
* 2 : w/o VSC
(IG)
10A
IG1
NO. 2
(BAT)
10A
STOP
14 1C
2
LG
(*1)
13 DC
12 DC
G–W
STOP LP CTRL Relay
S10
Stop Lamp SW
L
G–B
16 A (*1)
STPO
S 1(A), (B)
Skid Control ECU
with Actuator
STP
STP2
7 A
45 A (*1)
14 B (*2)
2 1B
15 1C
13 1D
5 1D
4 1F
R 5
Rear Combination
Lamp (LH)
R 6
Rear Combination
Lamp (RH)
Stop
C15
Center Stop Lamp
W–B
BD
BA

: Parts Location

Code	See Page	Code	See Page	Code	See Page
C15	46 (*1)	R5	49 (*3)	S1 A	43 (2TR–FE)
	48 (*2)	R6	47 (*1)	S1 B	41 (1GR–FE)
	49 (*3)		48 (*2)		43 (2TR–FE)
R5	47 (*1)		49 (*3)	S10	45
	48 (*2)	S1 A	41 (1GR–FE)		

: Relay Blocks

Code	See Page	Relay Blocks (Relay Block Location)
2	24	Engine Room R/B (Engine Compartment Left)

: Junction Block and Wire Harness Connector

Code	See Page	Junction Block and Wire Harness (Connector Location)
1B	28	Engine Room Main Wire and Driver Side J/B (Lower Finish Panel)
1C		
1D	28	Frame Wire and Driver Side J/B (Lower Finish Panel)
1F	28	Floor No.2 Wire and Driver Side J/B (Lower Finish Panel)
DC	34	Engine Room Main Wire and Instrument Panel J/B No.1 (Left Kick Panel)

: Ground Points

Code	See Page	Ground Points Location
BA	56 (*1)	Floor Seat Cross Member LH
	57 (*2)	
	58 (*3)	
BD	56 (*1)	Near the Rear Differential
	57 (*2)	
	58 (*3)	

* 1 : Double Cab * 2 : Access Cab * 3 : Regular Cab * 4 : Separate Seat * 5 : Bench Seat

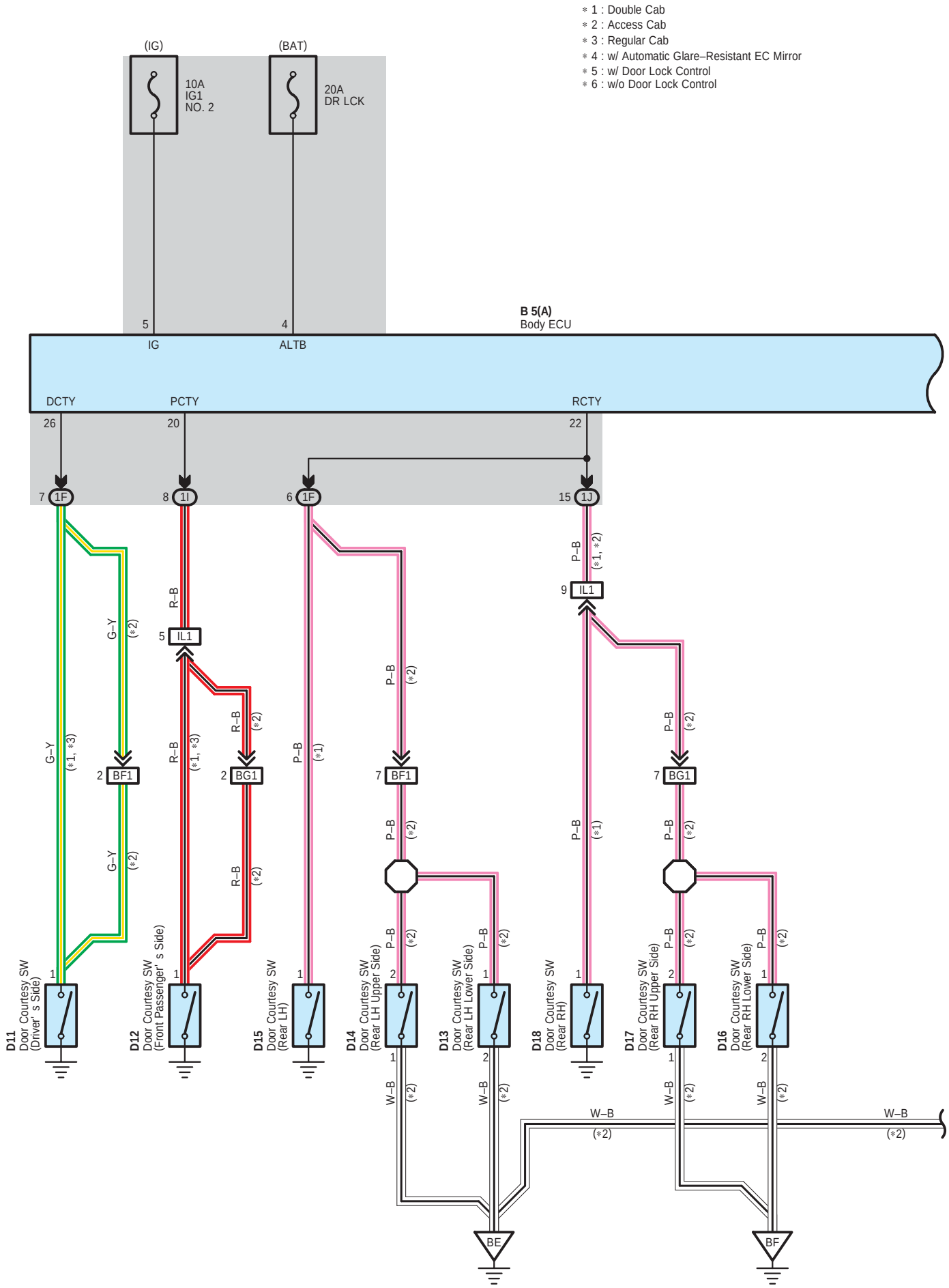
∗ 1 : Double Cab
∗ 2 : Access Cab
∗ 3 : Regular Cab
∗ 4 : w/ Automatic Glare–Resistant EC Mirror
∗ 5 : w/ Door Lock Control
∗ 6 : w/o Door Lock Control
(IG)
(BAT)
10A
IG1
NO. 2
20A
DR LCK
5
IG
4
ALTB
B 5(A)
Body ECU
DCTY
PCTY
RCTY
26
20
22
7 1F
8 1I
6 1F
15 1J
9 IL1
5 IL1
2 BF1
2 BG1
7 BF1
7 BG1
G–Y
R–B
P–B
W–B
(∗1, ∗3)
(∗1, ∗2)
(∗1)
(∗2)
D11 Door Courtesy SW (Driver' s Side)
D12 Door Courtesy SW (Front Passenger' s Side)
D15 Door Courtesy SW (Rear LH)
D14 Door Courtesy SW (Rear LH Upper Side)
D13 Door Courtesy SW (Rear LH Lower Side)
D18 Door Courtesy SW (Rear RH)
D17 Door Courtesy SW (Rear RH Upper Side)
D16 Door Courtesy SW (Rear RH Lower Side)
BE
BF

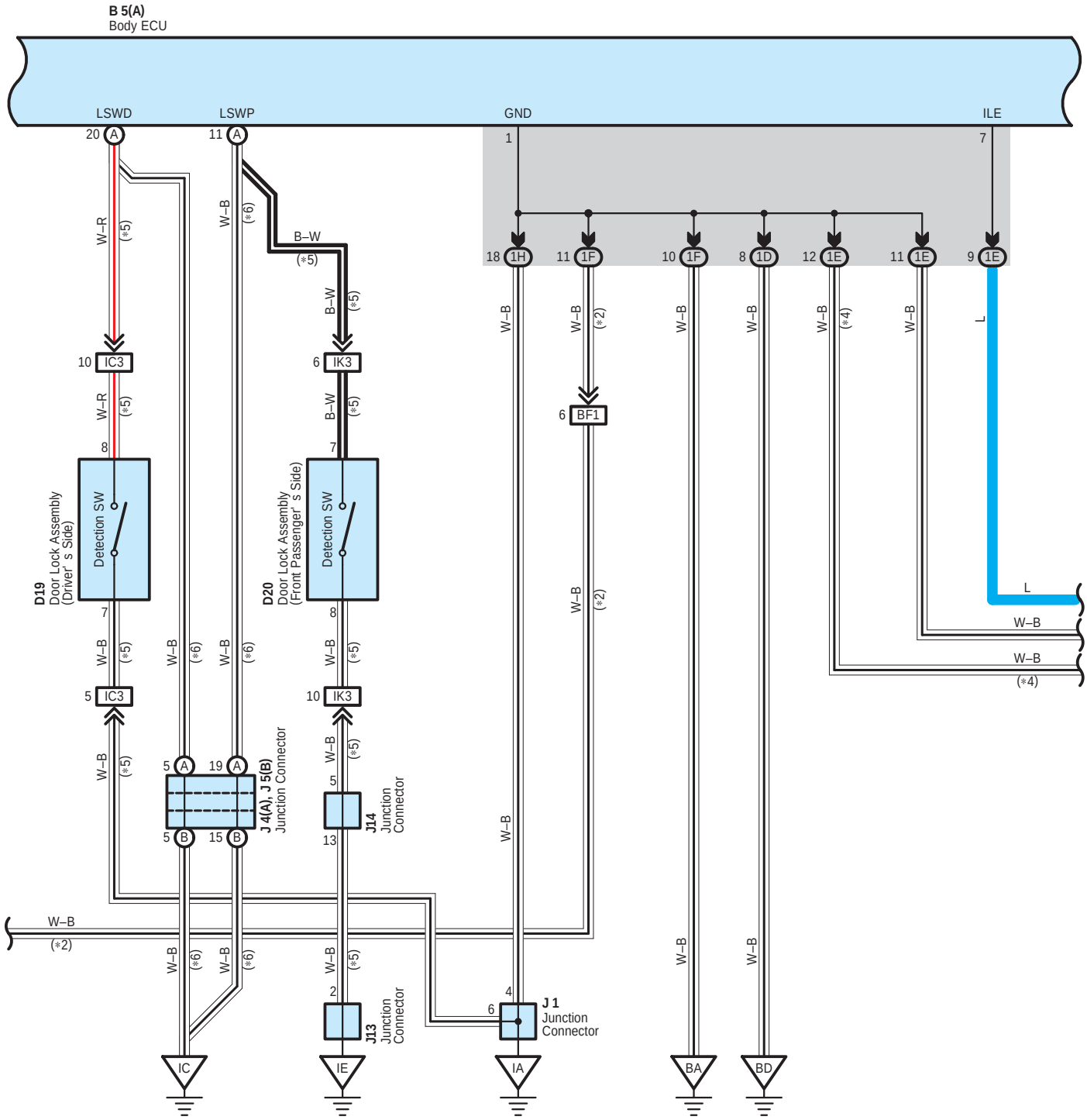
B 5(A)
Body ECU
LSWD
LSWP
GND
ILE
20 A
11 A
1
7
18 1H
11 1F
10 1F
8 1D
12 1E
11 1E
9 1E
W–R
(*5)
W–B
(*6)
B–W
(*5)
10 IC3
6 IK3
6 BF1
8
7
D19
Door Lock Assembly
(Driver' s Side)
Detection SW
D20
Door Lock Assembly
(Front Passenger' s Side)
Detection SW
(*2)
(*4)
L
W–B
(*4)
5 IC3
10 IK3
5 A
19 A
5 B
15 B
J 4(A), J 5(B)
Junction Connector
J14
Junction
Connector
13
(*2)
J 1
Junction
Connector
J13
Junction
Connector
IC
IE
IA
BA
BD

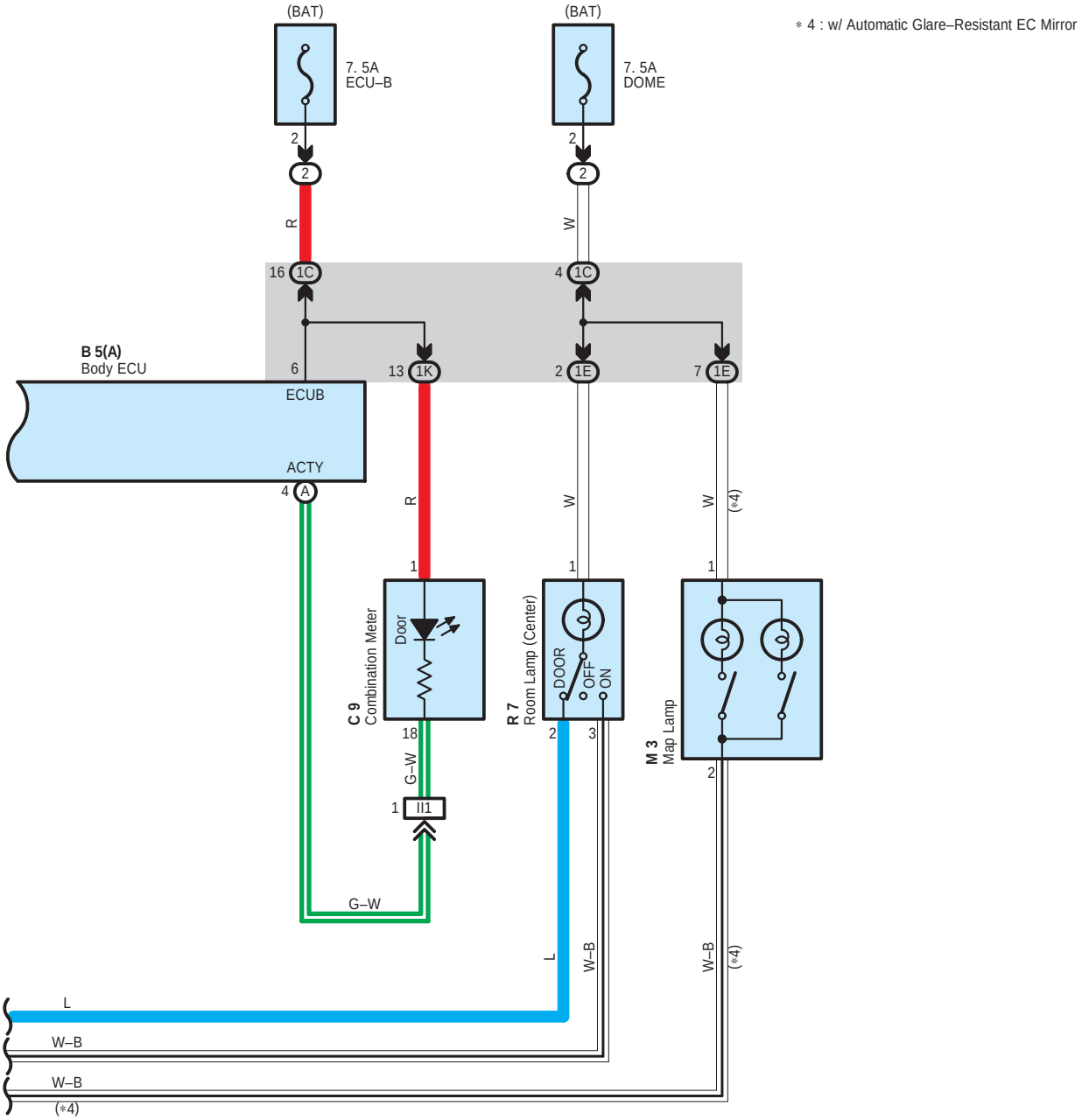
(BAT)
7. 5A
ECU–B
(BAT)
7. 5A
DOME
∗ 4 : w/ Automatic Glare–Resistant EC Mirror
B 5(A)
Body ECU
ECUB
ACTY
C 9
Combination Meter
Door
R 7
Room Lamp (Center)
DOOR
OFF
ON
M 3
Map Lamp
R
W
G–W
L
W–B
(∗4)

: Parts Location

Code	See Page	Code	See Page	Code	See Page
B5 A	44	D15	46 (*1)	J5 B	45
C9	44	D16	48 (*2)	J13	45
D11	46 (*1)	D17	48 (*2)	J14	45
	48 (*2)	D18	46 (*1)	M3	46 (*1)
	49 (*3)	D19	46 (*1)		48 (*2)
D12	46 (*1)		48 (*2)	R7	47 (*1)
	48 (*2)	D20	46 (*1)		48 (*2)
	49 (*3)		48 (*2)		49 (*3)
D13	48 (*2)	J1	45		
D14	48 (*2)	J4 A	45		

: Relay Blocks

Code	See Page	Relay Blocks (Relay Block Location)
2	24	Engine Room R/B (Engine Compartment Left)

: Junction Block and Wire Harness Connector

Code	See Page	Junction Block and Wire Harness (Connector Location)
1C	28	Engine Room Main Wire and Driver Side J/B (Lower Finish Panel)
1D	28	Frame Wire and Driver Side J/B (Lower Finish Panel)
1E	28	Roof Wire and Driver Side J/B (Lower Finish Panel)
1F	28	Floor No.2 Wire and Driver Side J/B (Lower Finish Panel)
1H	29	Instrument Panel Wire and Driver Side J/B (Lower Finish Panel)
1I		
1J		
1K		

: Connector Joining Wire Harness and Wire Harness

Code	See Page	Joining Wire Harness and Wire Harness (Connector Location)
IC3	54	Front Door LH Wire and Instrument Panel Wire (Left Kick Panel)
II1	55	Instrument Panel Wire and Instrument Panel Wire (Instrument Panel Brace RH)
IK3	55	Front Door RH Wire and Instrument Panel Wire (Right Kick Panel)
IL1	55	Instrument Panel Wire and Floor Wire (Right Kick Panel)
BF1	57 (*2)	Rear Door No.2 Wire and Floor No.2 Wire (Under the Left Quarter Panel)
BG1	57 (*2)	Rear Door No.1 Wire and Floor Wire (Under the Right Quarter Panel)

: Ground Points

Code	See Page	Ground Points Location
IA	54	Left Kick Panel
IC	54	Instrument Panel Brace RH
IE	54	Right Kick Panel
BA	56 (*1)	Floor Seat Cross Member LH
	57 (*2)	
	58 (*3)	
BD	56 (*1)	Near the Rear Differential
	57 (*2)	
	58 (*3)	
BE	57 (*2)	Inside of the Access Door LH
BF	57 (*2)	Inside of the Access Door RH

* 1 : Double Cab * 2 : Access Cab * 3 : Regular Cab * 4 : Separate Seat * 5 : Bench Seat

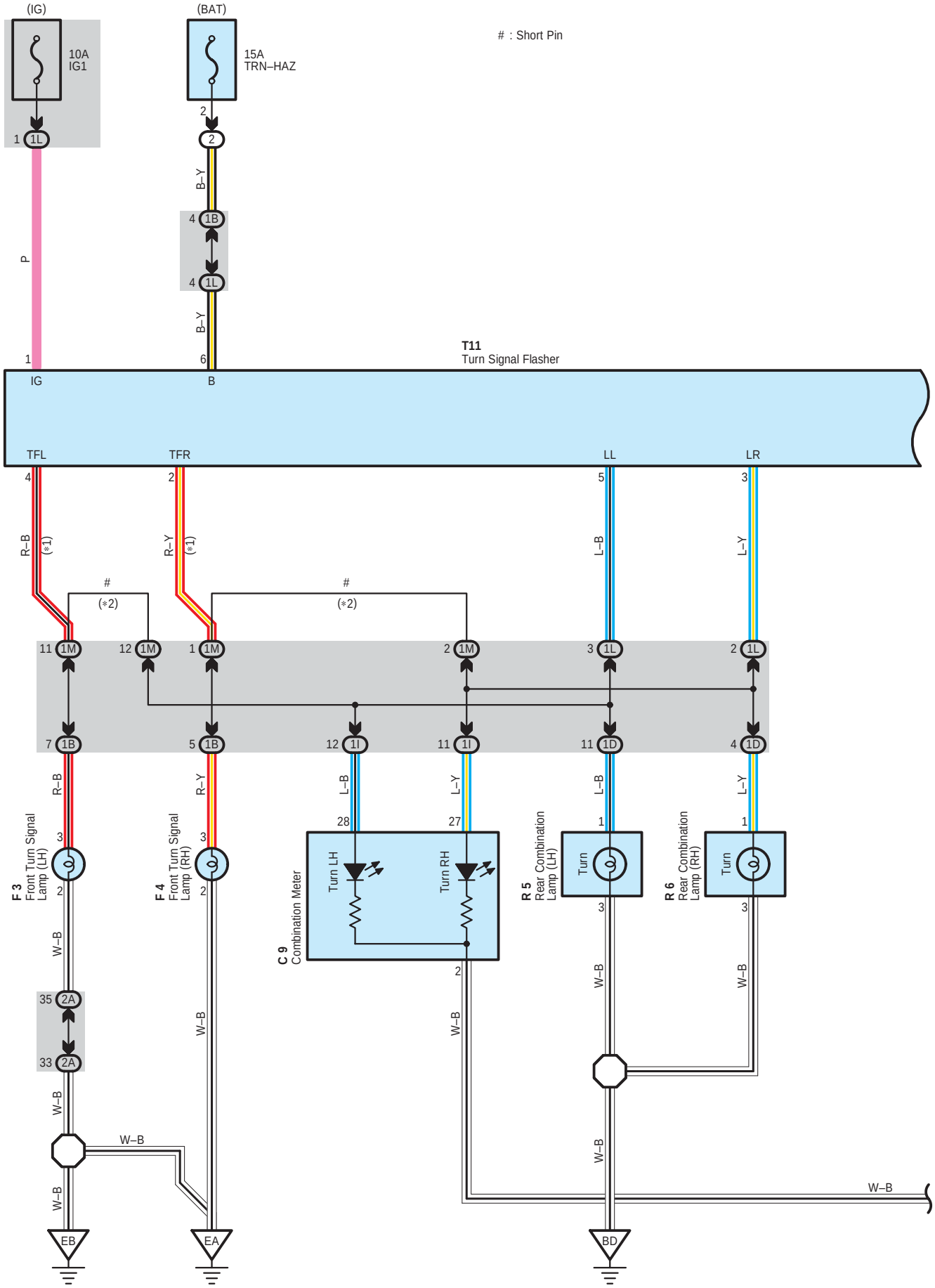
(IG)
(BAT)
: Short Pin
10A
IG1
15A
TRN–HAZ
T11
Turn Signal Flasher
IG
B
TFL
TFR
LL
LR
R–B
R–Y
L–B
L–Y
B–Y
P
W–B
(*1)
(*2)
F 3
Front Turn Signal Lamp (LH)
F 4
Front Turn Signal Lamp (RH)
C 9
Combination Meter
Turn LH
Turn RH
R 5
Rear Combination Lamp (LH)
R 6
Rear Combination Lamp (RH)
Turn
EB
EA
BD

∗ 1 : w/ Daytime Running Light
∗ 2 : w/o Daytime Running Light

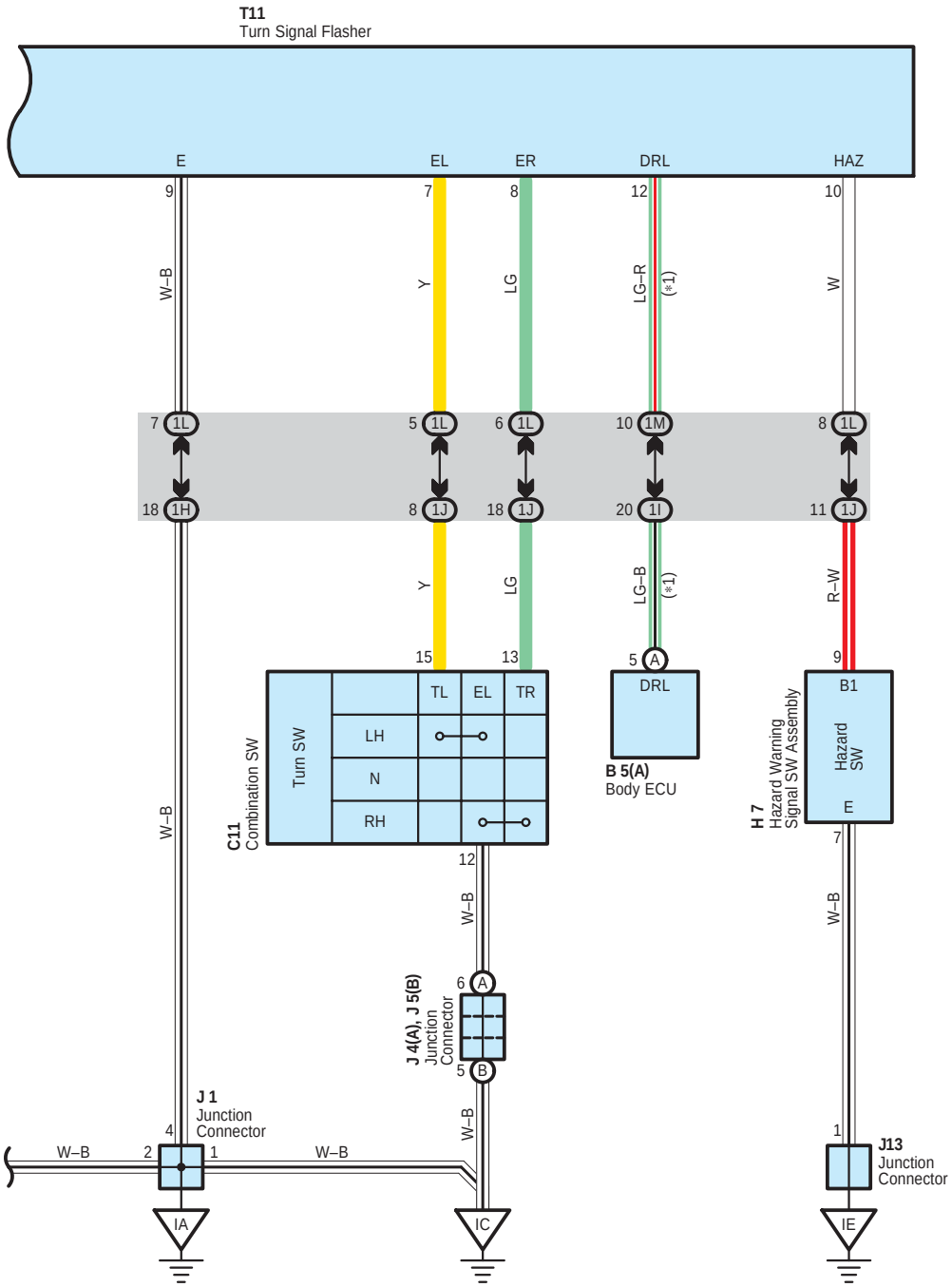

Turn Signal and Hazard Warning Light

: Parts Location

Code	See Page	Code	See Page	Code	See Page
B5 A	44	H7	45	R5	49 (*3)
C9	44	J1	45	R6	47 (*1)
C11	44	J4 A	45		48 (*2)
F3	40 (1GR–FE)	J5 B	45		49 (*3)
	42 (2TR–FE)	J13	45	T11	45
F4	40 (1GR–FE)	R5	47 (*1)		
	42 (2TR–FE)		48 (*2)		

: Relay Blocks

Code	See Page	Relay Blocks (Relay Block Location)
2	24	Engine Room R/B (Engine Compartment Left)

: Junction Block and Wire Harness Connector

Code	See Page	Junction Block and Wire Harness (Connector Location)
1B	28	Engine Room Main Wire and Driver Side J/B (Lower Finish Panel)
1D	28	Frame Wire and Driver Side J/B (Lower Finish Panel)
1H	29	Instrument Panel Wire and Driver Side J/B (Lower Finish Panel)
1I		
1J		
1L	29	Relay Wire and Driver Side J/B (Lower Finish Panel)
1M		
2A	24	Engine Room J/B (Engine Compartment Left)

: Ground Points

Code	See Page	Ground Points Location
EA	52 (1GR–FE)	Front Right Fender
	53 (2TR–FE)	
EB	52 (1GR–FE)	Front Left Fender
	53 (2TR–FE)	
IA	54	Left Kick Panel
IC	54	Instrument Panel Brace RH
IE	54	Right Kick Panel
BD	56 (*1)	Near the Rear Differential
	57 (*2)	
	58 (*3)	

* 1 : Double Cab * 2 : Access Cab * 3 : Regular Cab * 4 : Separate Seat * 5 : Bench Seat

Light Auto Turn Off System

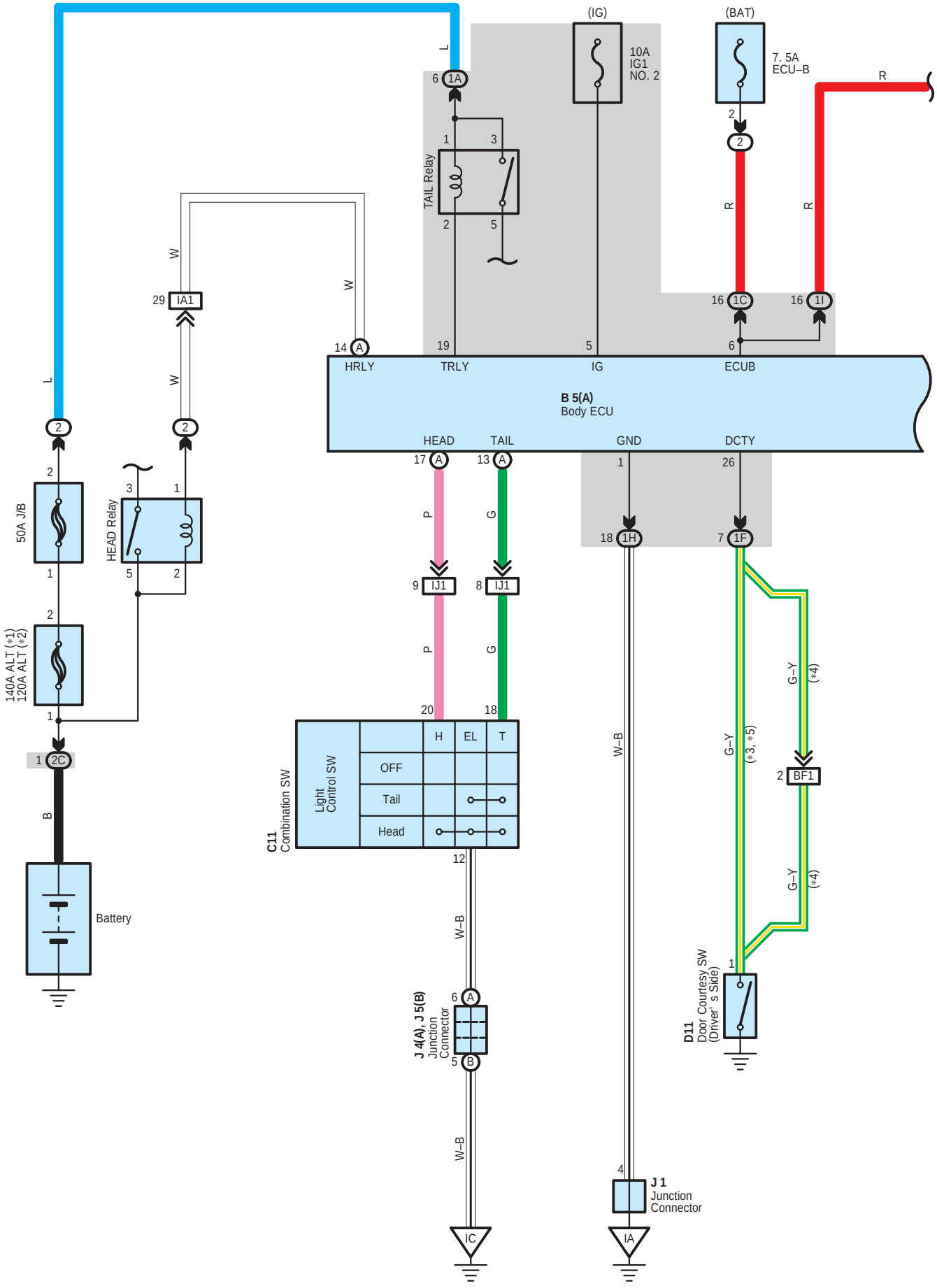

* 1 : w/ Trailer Towing
* 2 : w/o Trailer Towing
* 3 : Double Cab
* 4 : Access Cab
* 5 : Regular Cab

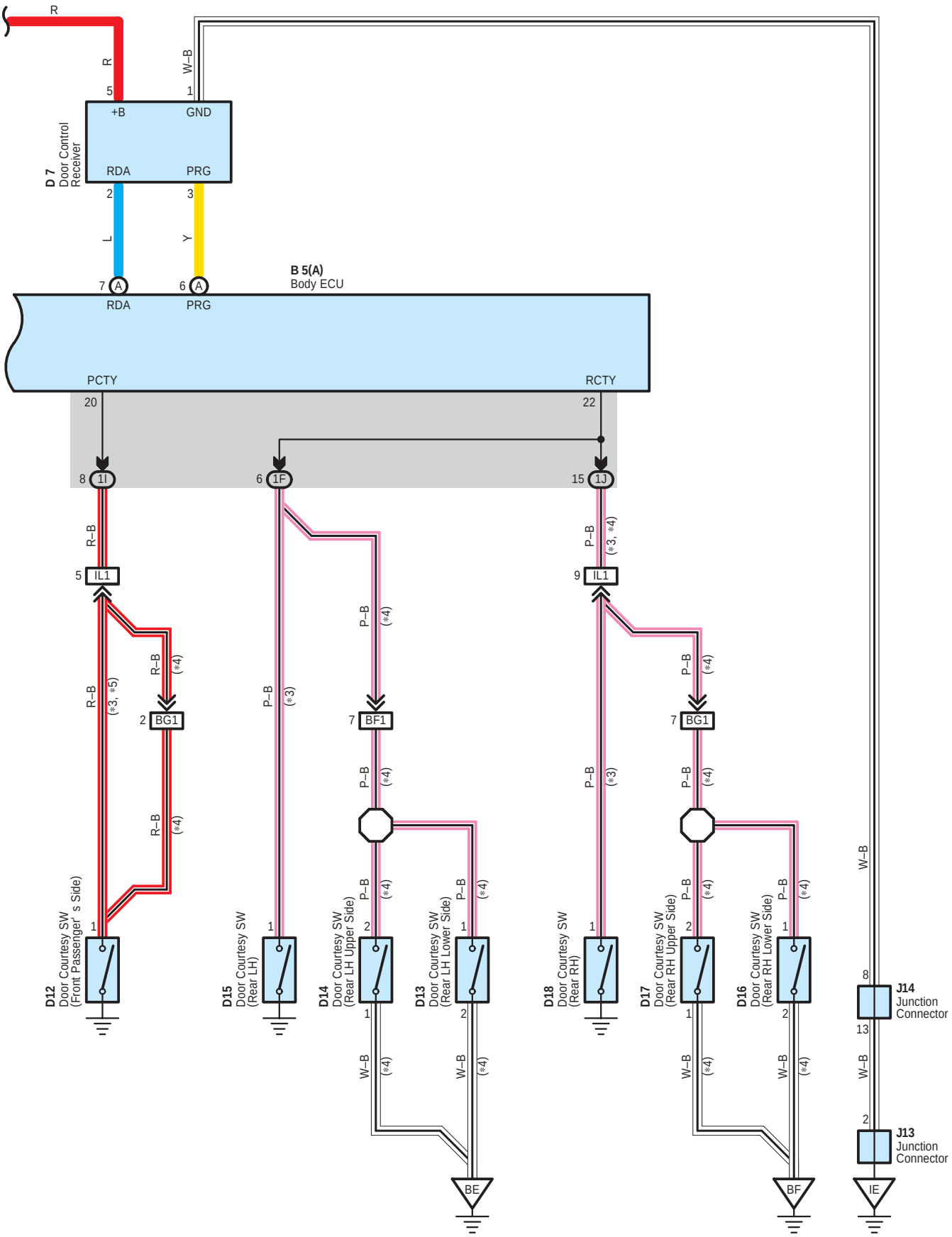

Light Auto Turn Off System

System Outline

* When the other lamps than headlamps are lit under 'TAIL' or 'AUTO' condition of the light control SW, the tail lamps and front fog lamps are turned OFF if the ignition SW is turned from ON to OFF, and the driver side door is opened from closed condition.
* When the headlamps are lit under 'HEAD' or 'AUTO' condition of the light control SW, if the ignition SW is turned from ON to OFF, and the light OFF delay time (30 seconds) has passed since all the doors are closed from open condition or under all the door locked condition, operating the wireless door lock function turns OFF the headlamps, tail lamps and front fog lamps.

: Parts Location

Code	See Page	Code	See Page	Code	See Page
B5 A	44	D12	48 (*2)	D18	46 (*1)
C11	44		49 (*3)	J1	45
D7	44	D13	48 (*2)	J4 A	45
D11	46 (*1)	D14	48 (*2)	J5 B	45
	48 (*2)	D15	46 (*1)	J13	45
	49 (*3)	D16	48 (*2)	J14	45
D12	46 (*1)	D17	48 (*2)		

: Relay Blocks

Code	See Page	Relay Blocks (Relay Block Location)
2	24	Engine Room R/B (Engine Compartment Left)

: Junction Block and Wire Harness Connector

Code	See Page	Junction Block and Wire Harness (Connector Location)
1A	28	Engine Room Main Wire and Driver Side J/B (Lower Finish Panel)
1C		
1F	28	Floor No.2 Wire and Driver Side J/B (Lower Finish Panel)
1H	29	Instrument Panel Wire and Driver Side J/B (Lower Finish Panel)
1I		
1J		
2C	24	Engine Room Main Wire and Engine Room J/B (Engine Compartment Left)

: Connector Joining Wire Harness and Wire Harness

Code	See Page	Joining Wire Harness and Wire Harness (Connector Location)
IA1	54	Instrument Panel Wire and Engine Room Main Wire (Left Kick Panel)
IJ1	55	Instrument Panel Wire and Instrument Panel Wire (Right Kick Panel)
IL1	55	Instrument Panel Wire and Floor Wire (Right Kick Panel)
BF1	57 (*2)	Rear Door No.2 Wire and Floor No.2 Wire (Under the Left Quarter Panel)
BG1	57 (*2)	Rear Door No.1 Wire and Floor Wire (Under the Right Quarter Panel)

: Ground Points

Code	See Page	Ground Points Location
IA	54	Left Kick Panel
IC	54	Instrument Panel Brace RH
IE	54	Right Kick Panel
BE	57 (*2)	Inside of the Access Door LH
BF	57 (*2)	Inside of the Access Door RH

* 1 : Double Cab * 2 : Access Cab * 3 : Regular Cab * 4 : Separate Seat * 5 : Bench Seat

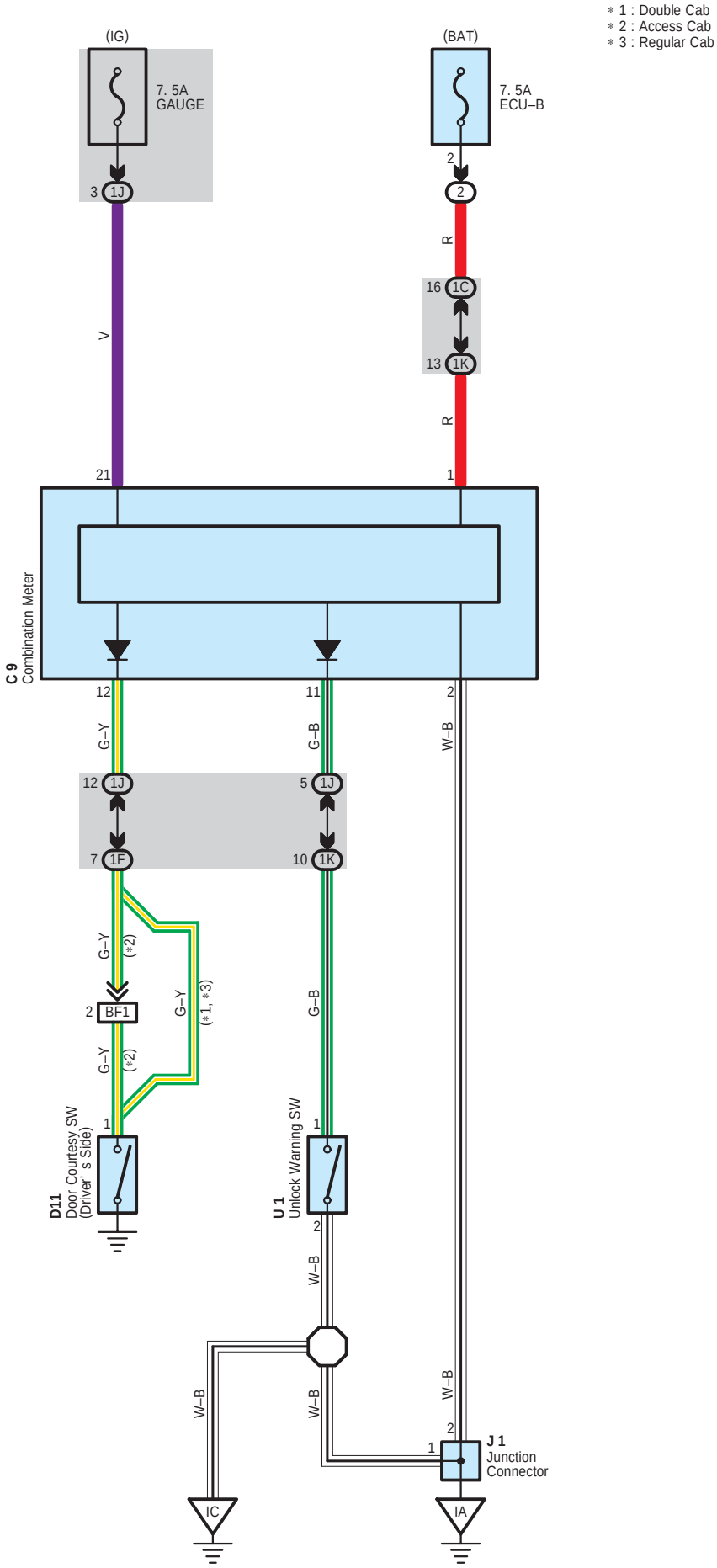
* 1 : Double Cab
* 2 : Access Cab
* 3 : Regular Cab
(IG)
(BAT)
7. 5A
GAUGE
7. 5A
ECU–B
3 1J
2
2
R
16 1C
13 1K
R
V
21
1
C 9
Combination Meter
12
11
2
G–Y
G–B
W–B
12 1J
5 1J
7 1F
10 1K
G–Y
(*2)
G–Y
(*1, *3)
G–B
2 BF1
G–Y
(*2)
1
1
D11
Door Courtesy SW
(Driver' s Side)
U 1
Unlock Warning SW
2
W–B
W–B
W–B
W–B
2
1
J 1
Junction
Connector
IC
IA

System Outline

Key Reminder System

With the ignition key inserted in the key cylinder (Unlock warning SW on), the ignition SW still off and driver's door open (Door courtesy SW on), when a signal is input to TERMINAL 12 of the combination meter, the combination meter operates, current flows from TERMINAL 1 of the combination meter to TERMINAL 2 GROUND and key reminder buzzer sounds.

: Parts Location

Code	See Page	Code	See Page	Code	See Page
C9	44	D11	48 (*2)	J1	45
D11	46 (*1)		49 (*3)	U1	45

: Relay Blocks

Code	See Page	Relay Blocks (Relay Block Location)
2	24	Engine Room R/B (Engine Compartment Left)

: Junction Block and Wire Harness Connector

Code	See Page	Junction Block and Wire Harness (Connector Location)
1C	28	Engine Room Main Wire and Driver Side J/B (Lower Finish Panel)
1F	28	Floor No.2 Wire and Driver Side J/B (Lower Finish Panel)
1J	29	Instrument Panel Wire and Driver Side J/B (Lower Finish Panel)
1K		

: Connector Joining Wire Harness and Wire Harness

Code	See Page	Joining Wire Harness and Wire Harness (Connector Location)
BF1	57 (*2)	Rear Door No.2 Wire and Floor No.2 Wire (Under the Left Quarter Panel)

: Ground Points

Code	See Page	Ground Points Location
IA	54	Left Kick Panel
IC	54	Instrument Panel Brace RH

* 1 : Double Cab * 2 : Access Cab * 3 : Regular Cab * 4 : Separate Seat * 5 : Bench Seat

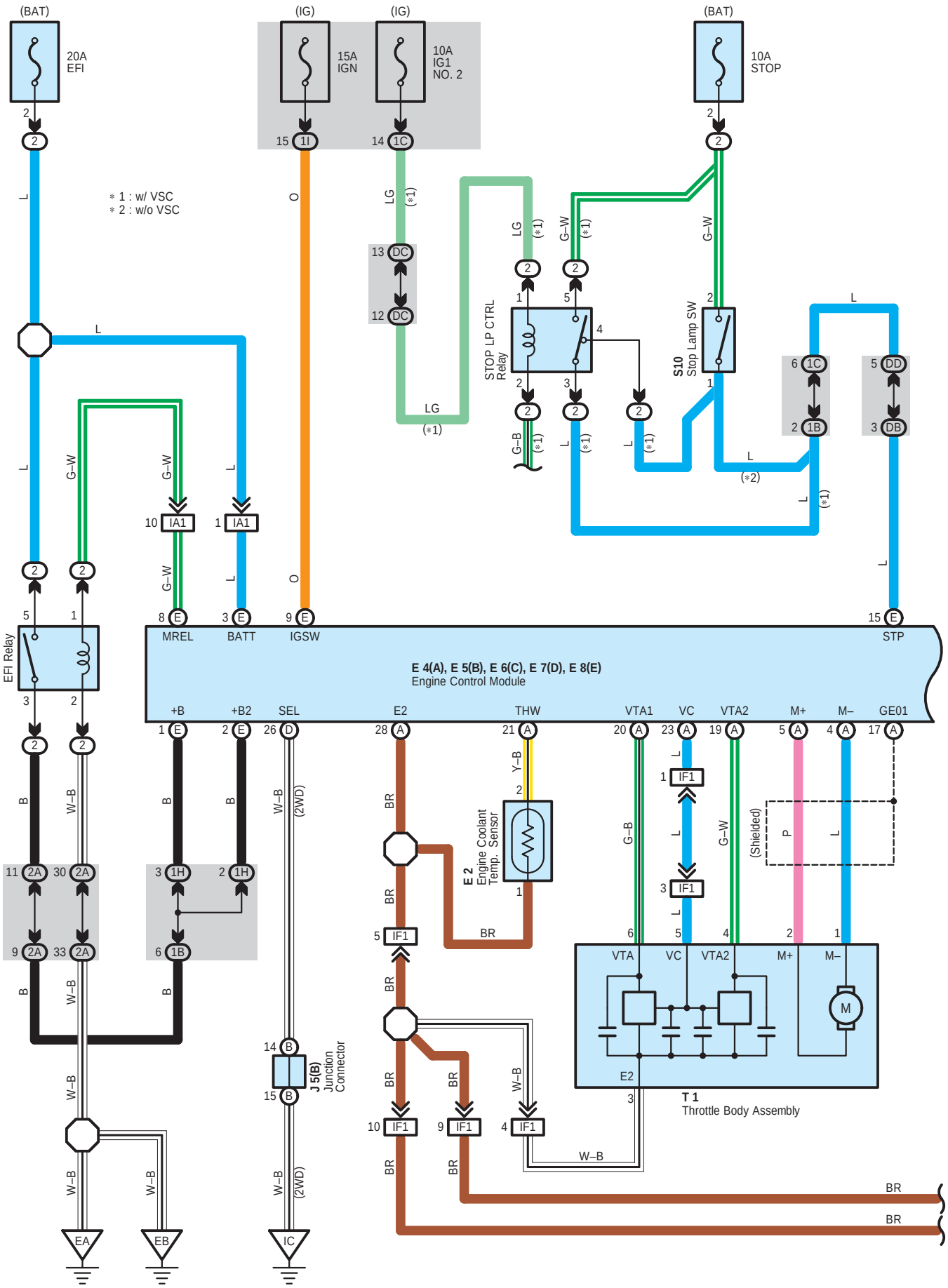
(BAT)
20A
EFI
(IG)
15A
IGN
(IG)
10A
IG1
NO. 2
(BAT)
10A
STOP
* 1 : w/ VSC
* 2 : w/o VSC
STOP LP CTRL
Relay
S10
Stop Lamp SW
EFI Relay
E 4(A), E 5(B), E 6(C), E 7(D), E 8(E)
Engine Control Module
MREL
BATT
IGSW
STP
+B
+B2
SEL
E2
THW
VTA1
VC
VTA2
M+
M–
GE01
E 2
Engine Coolant
Temp. Sensor
J 5(B)
Junction
Connector
(2WD)
T 1
Throttle Body Assembly
(Shielded)
EA
EB
IC

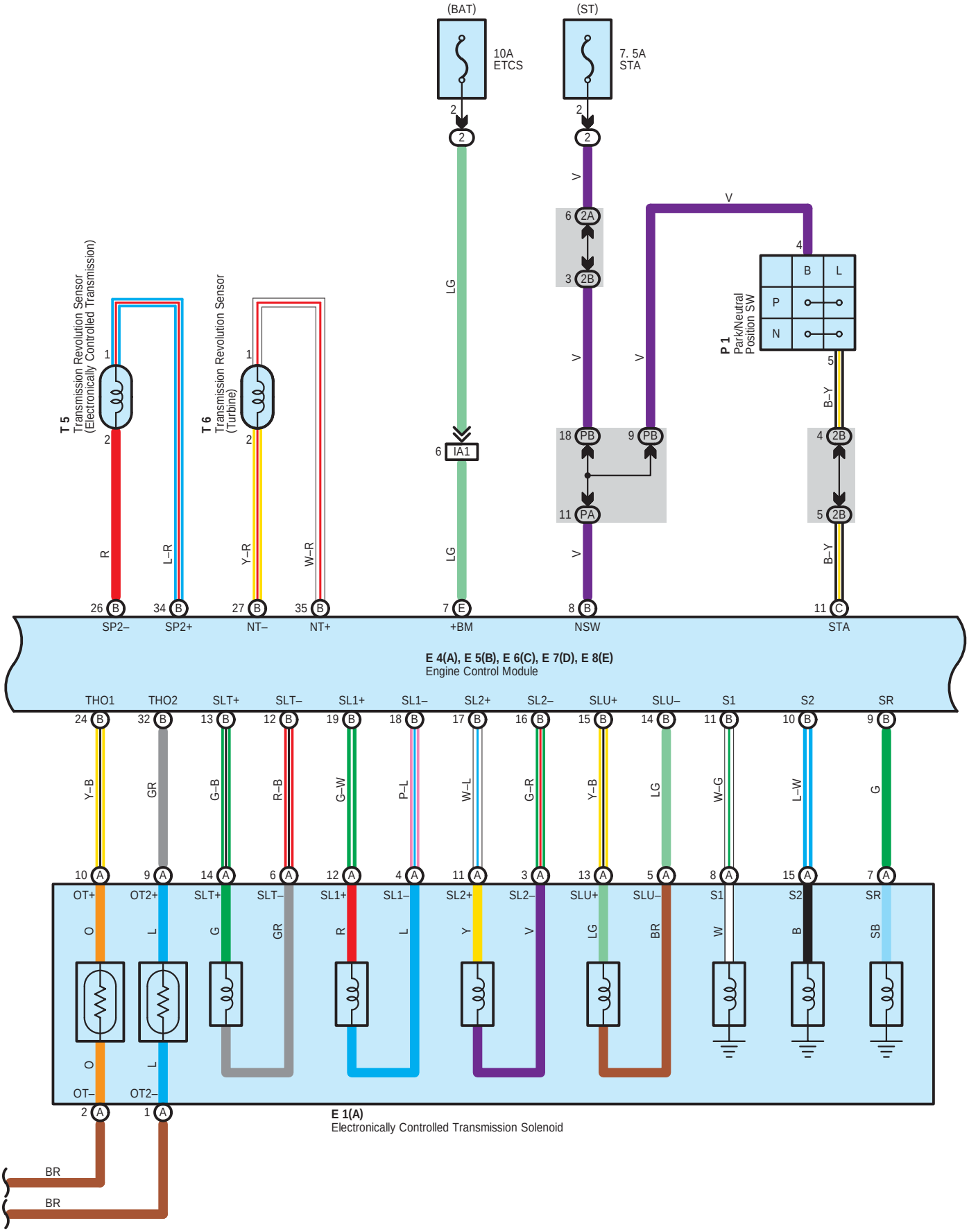
(BAT)
10A
ETCS
(ST)
7. 5A
STA
T 5
Transmission Revolution Sensor
(Electronically Controlled Transmission)
T 6
Transmission Revolution Sensor
(Turbine)
P 1
Park/Neutral
Position SW
B
L
P
N
R
L–R
Y–R
W–R
LG
V
B–Y
SP2–
SP2+
NT–
NT+
+BM
NSW
STA
IA1
PB
PA
2A
2B
E 4(A), E 5(B), E 6(C), E 7(D), E 8(E)
Engine Control Module
THO1
THO2
SLT+
SLT–
SL1+
SL1–
SL2+
SL2–
SLU+
SLU–
S1
S2
SR
Y–B
GR
G–B
R–B
G–W
P–L
W–L
G–R
LG
W–G
L–W
G
OT+
OT2+
SLT+
SLT–
SL1+
SL1–
SL2+
SL2–
SLU+
SLU–
S1
S2
SR
O
L
G
GR
R
L
Y
V
LG
BR
W
B
SB
OT–
OT2–
BR
BR
E 1(A)
Electronically Controlled Transmission Solenoid

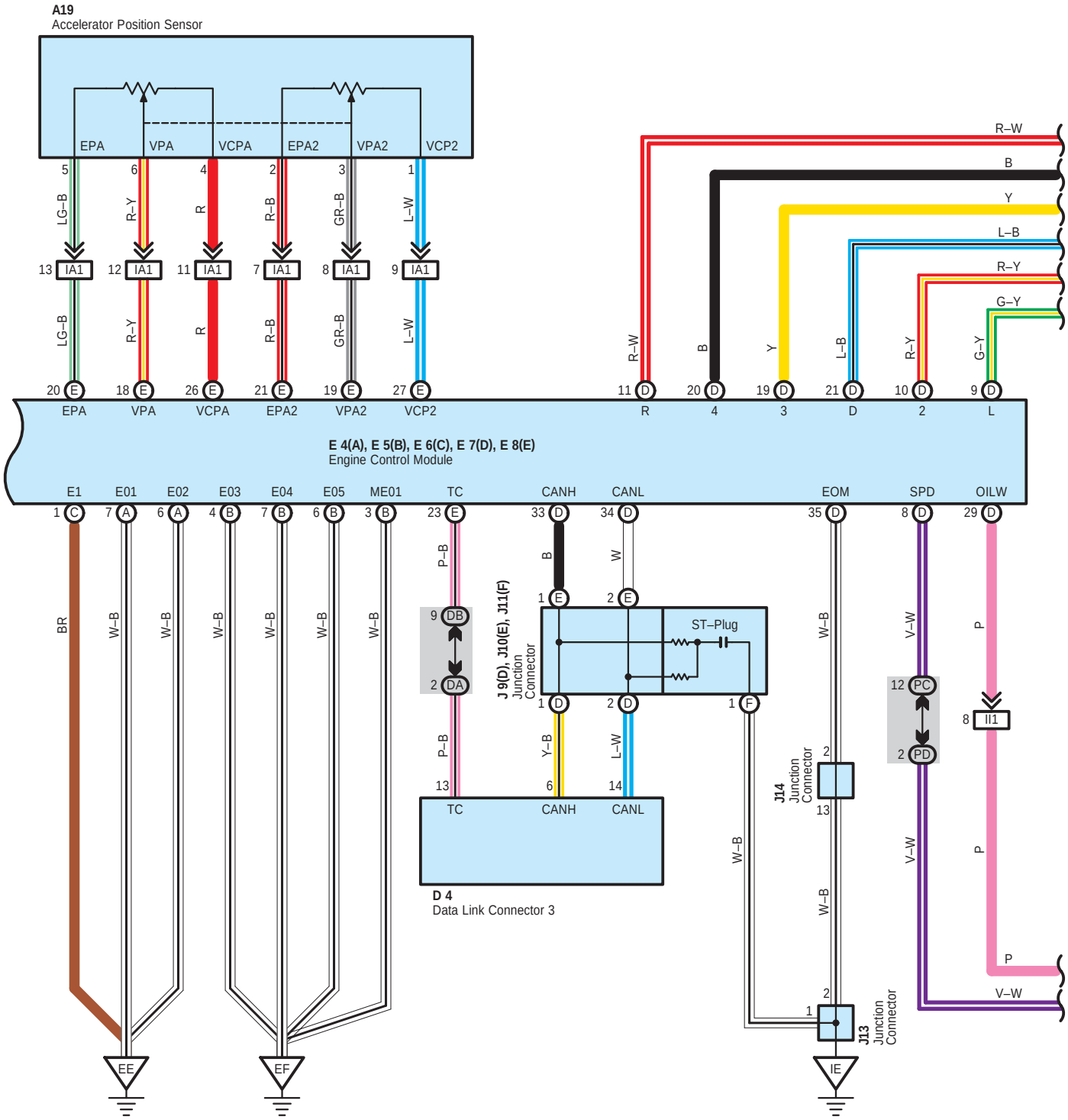
A19
Accelerator Position Sensor
EPA
VPA
VCPA
EPA2
VPA2
VCP2
LG–B
R–Y
R
R–B
GR–B
L–W
IA1
R–W
B
Y
L–B
R–Y
G–Y
E 4(A), E 5(B), E 6(C), E 7(D), E 8(E)
Engine Control Module
E1
E01
E02
E03
E04
E05
ME01
TC
CANH
CANL
EOM
SPD
OILW
BR
W–B
P–B
Y–B
L–W
V–W
P
ST–Plug
J 9(D), J10(E), J11(F)
Junction Connector
J14
Junction Connector
J13
Junction Connector
D 4
Data Link Connector 3
EE
EF
IE

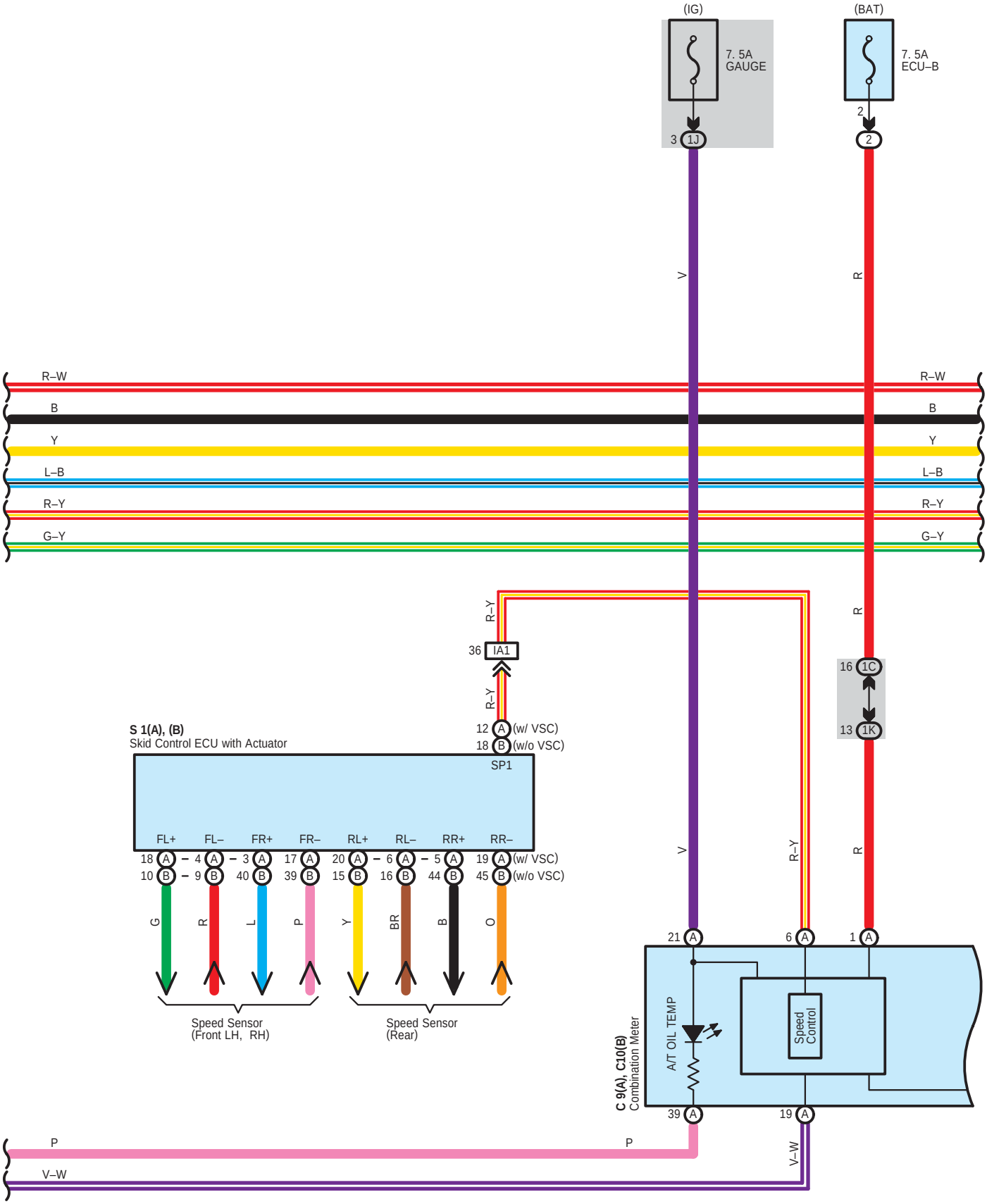
(IG)
7. 5A
GAUGE
3 1J
(BAT)
7. 5A
ECU–B
2
2
V
R
R–W
B
Y
L–B
R–Y
G–Y
R–W
B
Y
L–B
R–Y
G–Y
R–Y
36 IA1
R–Y
12 A (w/ VSC)
18 B (w/o VSC)
SP1
S 1(A), (B)
Skid Control ECU with Actuator
FL+ FL– FR+ FR– RL+ RL– RR+ RR–
18 A – 4 A – 3 A 17 A 20 A – 6 A – 5 A 19 A (w/ VSC)
10 B – 9 B 40 B 39 B 15 B 16 B 44 B 45 B (w/o VSC)
G
R
L
P
Y
BR
B
O
Speed Sensor
(Front LH, RH)
Speed Sensor
(Rear)
R
16 1C
13 1K
R
V
R–Y
R
21 A
6 A
1 A
C 9(A), C10(B)
Combination Meter
A/T OIL TEMP
Speed
Control
39 A
19 A
P
P
V–W
V–W

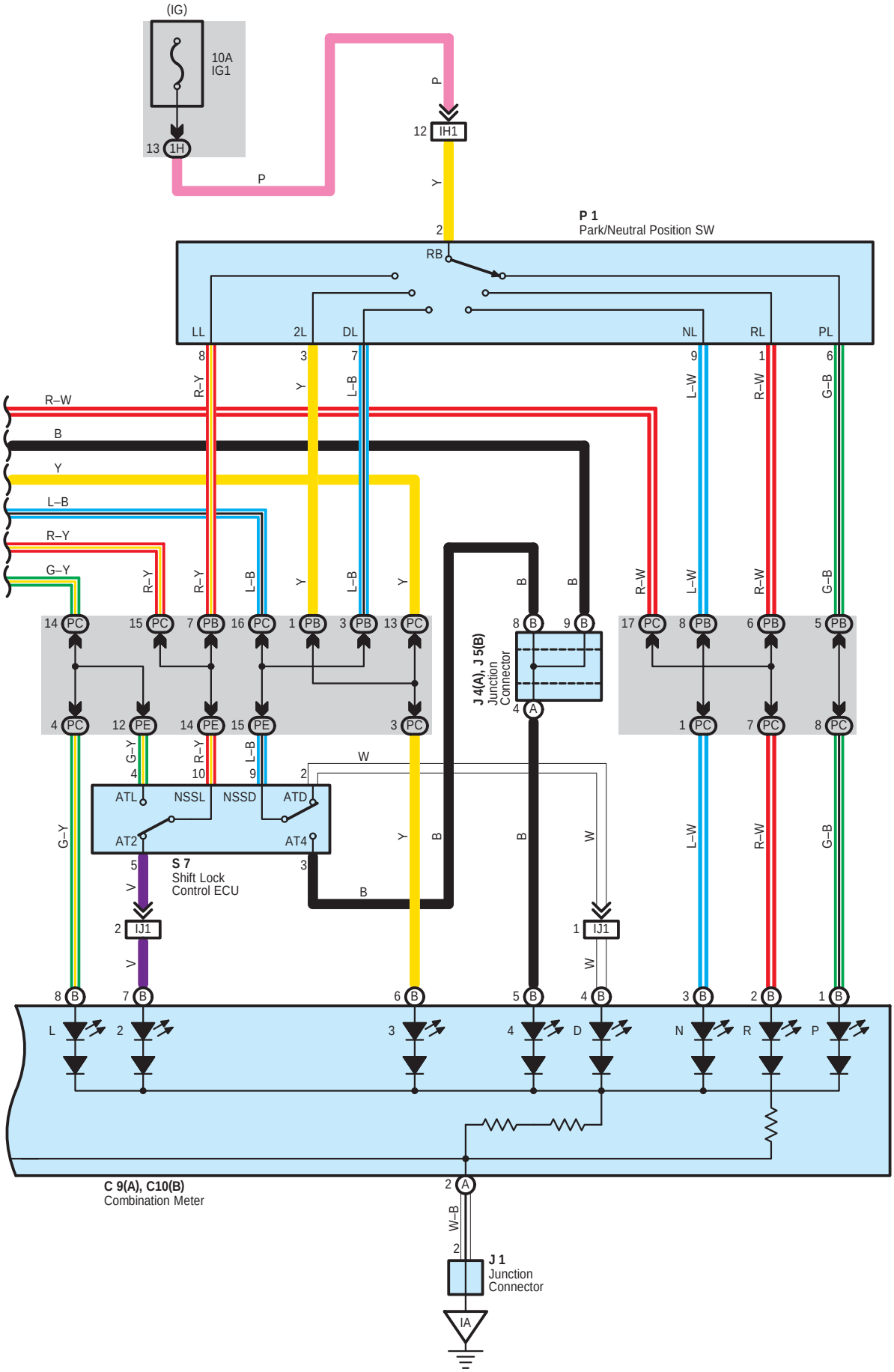
(IG)
10A
IG1
13 1H
P
12 IH1
P
Y
2
P 1
Park/Neutral Position SW
RB
LL
2L
DL
NL
RL
PL
8
3
7
9
1
6
R–Y
Y
L–B
L–W
R–W
G–B
R–W
B
Y
L–B
R–Y
G–Y
14 PC
15 PC
7 PB
16 PC
1 PB
3 PB
13 PC
8 B
9 B
17 PC
8 PB
6 PB
5 PB
J 4(A), J 5(B)
Junction
Connector
4 A
4 PC
12 PE
14 PE
15 PE
3 PC
1 PC
7 PC
8 PC
G–Y
R–Y
L–B
W
4
10
9
2
ATL
NSSL
NSSD
ATD
AT2
AT4
5
3
S 7
Shift Lock
Control ECU
V
2 IJ1
1 IJ1
W
8 B
7 B
6 B
5 B
4 B
3 B
2 B
1 B
L
2
3
4
D
N
R
P
C 9(A), C10(B)
Combination Meter
2 A
W–B
2
J 1
Junction
Connector
IA

System Outline

Previous automatic transmissions have selected each gear shift using mechanically controlled throttle hydraulic pressure, governor hydraulic pressure and lock–up hydraulic pressure. The electronically controlled transmission, however, electrically controls the line pressure, throttle pressure, lock–up pressure and accumulator pressure etc. through the solenoid valve. The electronically controlled transmission is a system which precisely controls gear shift timing and lock–up timing in response to the vehicle's driving conditions and the engine condition detected by various sensors. It makes smooth driving possible by shift selection for each gear which is the most appropriate to the driving conditions at that time, and by preventing downing, squat and gear shift shock when starting off.

1. Gear Shift Operation

When driving, the engine warm up condition is input as a signal to TERMINAL THW of the engine control module from the engine coolant temp. sensor and the vehicle speed signal from vehicle speed sensor is input to TERMINAL SP2+ of the engine control module. At the same time, the throttle valve opening signal from the throttle position sensor is input to TERMINALS VTA1 and VTA2 of the engine control module as throttle angle signal.
Based on these signals, the engine control module selects the best shift position for the driving conditions and sends current to the electronically controlled transmission solenoid.

2. Line Hydraulic Pressure Control

The engine control module adjusts the line hydraulic pressure to the optimal level by controlling TERMINAL SLT+ of the module according to the engine torque data. This realizes the smooth gear shifting.

3. High Response Gear Shifting Control

The engine control module performs the high response engine torque up control to control the ignition–timing lag as well as opening the electronic throttle when shifting down. By doing this, the gear shifting is performed in a short period of time. Moreover, the engine control module uses the orifice switching control, which optimizes the speed of applying and reducing the hydraulic pressure. And it realizes the fine shifting condition by applying and reducing hydraulic pressure slowly when the gear shifting shock is important and quickly when the high response is required.

4. Clutch Hydraulic Pressure Control

The engine control module controls the clutch operation in the optimal timing and with the best hydraulic pressure according to the engine torque data and the number of the clutch revolution

5. Lock–Up and Flexible Lock–Up Control

The engine control module carries out the lock–up control by controlling the TERMINAL SLU+ of the module according to the shift position, vehicle speed, throttle opening degree and running conditions. The engine control module also steadily keeps applying the lock–up clutch a delicate slippage to improve the transmission efficiency (Fuel efficiency) of the torque converter.

6. Stop Lamp SW Circuit

If the brake pedal is depressed (Stop lamp SW on) when driving in lock–up condition, a signal is input to TERMINAL STP of the engine control module. The engine control module operates and cuts the current to the solenoid to release lock–up.

7. AI–Shift Control

The engine control module judges whether the road is downslope or upslope by detecting the throttle opening degree or the vehicle's speed. Moreover it can expect the winding roads by detecting the turning condition of the vehicle. The engine control module keeps unnecessary shifting up from the fourth gear from operating and carries out the automatic shifting down to the third gear in order to control the vehicle running according to the road conditions. The engine control module also reads the driver's intention during driving from his (her) accelerating operation and the running conditions of the vehicle. As a result of that, ideal shifting patters for each driver are automatically selected without any switching operations.

○ : Parts Location

Code		See Page	Code		See Page	Code		See Page
A19		44	E7	D	44	J14		45
C9	A	44	E8	E	44	P1		41 (1GR–FE)
C10	B	44	J1		45	S1	A	41 (1GR–FE)
D4		44	J4	A	45		B	41 (1GR–FE)
E1	A	40 (1GR–FE)	J5	B	45	S7		45
E2		40 (1GR–FE)	J9	D	45	S10		45
E4	A	44	J10	E	45	T1		41 (1GR–FE)
E5	B	44	J11	F	45	T5		41 (1GR–FE)
E6	C	44	J13		45	T6		41 (1GR–FE)

ECT and A/T Indicator for 1GR–FE

: Relay Blocks

Code	See Page	Relay Blocks (Relay Block Location)
2	24	Engine Room R/B (Engine Compartment Left)

: Junction Block and Wire Harness Connector

Code	See Page	Junction Block and Wire Harness (Connector Location)
1B	28	Engine Room Main Wire and Driver Side J/B (Lower Finish Panel)
1C		
1H	29	Instrument Panel Wire and Driver Side J/B (Lower Finish Panel)
1I		
1J		
1K		
2A	24	Engine Room J/B (Engine Compartment Left)
2B	24	Engine Wire and Engine Room J/B (Engine Compartment Left)
DA	34	Instrument Panel Wire and Instrument Panel J/B No.1 (Left Kick Panel)
DB		
DC	34	Engine Room Main Wire and Instrument Panel J/B No.1 (Left Kick Panel)
DD		
PA	36	Engine Wire and Instrument Panel J/B No.2 (Right Side of Glove Box)
PB		
PC	36	Instrument Panel Wire and Instrument Panel J/B No.2 (Right Side of Glove Box)
PD		
PE		

: Connector Joining Wire Harness and Wire Harness

Code	See Page	Joining Wire Harness and Wire Harness (Connector Location)
IA1	54	Instrument Panel Wire and Engine Room Main Wire (Left Kick Panel)
IF1	55	Engine Wire and Engine Wire (Behind the Glove Box)
IH1	55	Engine Wire and Instrument Panel Wire (Right Side of Glove Box)
II1	55	Instrument Panel Wire and Instrument Panel Wire (Instrument Panel Brace RH)
IJ1	55	Instrument Panel Wire and Instrument Panel Wire (Right Kick Panel)

: Ground Points

Code	See Page	Ground Points Location
EA	52 (1GR–FE)	Front Right Fender
EB	52 (1GR–FE)	Front Left Fender
EE	52 (1GR–FE)	Rear Side of Right Bank Cylinder Block
EF	52 (1GR–FE)	Rear Side of Left Bank Cylinder Block
IA	54	Left Kick Panel
IC	54	Instrument Panel Brace RH
IE	54	Right Kick Panel

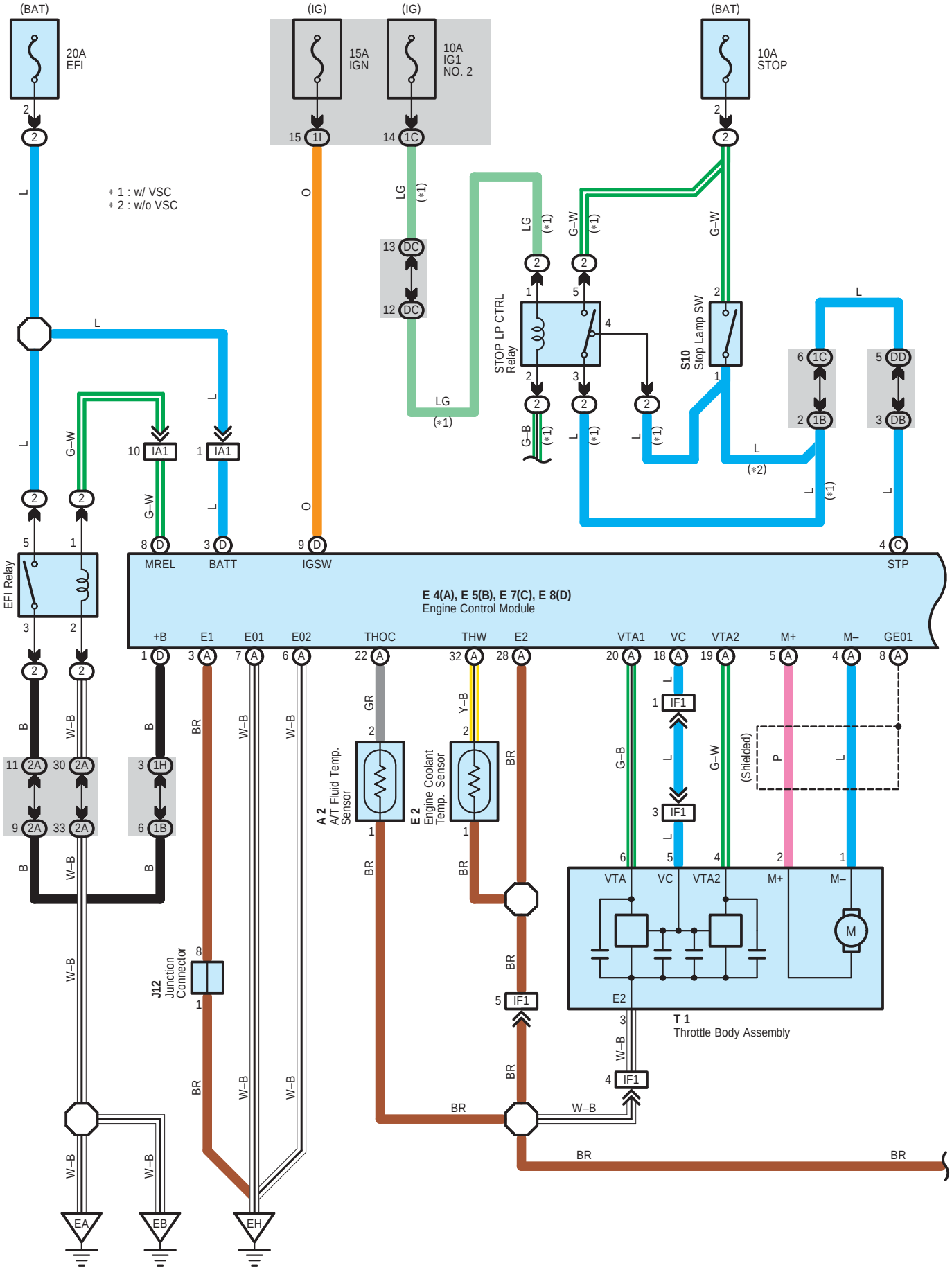
(BAT)
20A
EFI
(IG)
15A
IGN
(IG)
10A
IG1
NO. 2
(BAT)
10A
STOP
* 1 : w/ VSC
* 2 : w/o VSC
STOP LP CTRL
Relay
S10
Stop Lamp SW
EFI Relay
MREL
BATT
IGSW
STP
E 4(A), E 5(B), E 7(C), E 8(D)
Engine Control Module
+B
E1
E01
E02
THOC
THW
E2
VTA1
VC
VTA2
M+
M–
GE01
A 2
A/T Fluid Temp.
Sensor
E 2
Engine Coolant
Temp. Sensor
J12
Junction
Connector
T 1
Throttle Body Assembly
(Shielded)
VTA
VC
VTA2
M+
M–
E2
EA
EB
EH

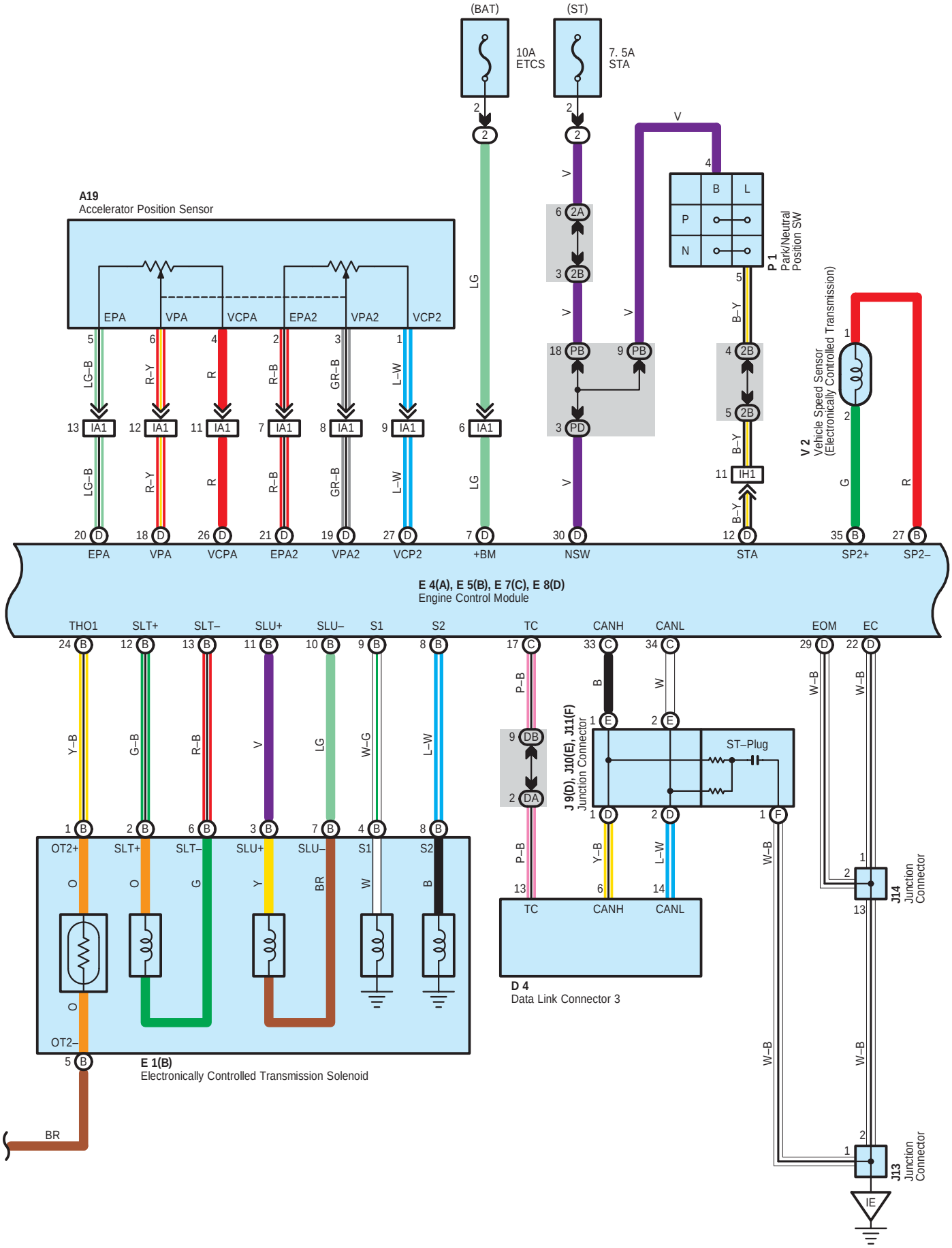
(BAT)
(ST)
10A
ETCS
7. 5A
STA
A19
Accelerator Position Sensor
EPA
VPA
VCPA
EPA2
VPA2
VCP2
P 1
Park/Neutral
Position SW
V 2
Vehicle Speed Sensor
(Electronically Controlled Transmission)
E 4(A), E 5(B), E 7(C), E 8(D)
Engine Control Module
+BM
NSW
STA
SP2+
SP2–
THO1
SLT+
SLT–
SLU+
SLU–
S1
S2
TC
CANH
CANL
EOM
EC
J 9(D), J10(E), J11(F)
Junction Connector
ST–Plug
J14
Junction
Connector
J13
Junction
Connector
D 4
Data Link Connector 3
E 1(B)
Electronically Controlled Transmission Solenoid
OT2+
OT2–
BR
IE

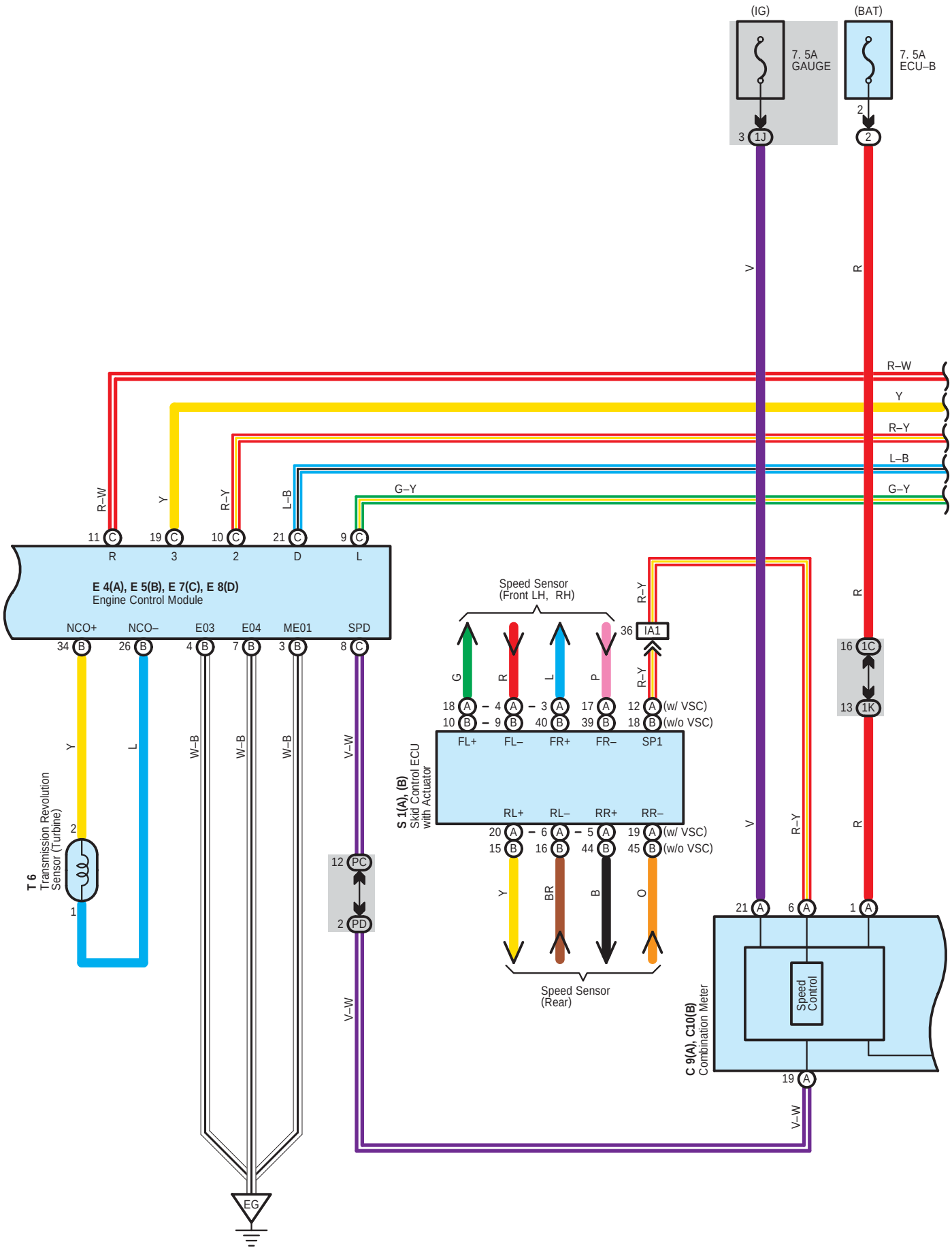
(IG)
(BAT)
7. 5A
GAUGE
7. 5A
ECU–B
3 1J
2
2
V
R
R–W
Y
R–Y
L–B
G–Y
G–Y
R–W
Y
R–Y
L–B
G–Y
11 C
19 C
10 C
21 C
9 C
R
3
2
D
L
E 4(A), E 5(B), E 7(C), E 8(D)
Engine Control Module
NCO+
NCO–
E03
E04
ME01
SPD
34 B
26 B
4 B
7 B
3 B
8 C
Y
L
W–B
W–B
W–B
V–W
T 6
Transmission Revolution
Sensor (Turbine)
2
1
12 PC
2 PD
V–W
Speed Sensor
(Front LH, RH)
R–Y
36 IA1
R–Y
G
R
L
P
18 A
10 B
4 A
9 B
3 A
40 B
17 A
39 B
12 A
18 B
(w/ VSC)
(w/o VSC)
FL+
FL–
FR+
FR–
SP1
S 1(A), (B)
Skid Control ECU
with Actuator
RL+
RL–
RR+
RR–
20 A
15 B
6 A
16 B
5 A
44 B
19 A
45 B
(w/ VSC)
(w/o VSC)
Y
BR
B
O
Speed Sensor
(Rear)
16 1C
13 1K
R
R
V
R–Y
R
21 A
6 A
1 A
Speed
Control
C 9(A), C10(B)
Combination Meter
19 A
V–W

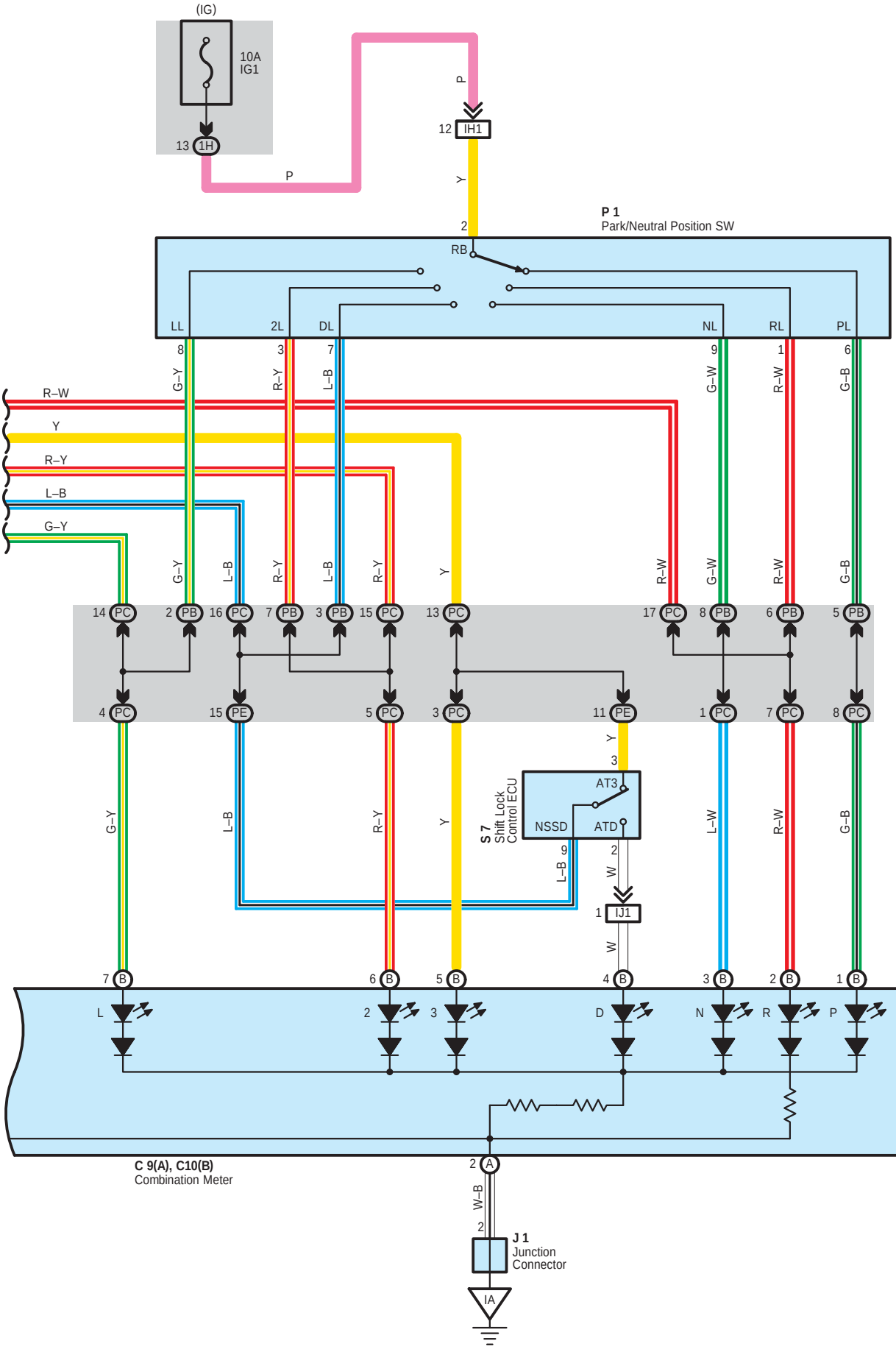
(IG)
10A
IG1
13 1H
P
12 IH1
P
Y
2
P 1
Park/Neutral Position SW
RB
LL
2L
DL
NL
RL
PL
8
3
7
9
1
6
G–Y
R–Y
L–B
G–W
R–W
G–B
R–W
Y
R–Y
L–B
G–Y
14 PC
2 PB
16 PC
7 PB
3 PB
15 PC
13 PC
17 PC
8 PB
6 PB
5 PB
4 PC
15 PE
5 PC
3 PC
11 PE
1 PC
7 PC
8 PC
S 7
Shift Lock
Control ECU
AT3
NSSD
ATD
9
2
1 IJ1
7 B
6 B
5 B
4 B
3 B
2 B
1 B
L
2
3
D
N
R
P
C 9(A), C10(B)
Combination Meter
2 A
W–B
2
J 1
Junction
Connector
IA

ECT and A/T Indicator for 2TR–FE

System Outline

Previous automatic transaxle have selected each gear shift using mechanically controlled throttle hydraulic pressure, governor hydraulic pressure and lock–up hydraulic pressure. The electronically controlled transmission, however, controls the line pressure and lock–up pressure etc. electrically, through the solenoid valve. The engine control module controls each solenoid valve based on the input signals from each sensor, which makes smooth driving possible by shift selection for each gear that is most appropriate to the driving conditions at that time.

1. Gear Shift Operation

During driving, the engine control module selects the shift for each gear which is most appropriate to the driving conditions, based on input signals from the engine coolant temp. sensor to TERMINAL THW of the engine control module, and also the input signals to TERMINAL SPD of the engine control module from the vehicle speed sensor devoted to the electronically controlled transmission. Current is then output to the electronically controlled transmission solenoid. When shifting to 1st speed, the current flows from TERMINAL S1 of the engine control module to TERMINAL (B) 4 of the solenoid to GROUND, and from TERMINAL S2 of the engine control module to TERMINAL 8 of the electronically controlled transmission solenoid to GROUND, and continuity to the No.1 and No.2 solenoid causes the shift.
For 2nd speed, the current flows from TERMINAL S1 of the engine control module to TERMINAL (B) 4 of the solenoid to GROUND, and from TERMINAL S2 of the engine control module to TERMINAL (B) 8 of the solenoid to GROUND, and continuity to solenoid No.1 and No.2 causes the shift.
For 3rd speed, there is no continuity No.1 solenoid, only to No.2, causing the shift.
Shifting into 4th speed (Overdrive) takes place when there is no continuity to both No.1 and No.2 solenoid.

2. Stop Lamp SW Circuit

If the brake pedal is depressed (Stop lamp SW on) when driving in lock–up condition, a signal is input to TERMINAL STP of the engine control module, the engine control module operates and continuity to the lock–up solenoid is cut.

3. AI–Shift Control

The engine control module judges whether the road is downslope or upslope by detecting the throttle opening degree or the vehicle's speed. Moreover it can expect the winding roads by detecting the turning condition of the vehicle. The engine control module keeps unnecessary shifting up from the fourth gear from operating and carries out the automatic shifting down to the third gear in order to control the vehicle running according to the road conditions. The engine control module also reads the driver's intention during driving from his (her) accelerating operation and the running conditions of the vehicle. As a result of that, ideal shifting patters for each driver are automatically selected without any switching operations.

○ : Parts Location

Code	See Page	Code	See Page	Code	See Page
A2	42 (2TR–FE)	E7 C	44	P1	43 (2TR–FE)
A19	44	E8 D	44	S1 A	43 (2TR–FE)
C9 A	44	J1	45	S1 B	43 (2TR–FE)
C10 B	44	J9 D	45	S7	45
D4	44	J10 E	45	S10	45
E1 B	42 (2TR–FE)	J11 F	45	T1	43 (2TR–FE)
E2	42 (2TR–FE)	J12	45	T6	43 (2TR–FE)
E4 A	44	J13	45	V2	43 (2TR–FE)
E5 B	44	J14	45		

▭ : Relay Blocks

Code	See Page	Relay Blocks (Relay Block Location)
2	24	Engine Room R/B (Engine Compartment Left)

: **Junction Block and Wire Harness Connector**

Code	See Page	Junction Block and Wire Harness (Connector Location)
1B	28	Engine Room Main Wire and Driver Side J/B (Lower Finish Panel)
1C		
1H	29	Instrument Panel Wire and Driver Side J/B (Lower Finish Panel)
1I		
1J		
1K		
2A	24	Engine Room J/B (Engine Compartment Left)
2B	24	Engine Wire and Engine Room J/B (Engine Compartment Left)
DA	34	Instrument Panel Wire and Instrument Panel J/B No.1 (Left Kick Panel)
DB		
DC	34	Engine Room Main Wire and Instrument Panel J/B No.1 (Left Kick Panel)
DD		
PB	36	Engine Wire and Instrument Panel J/B No.2 (Right Side of Glove Box)
PC	36	Instrument Panel Wire and Instrument Panel J/B No.2 (Right Side of Glove Box)
PD		
PE		

: **Connector Joining Wire Harness and Wire Harness**

Code	See Page	Joining Wire Harness and Wire Harness (Connector Location)
IA1	54	Instrument Panel Wire and Engine Room Main Wire (Left Kick Panel)
IF1	55	Engine Wire and Engine Wire (Behind the Glove Box)
IH1	55	Engine Wire and Instrument Panel Wire (Right Side of Glove Box)
IJ1	55	Instrument Panel Wire and Instrument Panel Wire (Right Kick Panel)

: **Ground Points**

Code	See Page	Ground Points Location
EA	53 (2TR–FE)	Front Right Fender
EB	53 (2TR–FE)	Front Left Fender
EG	53 (2TR–FE)	Rear Side of Cylinder Block
EH		
IA	54	Left Kick Panel
IE	54	Right Kick Panel

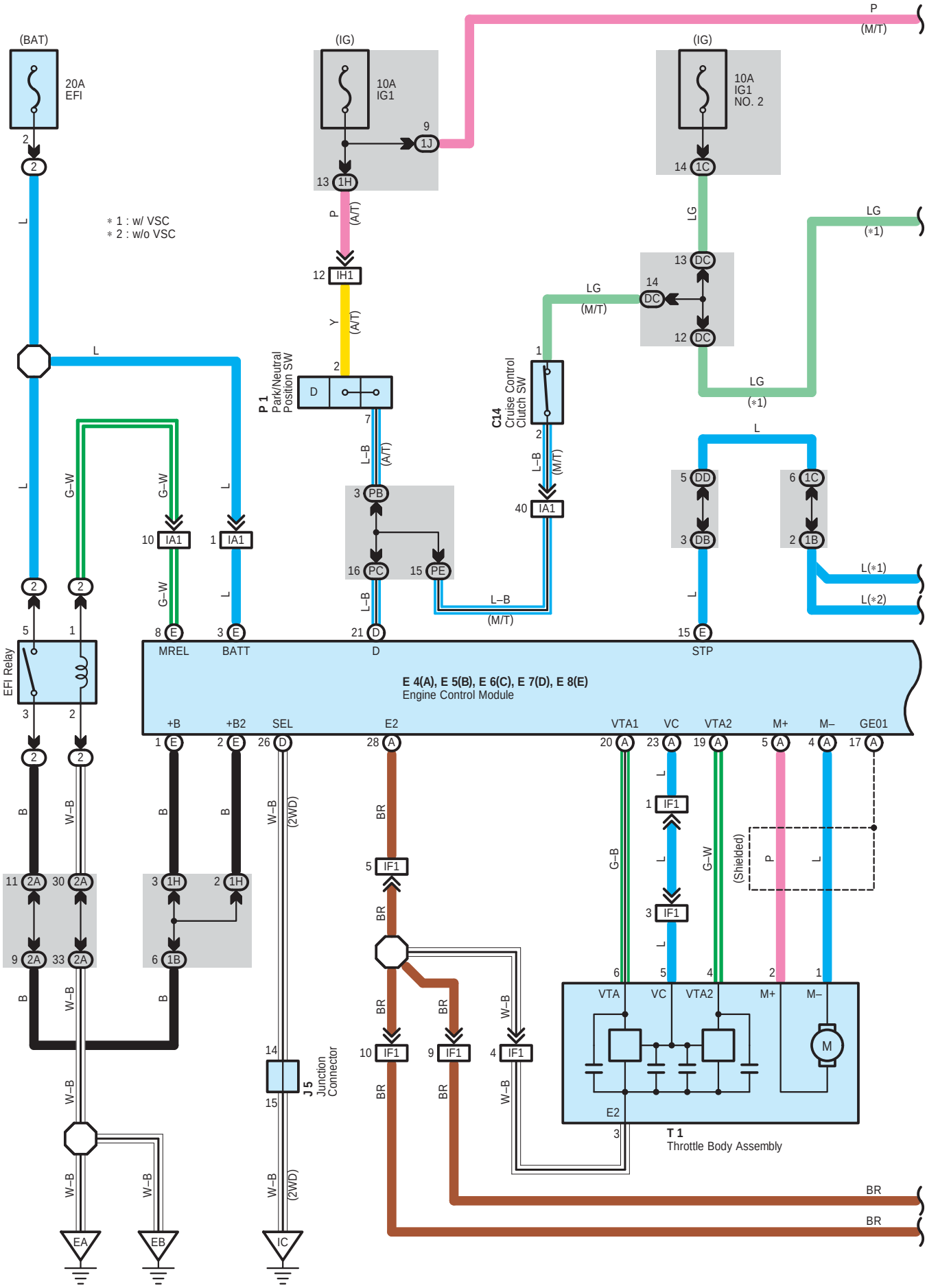
(BAT)
20A
EFI
(IG)
10A
IG1
(IG)
10A
IG1
NO. 2
P
(M/T)
* 1 : w/ VSC
* 2 : w/o VSC
P 1
Park/Neutral
Position SW
C14
Cruise Control
Clutch SW
LG
(*1)
LG
(M/T)
L(*1)
L(*2)
EFI Relay
MREL
BATT
D
STP
E 4(A), E 5(B), E 6(C), E 7(D), E 8(E)
Engine Control Module
+B
+B2
SEL
E2
VTA1
VC
VTA2
M+
M–
GE01
J5
Junction
Connector
(2WD)
T 1
Throttle Body Assembly
VTA
(Shielded)
EA
EB
IC
L–B
(A/T)
(M/T)
G–W
W–B
BR

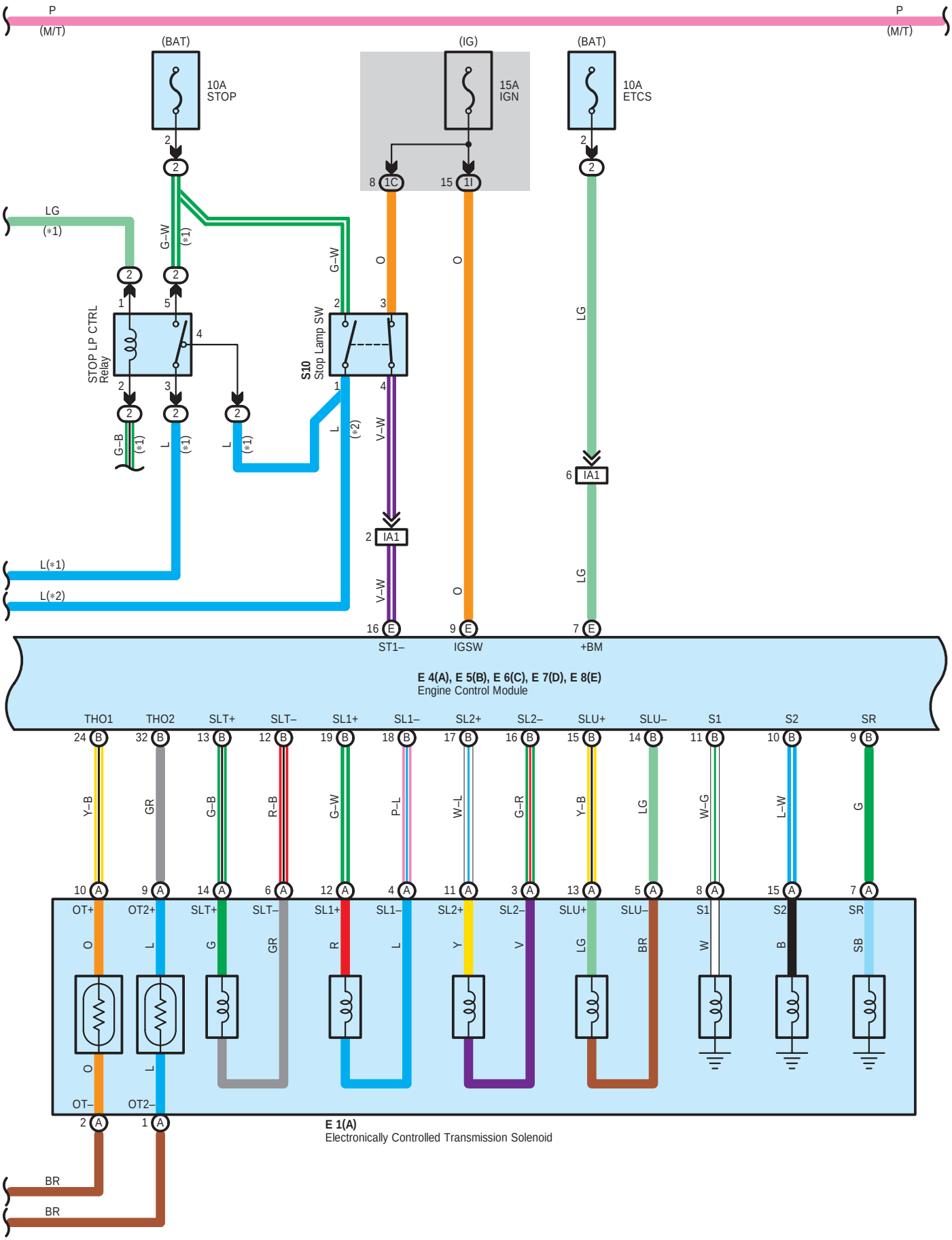
P
(M/T)
P
(M/T)
(BAT)
10A
STOP
(IG)
15A
IGN
(BAT)
10A
ETCS
LG
(*1)
G–W
(*1)
G–W
O
O
LG
STOP LP CTRL
Relay
S10
Stop Lamp SW
G–B
(*1)
L
(*1)
L
(*1)
L
(*2)
V–W
IA1
V–W
O
LG
IA1
LG
L(*1)
L(*2)
ST1–
IGSW
+BM
E 4(A), E 5(B), E 6(C), E 7(D), E 8(E)
Engine Control Module
THO1
THO2
SLT+
SLT–
SL1+
SL1–
SL2+
SL2–
SLU+
SLU–
S1
S2
SR
Y–B
GR
G–B
R–B
G–W
P–L
W–L
G–R
Y–B
LG
W–G
L–W
G
OT+
OT2+
SLT+
SLT–
SL1+
SL1–
SL2+
SL2–
SLU+
SLU–
S1
S2
SR
O
L
G
GR
R
L
Y
V
LG
BR
W
B
SB
O
L
OT–
OT2–
BR
BR
E 1(A)
Electronically Controlled Transmission Solenoid

P (M/T) — P (M/T)

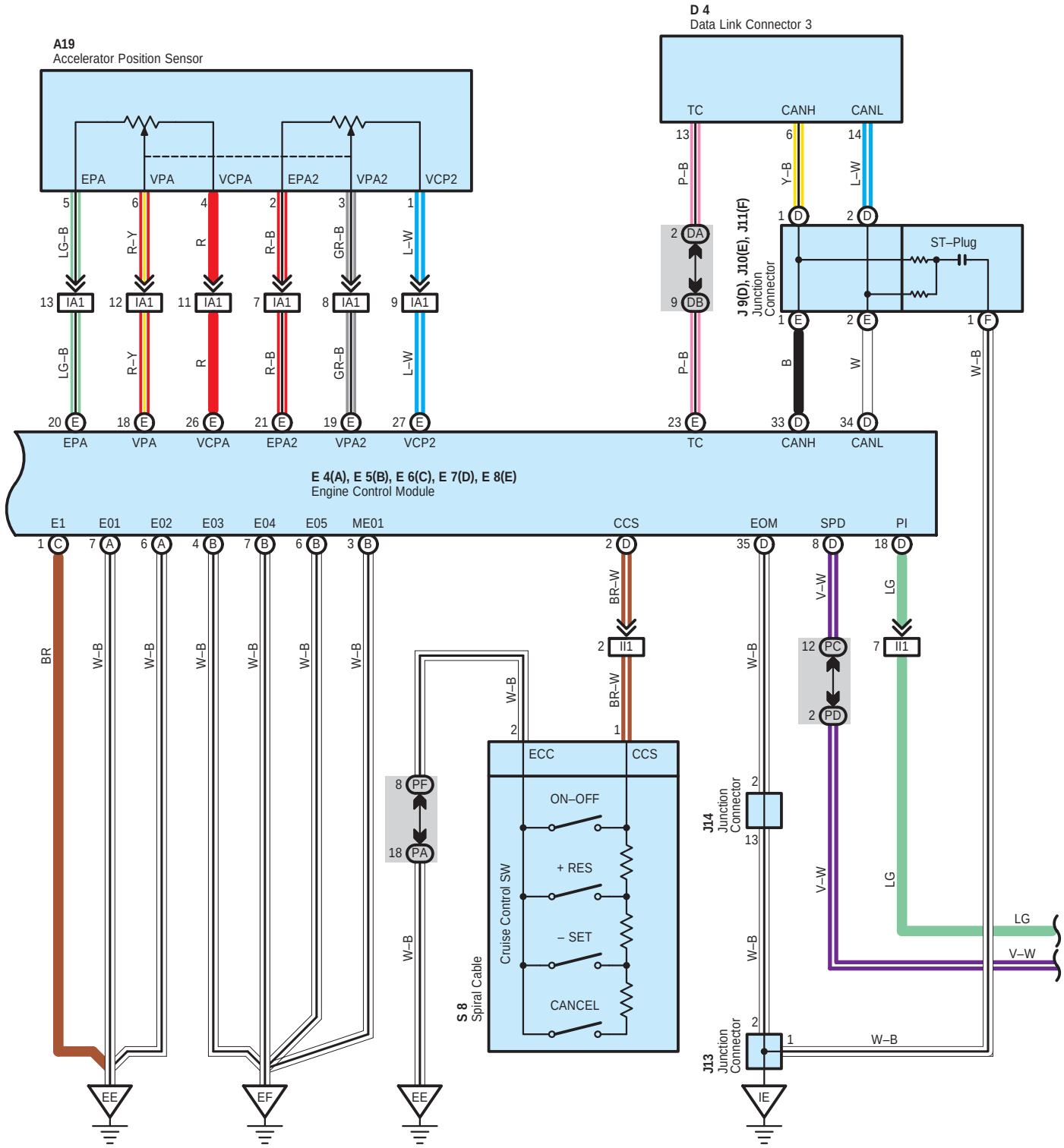
A19
Accelerator Position Sensor
EPA
VPA
VCPA
EPA2
VPA2
VCP2
D 4
Data Link Connector 3
TC
CANH
CANL
J 9(D), J10(E), J11(F)
Junction Connector
ST–Plug
E 4(A), E 5(B), E 6(C), E 7(D), E 8(E)
Engine Control Module
E1
E01
E02
E03
E04
E05
ME01
CCS
EOM
SPD
PI
ECC
CCS
ON–OFF
+ RES
– SET
CANCEL
Cruise Control SW
S 8
Spiral Cable
J14
Junction Connector
J13
Junction Connector
EE
EF
IE

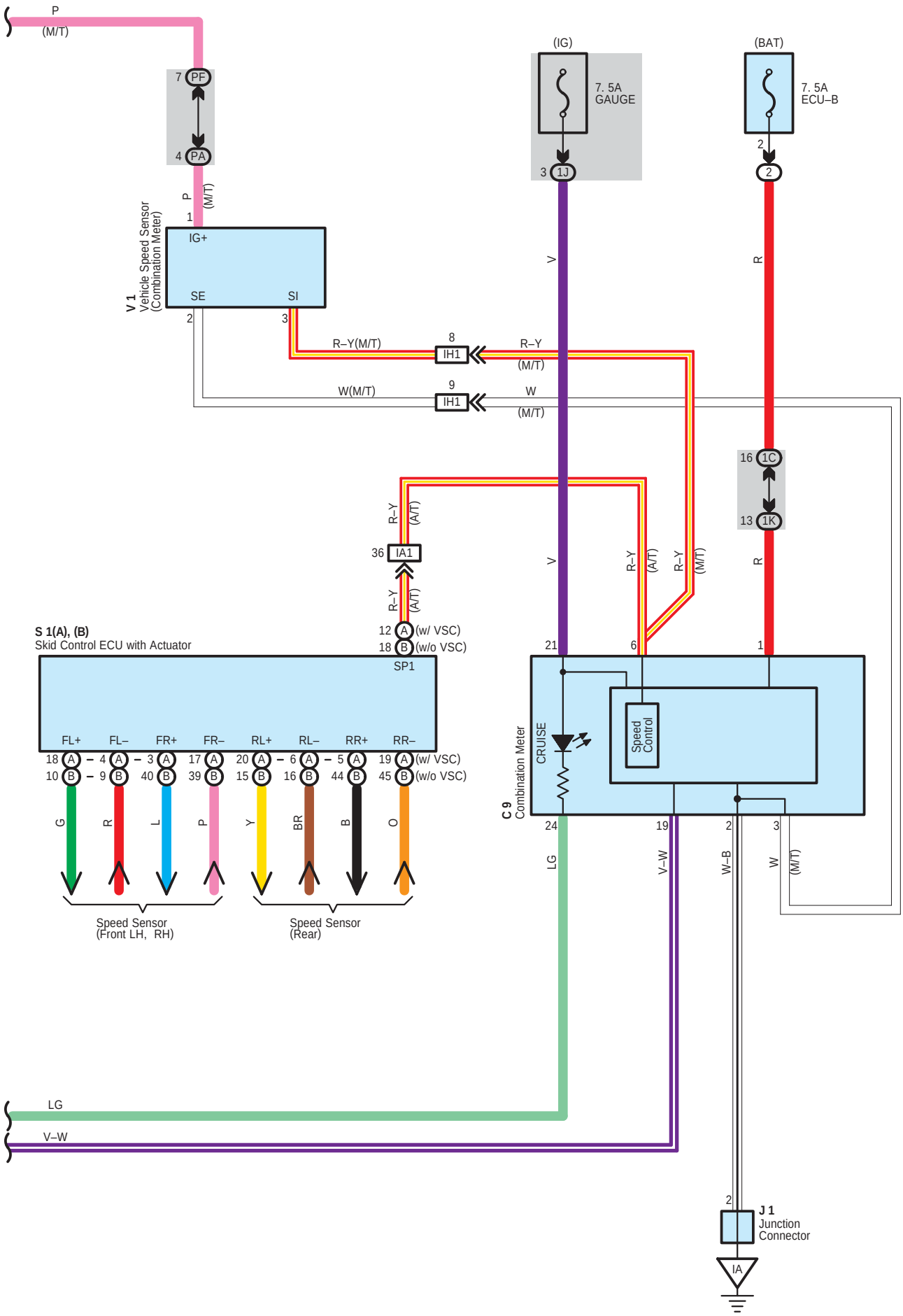
P
(M/T)
7 PF
4 PA
P
(M/T)
1
IG+
SE
SI
2
3
V 1
Vehicle Speed Sensor
(Combination Meter)
(IG)
7. 5A
GAUGE
3 1J
V
(BAT)
7. 5A
ECU–B
2
2
R
R–Y(M/T)
8
IH1
R–Y
(M/T)
W(M/T)
9
IH1
W
(M/T)
16 1C
13 1K
R
R–Y
(A/T)
36 IA1
R–Y
(A/T)
12 A (w/ VSC)
18 B (w/o VSC)
SP1
S 1(A), (B)
Skid Control ECU with Actuator
FL+ FL– FR+ FR– RL+ RL– RR+ RR–
18 A – 4 A – 3 A 17 A 20 A – 6 A – 5 A 19 A (w/ VSC)
10 B – 9 B 40 B 39 B 15 B 16 B 44 B 45 B (w/o VSC)
G
R
L
P
Y
BR
B
O
Speed Sensor
(Front LH, RH)
Speed Sensor
(Rear)
21
6
1
R–Y
(A/T)
R–Y
(M/T)
C 9
Combination Meter
CRUISE
Speed
Control
24
19
2
3
LG
V–W
W–B
W
(M/T)
LG
V–W
2
J 1
Junction
Connector
IA

System Outline

The cruise control system is a constant vehicle speed controller in which control of the switch on the instrument panel makes it possible to automatically adjust the opening of the engine throttle valve without depressing of the accel pedal.

1. Set Operation

When the ON–OFF SW is turned on, the system starts preparations necessary for the cruise control and turns on the indicator light in the combination meter.

2. Set Speed Control

When the – SET SW is operated with the cruise control main SW turned on during travelling, the constant vehicle speed is controlled.

3. Coast Control

When the – SET SW is kept turned on during cruise control travelling, the engine control module controls the throttle valve to decelerate the vehicle. Every time the – SET SW is turned on instantaneously, the vehicle speed is decelerated approximately 1.6 km/h.

4. Accel Control

When the + RES SW is kept turned on during cruise control travelling, the engine control module controls the throttle valve to accelerate the vehicle. Every time the + RES SW is turned on instantaneously, the vehicle speed is accelerated approximately 1.6 km/h.

5. Resume Control

When the vehicle speed is within the low speed limit (Approximately 40 km/h, 25 mph) if the cruise control is cancelled, use of the + RES SW accelerates the vehicle to the speed level used before canceling the cruise control.

6. Manual Cancel Mechanism

If any of the following signals is input during cruise control travelling, the cruise control is cancelled.

* The stop lamp SW is turned on.
* The CANCEL SW is turned on.
* The ON–OFF SW is turned off.
* Gear is shifted from D position to other positions than D (A/T).
* Clutch pedal depresed (M/T).

7. Auto Cancel Function

If any of the following conditions is encountered, the cruise control is automatically cancelled.

* The stop lamp SW wiring is faulty or short–circuited.
* The vehicle speed signal is faulty.
* The electronically controlled throttle malfunctions.
* The actual vehicle speed becomes –16 km/h slower than the set speed.
* The actual vehicle speed becomes slower than the minimum speed limit.

8. Overdrive Control Function

Overdrive is sometimes cut off on gradients during cruise control driving. When end of climbing gradient is determined by throttle opening degree information after overdrive is canceled, control is reset to overdrive condition after overdrive resetting timer operation. Also, when overdrive is cut off during accelerator resuming control, control is reset to overdrive condition when accelerator resuming control is finished.

○ : Parts Location

Code		See Page	Code		See Page	Code		See Page
A19		44	E7	D	44	J14		45
C9		44	E8	E	44	P1		41 (1GR–FE)
C14		44	J1		45	S1	A	41 (1GR–FE)
D4		44	J5		45		B	41 (1GR–FE)
E1	A	40 (1GR–FE)	J9	D	45	S8		45
E4	A	44	J10	E	45	S10		45
E5	B	44	J11	F	45	T1		41 (1GR–FE)
E6	C	44	J13		45	V1		41 (1GR–FE)

▭ : Relay Blocks

Code	See Page	Relay Blocks (Relay Block Location)
2	24	Engine Room R/B (Engine Compartment Left)

: **Junction Block and Wire Harness Connector**

Code	See Page	Junction Block and Wire Harness (Connector Location)
1B	28	Engine Room Main Wire and Driver Side J/B (Lower Finish Panel)
1C		
1H	29	Instrument Panel Wire and Driver Side J/B (Lower Finish Panel)
1I		
1J		
1K		
2A	24	Engine Room J/B (Engine Compartment Left)
DA	34	Instrument Panel Wire and Instrument Panel J/B No.1 (Left Kick Panel)
DB		
DC	34	Engine Room Main Wire and Instrument Panel J/B No.1 (Left Kick Panel)
DD		
PA	36	Engine Wire and Instrument Panel J/B No.2 (Right Side of Glove Box)
PB		
PC	36	Instrument Panel Wire and Instrument Panel J/B No.2 (Right Side of Glove Box)
PD		
PE		
PF		

: **Connector Joining Wire Harness and Wire Harness**

Code	See Page	Joining Wire Harness and Wire Harness (Connector Location)
IA1	54	Instrument Panel Wire and Engine Room Main Wire (Left Kick Panel)
IF1	55	Engine Wire and Engine Wire (Behind the Glove Box)
IH1	55	Engine Wire and Instrument Panel Wire (Right Side of Glove Box)
II1	55	Instrument Panel Wire and Instrument Panel Wire (Instrument Panel Brace RH)

: **Ground Points**

Code	See Page	Ground Points Location
EA	52 (1GR–FE)	Front Right Fender
EB	52 (1GR–FE)	Front Left Fender
EE	52 (1GR–FE)	Rear Side of Right Bank Cylinder Block
EF	52 (1GR–FE)	Rear Side of Left Bank Cylinder Block
IA	54	Left Kick Panel
IC	54	Instrument Panel Brace RH
IE	54	Right Kick Panel

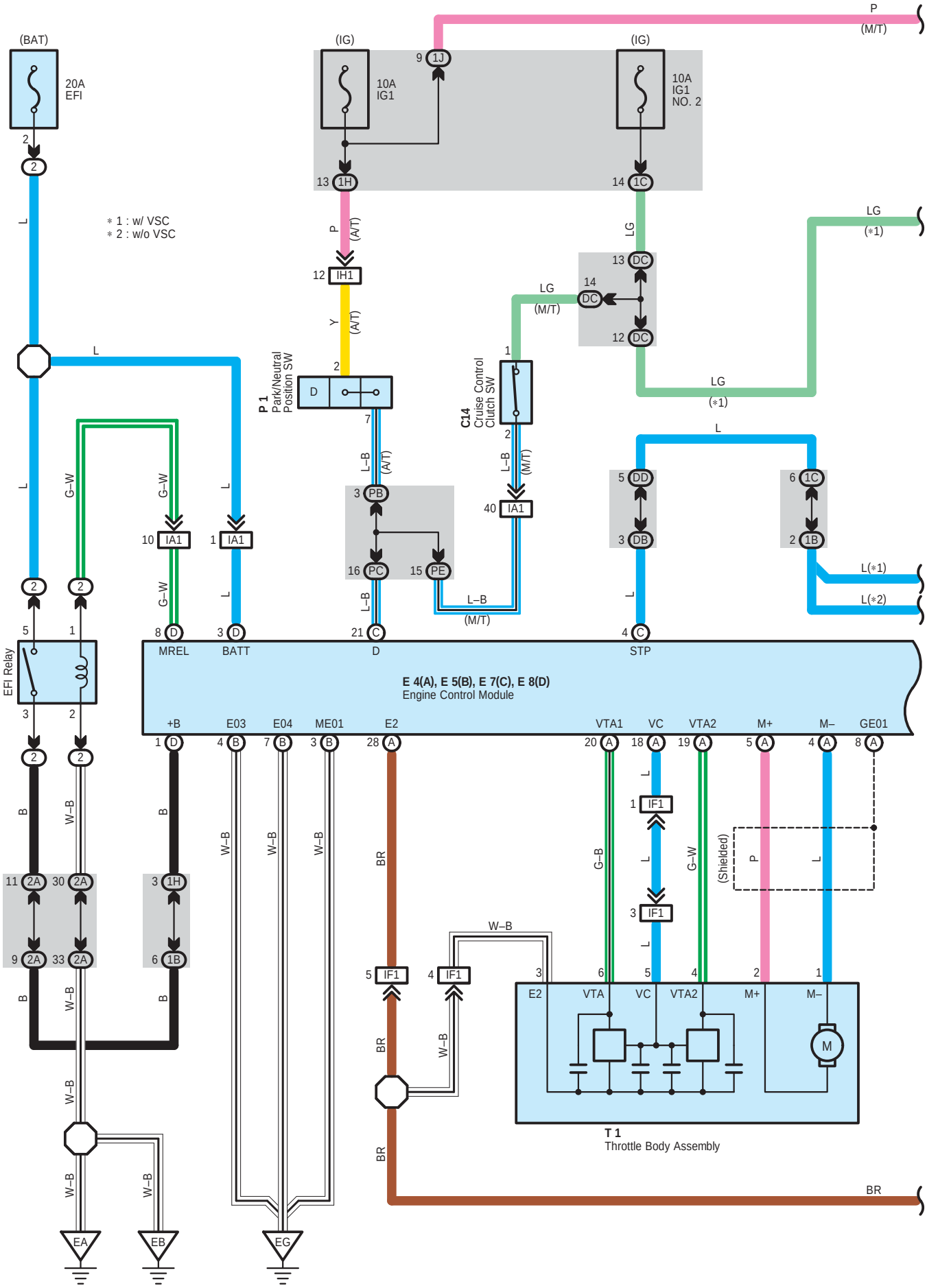
(BAT)
20A
EFI
(IG)
10A
IG1
(IG)
10A
IG1
NO. 2
P
(M/T)
* 1 : w/ VSC
* 2 : w/o VSC
P 1
Park/Neutral
Position SW
C14
Cruise Control
Clutch SW
LG
(*1)
L(*1)
L(*2)
EFI Relay
E 4(A), E 5(B), E 7(C), E 8(D)
Engine Control Module
+B
E03
E04
ME01
E2
VTA1
VC
VTA2
M+
M–
GE01
MREL
BATT
D
STP
T 1
Throttle Body Assembly
E2
VTA
VC
VTA2
M+
M–
(Shielded)
EA
EB
EG

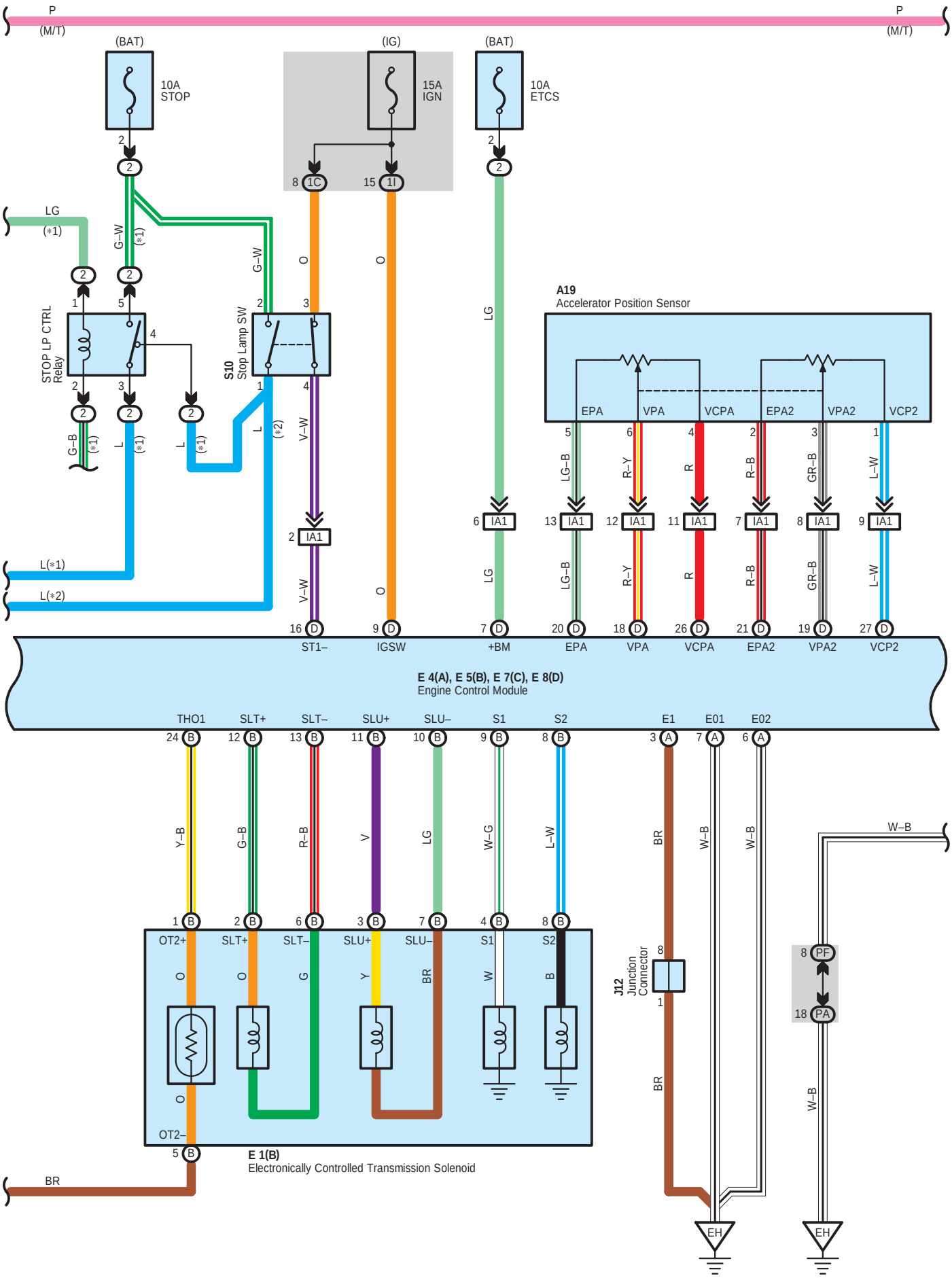
P
(M/T)
P
(M/T)
(BAT)
10A
STOP
(IG)
15A
IGN
(BAT)
10A
ETCS
LG
(*1)
G–W
STOP LP CTRL
Relay
S10
Stop Lamp SW
G–B
L
L(*1)
L(*2)
V–W
O
LG
A19
Accelerator Position Sensor
EPA
VPA
VCPA
EPA2
VPA2
VCP2
LG–B
R–Y
R
R–B
GR–B
L–W
IA1
ST1–
IGSW
+BM
EPA
VPA
VCPA
EPA2
VPA2
VCP2
E 4(A), E 5(B), E 7(C), E 8(D)
Engine Control Module
THO1
SLT+
SLT–
SLU+
SLU–
S1
S2
E1
E01
E02
Y–B
G–B
R–B
V
LG
W–G
L–W
BR
W–B
OT2+
OT2–
G
Y
W
B
J12
Junction
Connector
PF
PA
EH
E 1(B)
Electronically Controlled Transmission Solenoid
BR

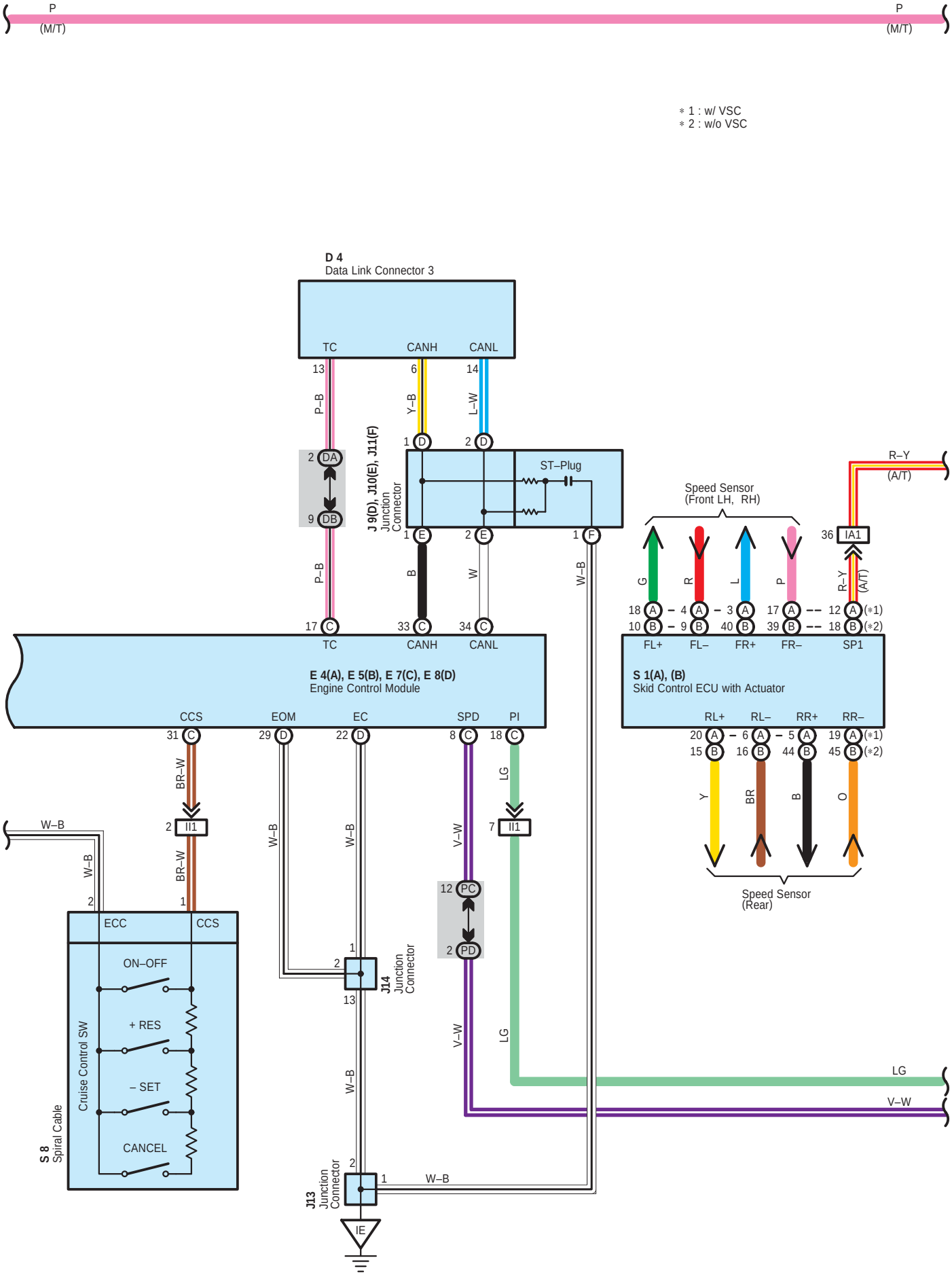
P
(M/T)
P
(M/T)
* 1 : w/ VSC
* 2 : w/o VSC
D 4
Data Link Connector 3
TC
CANH
CANL
13
6
14
P–B
Y–B
L–W
2 DA
9 DB
1 D
2 D
J 9(D), J10(E), J11(F)
Junction Connector
ST–Plug
1 E
2 E
1 F
B
W
W–B
P–B
17 C
33 C
34 C
TC
CANH
CANL
E 4(A), E 5(B), E 7(C), E 8(D)
Engine Control Module
CCS
EOM
EC
SPD
PI
31 C
29 D
22 D
8 C
18 C
BR–W
LG
2 I11
7 I11
W–B
W–B
W–B
V–W
12 PC
2 PD
J14
Junction Connector
1
2
13
W–B
V–W
LG
LG
V–W
2
1
W–B
J13
Junction Connector
IE
S 8
Spiral Cable
Cruise Control SW
ECC
CCS
ON–OFF
+ RES
– SET
CANCEL
Speed Sensor
(Front LH, RH)
G
R
L
P
18 A
10 B
4 A
9 B
3 A
40 B
17 A
39 B
FL+
FL–
FR+
FR–
36 IA1
R–Y
(A/T)
12 A (*1)
18 B (*2)
SP1
R–Y
(A/T)
S 1(A), (B)
Skid Control ECU with Actuator
RL+
RL–
RR+
RR–
20 A
15 B
6 A
16 B
5 A
44 B
19 A (*1)
45 B (*2)
Y
BR
B
O
Speed Sensor
(Rear)

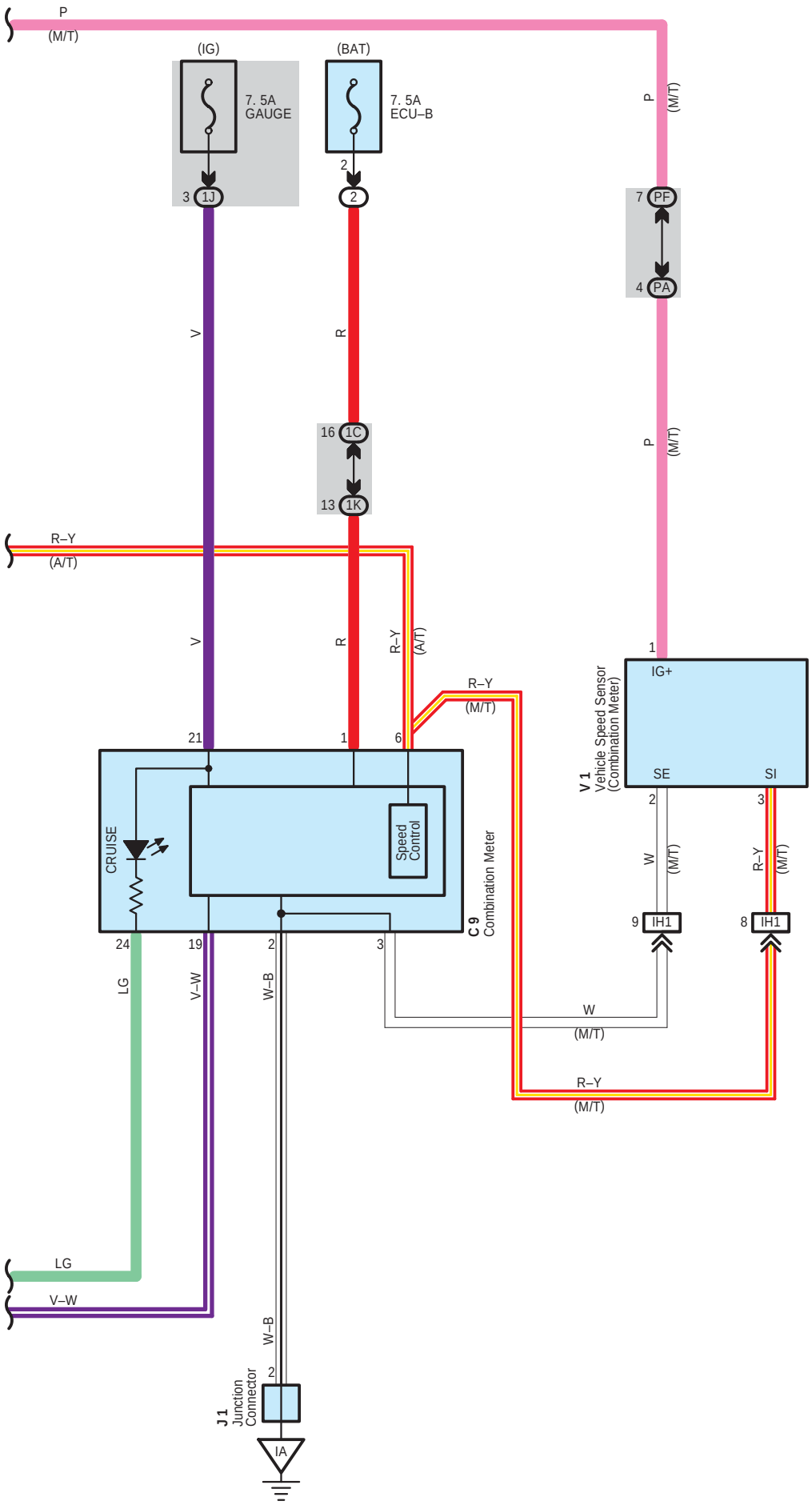
P
(M/T)
(IG)
(BAT)
7. 5A
GAUGE
7. 5A
ECU–B
3 1J
2
2
P
(M/T)
7 PF
4 PA
V
R
16 1C
13 1K
P
(M/T)
R–Y
(A/T)
V
R
R–Y
(A/T)
R–Y
(M/T)
1
IG+
V 1
Vehicle Speed Sensor
(Combination Meter)
SE
SI
2
3
21
1
6
CRUISE
Speed
Control
C 9
Combination Meter
W
(M/T)
R–Y
(M/T)
9 IH1
8 IH1
24
19
2
3
LG
V–W
W–B
W
(M/T)
R–Y
(M/T)
LG
V–W
W–B
2
J 1
Junction
Connector
IA

System Outline

The cruise control system is a constant vehicle speed controller in which control of the switch on the instrument panel makes it possible to automatically adjust the opening of the engine throttle valve without depressing of the accel pedal.

1. Set Operation

When the ON–OFF SW is turned on, the system starts preparations necessary for the cruise control and turns on the indicator light in the combination meter.

2. Set Speed Control

When the – SET SW is operated with the cruise control main SW turned on during travelling, the constant vehicle speed is controlled.

3. Coast Control

When the – SET SW is kept turned on during cruise control travelling, the engine control module controls the throttle valve to decelerate the vehicle. Every time the – SET SW is turned on instantaneously, the vehicle speed is decelerated approximately 1.6 km/h.

4. Accel Control

When the + RES SW is kept turned on during cruise control travelling, the engine control module controls the throttle valve to accelerate the vehicle. Every time the + RES SW is turned on instantaneously, the vehicle speed is accelerated approximately 1.6 km/h.

5. Resume Control

When the vehicle speed is within the low speed limit (Approximately 40 km/h, 25 mph) if the cruise control is cancelled, use of the + RES SW accelerates the vehicle to the speed level used before canceling the cruise control.

6. Manual Cancel Mechanism

If any of the following signals is input during cruise control travelling, the cruise control is cancelled.

- The stop lamp SW is turned on.
- The CANCEL SW is turned on.
- The ON–OFF SW is turned off.
- Gear is shifted from D position to other positions than D (A/T).
- Clutch pedal depresed (M/T).

7. Auto Cancel Function

If any of the following conditions is encountered, the cruise control is automatically cancelled.

- The stop lamp SW wiring is faulty or short–circuited.
- The vehicle speed signal is faulty.
- The electronically controlled throttle malfunctions.
- The actual vehicle speed becomes –16 km/h slower than the set speed.
- The actual vehicle speed becomes slower than the minimum speed limit.

8. Overdrive Control Function

Overdrive is sometimes cut off on gradients during cruise control driving. When end of climbing gradient is determined by throttle opening degree information after overdrive is canceled, control is reset to overdrive condition after overdrive resetting timer operation. Also, when overdrive is cut off during accelerator resuming control, control is reset to overdrive condition when accelerator resuming control is finished.

○ : Parts Location

Code	See Page	Code	See Page	Code	See Page
A19	44	E8 D	44	P1	43 (2TR–FE)
C9	44	J1	45	S1 A	43 (2TR–FE)
C14	44	J9 D	45	S1 B	43 (2TR–FE)
D4	44	J10 E	45	S8	45
E1 B	42 (2TR–FE)	J11 F	45	S10	45
E4 A	44	J12	45	T1	43 (2TR–FE)
E5 B	44	J13	45	V1	43 (2TR–FE)
E7 C	44	J14	45		

▭ : Relay Blocks

Code	See Page	Relay Blocks (Relay Block Location)
2	24	Engine Room R/B (Engine Compartment Left)

: **Junction Block and Wire Harness Connector**

Code	See Page	Junction Block and Wire Harness (Connector Location)
1B	28	Engine Room Main Wire and Driver Side J/B (Lower Finish Panel)
1C		
1H	29	Instrument Panel Wire and Driver Side J/B (Lower Finish Panel)
1I		
1J		
1K		
2A	24	Engine Room J/B (Engine Compartment Left)
DA	34	Instrument Panel Wire and Instrument Panel J/B No.1 (Left Kick Panel)
DB		
DC	34	Engine Room Main Wire and Instrument Panel J/B No.1 (Left Kick Panel)
DD		
PA	36	Engine Wire and Instrument Panel J/B No.2 (Right Side of Glove Box)
PB		
PC	36	Instrument Panel Wire and Instrument Panel J/B No.2 (Right Side of Glove Box)
PD		
PE		
PF		

: **Connector Joining Wire Harness and Wire Harness**

Code	See Page	Joining Wire Harness and Wire Harness (Connector Location)
IA1	54	Instrument Panel Wire and Engine Room Main Wire (Left Kick Panel)
IF1	55	Engine Wire and Engine Wire (Behind the Glove Box)
IH1	55	Engine Wire and Instrument Panel Wire (Right Side of Glove Box)
II1	55	Instrument Panel Wire and Instrument Panel Wire (Instrument Panel Brace RH)

: **Ground Points**

Code	See Page	Ground Points Location
EA	53 (2TR–FE)	Front Right Fender
EB	53 (2TR–FE)	Front Left Fender
EG	53 (2TR–FE)	Rear Side of Cylinder Block
EH		
IA	54	Left Kick Panel
IE	54	Right Kick Panel

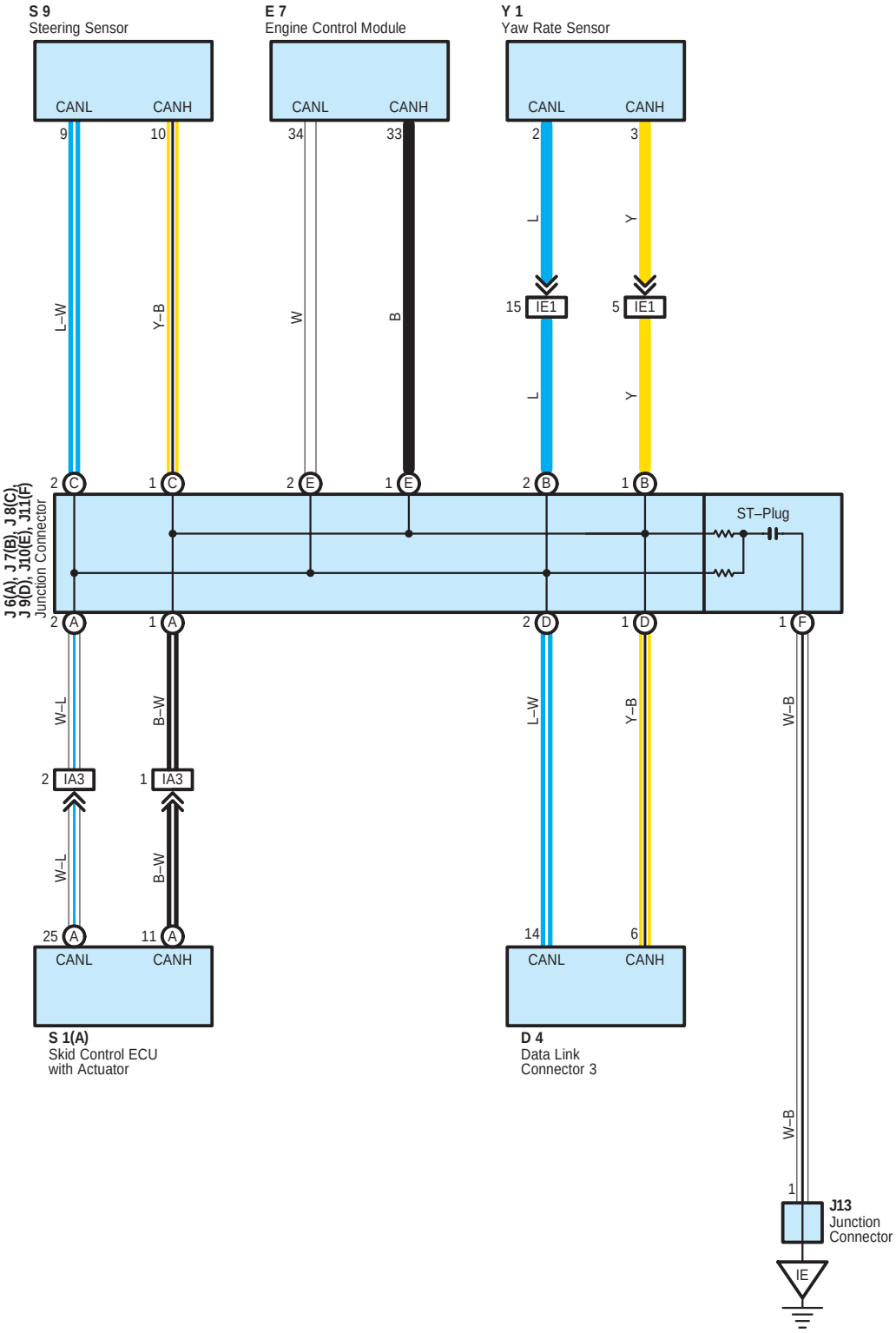
S 9
Steering Sensor
CANL
CANH
9
10
E 7
Engine Control Module
34
33
Y 1
Yaw Rate Sensor
2
3
L–W
Y–B
W
B
L
Y
15
IE1
5
IE1
J 6(A), J 7(B), J 8(C),
J 9(D), J10(E), J11(F)
Junction Connector
2 C
1 C
2 E
1 E
2 B
1 B
ST–Plug
2 A
1 A
2 D
1 D
1 F
W–L
B–W
L–W
Y–B
W–B
2
IA3
1
IA3
25 A
11 A
14
6
S 1(A)
Skid Control ECU
with Actuator
D 4
Data Link
Connector 3
J13
Junction
Connector
IE

System Outline

Multiplex communication system (CAN) uses a serial communication protocol and communicates with a differential voltage. In this network system, TERMINALS CANH and CANL are used for communication between the ECUs and sensors, and excellent data communication speed and communication error detecting facility are provided.

This system is working for the following systems:
* ABS (w/ VSC)
* Auto LSD
* Cruise Control
* Downhill Assist Control
* Electronically Controlled Transmission and A/T Indicator
* Engine Control
* Hill–Start Assist Control
* TRAC
* VSC

○ : Parts Location

Code		See Page	Code		See Page	Code		See Page
D4		44	J9	D	45	S1	A	43 (2TR–FE)
E7		44	J10	E	45	S9		45
J6	A	45	J11	F	45	Y1		47 (*1)
J7	B	45	J13		45			48 (*2)
J8	C	45	S1	A	41 (1GR–FE)			49 (*3)

▭ : Connector Joining Wire Harness and Wire Harness

Code	See Page	Joining Wire Harness and Wire Harness (Connector Location)
IA3	54	Instrument Panel Wire and Engine Room Main Wire (Left Kick Panel)
IE1	54	Instrument Panel Wire and Floor No.2 Wire (Left Kick Panel)

▽ : Ground Points

Code	See Page	Ground Points Location
IE	54	Right Kick Panel

* 1 : Double Cab * 2 : Access Cab * 3 : Regular Cab * 4 : Separate Seat * 5 : Bench Seat

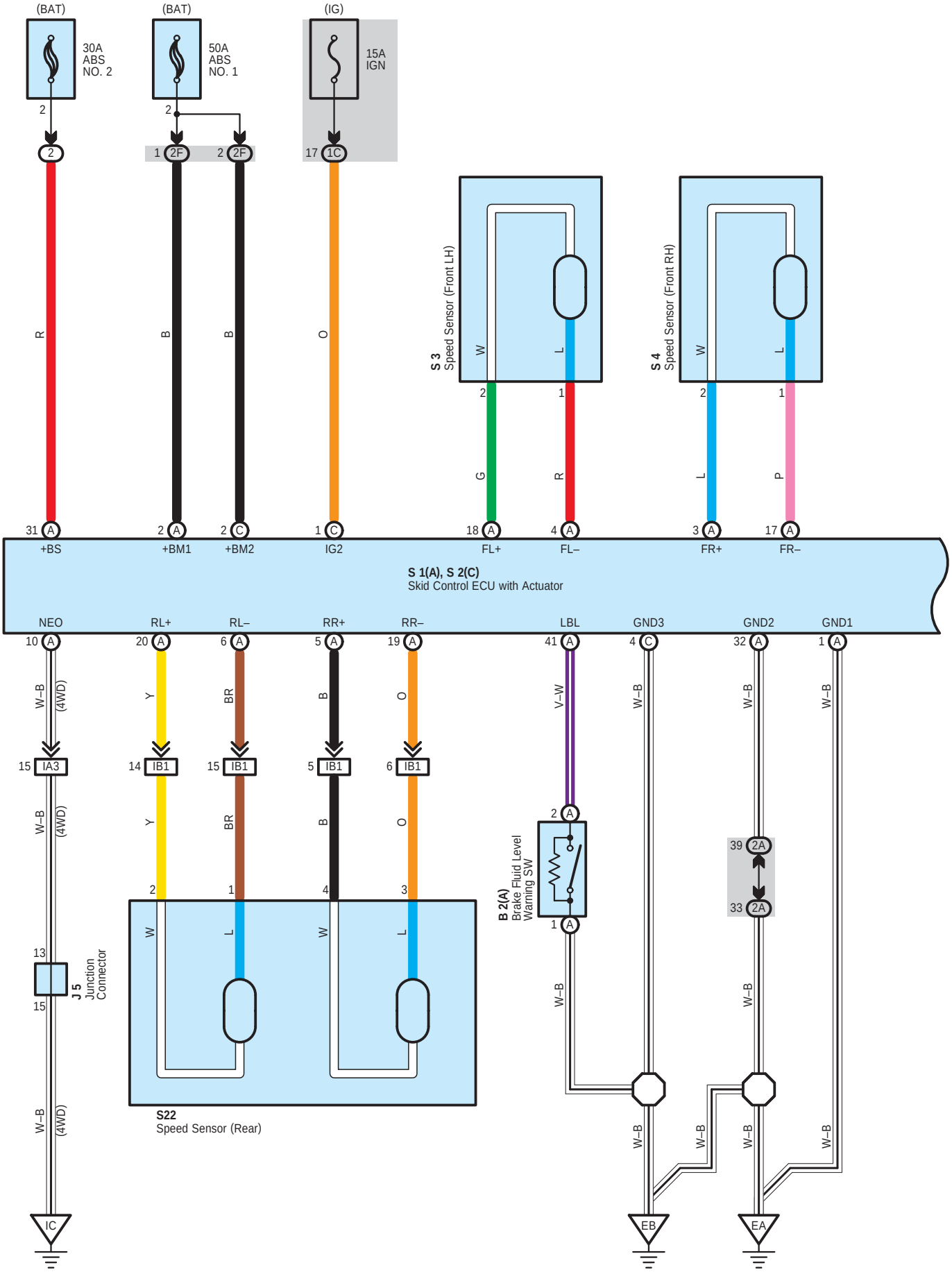
(BAT)
30A
ABS
NO. 2
(BAT)
50A
ABS
NO. 1
(IG)
15A
IGN
S 3
Speed Sensor (Front LH)
S 4
Speed Sensor (Front RH)
+BS
+BM1
+BM2
IG2
FL+
FL–
FR+
FR–
S 1(A), S 2(C)
Skid Control ECU with Actuator
NEO
RL+
RL–
RR+
RR–
LBL
GND3
GND2
GND1
J 5
Junction
Connector
S22
Speed Sensor (Rear)
B 2(A)
Brake Fluid Level
Warning SW
IC
EB
EA

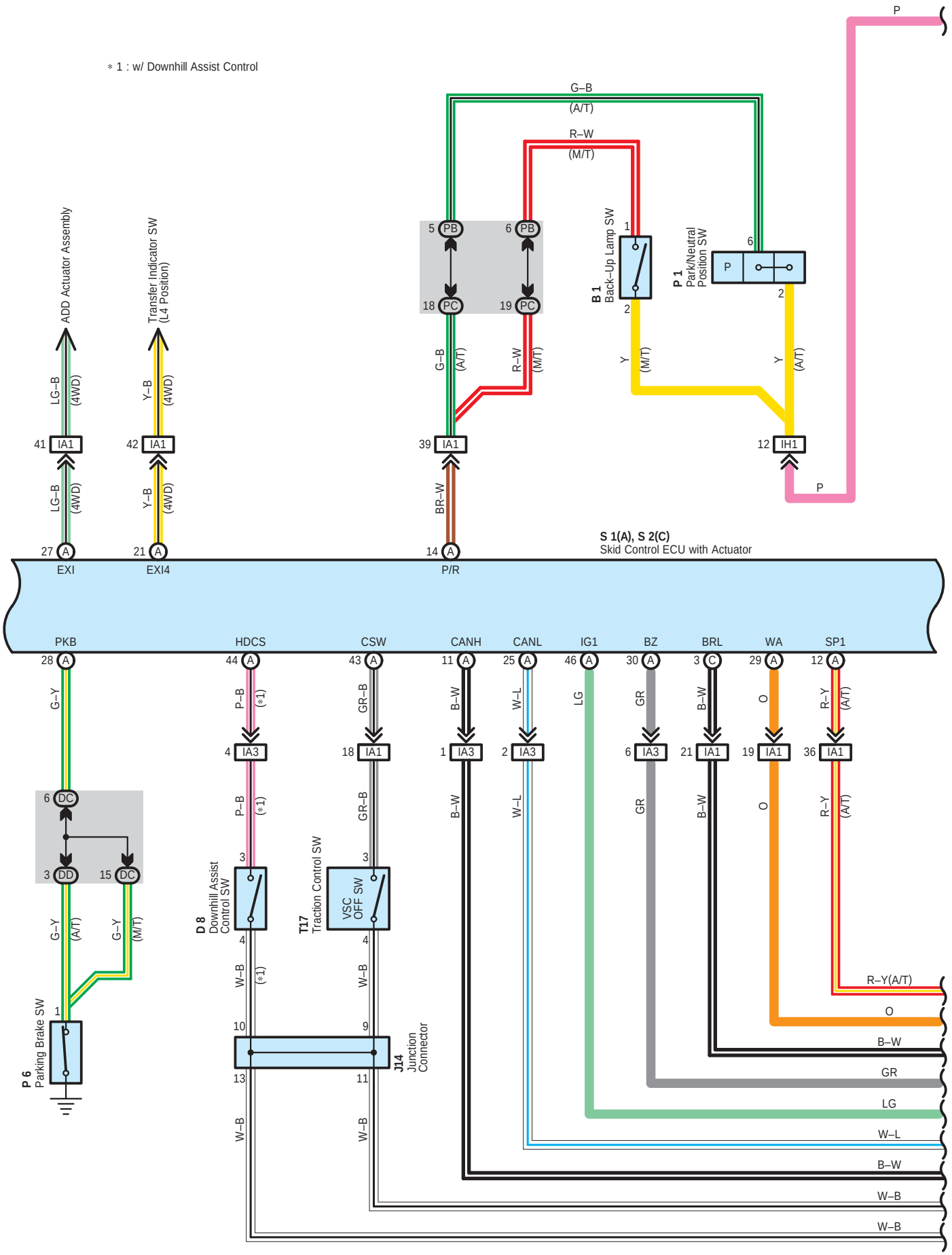
∗1 : w/ Downhill Assist Control
ADD Actuator Assembly
Transfer Indicator SW (L4 Position)
LG–B (4WD)
Y–B (4WD)
41 IA1
42 IA1
27 A EXI
21 A EXI4
G–B (A/T)
R–W (M/T)
5 PB
6 PB
18 PC
19 PC
39 IA1
14 A P/R
BR–W
B 1 Back–Up Lamp SW
P 1 Park/Neutral Position SW
12 IH1
P
S 1(A), S 2(C) Skid Control ECU with Actuator
PKB
HDCS
CSW
CANH
CANL
IG1
BZ
BRL
WA
SP1
28 A
44 A
43 A
11 A
25 A
46 A
30 A
3 C
29 A
12 A
G–Y
P–B (∗1)
GR–B
B–W
W–L
LG
GR
O
R–Y (A/T)
6 DC
3 DD
15 DC
4 IA3
18 IA1
1 IA3
2 IA3
6 IA3
21 IA1
19 IA1
36 IA1
G–Y (A/T)
G–Y (M/T)
D 8 Downhill Assist Control SW
T17 Traction Control SW
VSC OFF SW
W–B (∗1)
W–B
P 6 Parking Brake SW
J14 Junction Connector
R–Y(A/T)
O
B–W
GR
LG
W–L
B–W
W–B
W–B

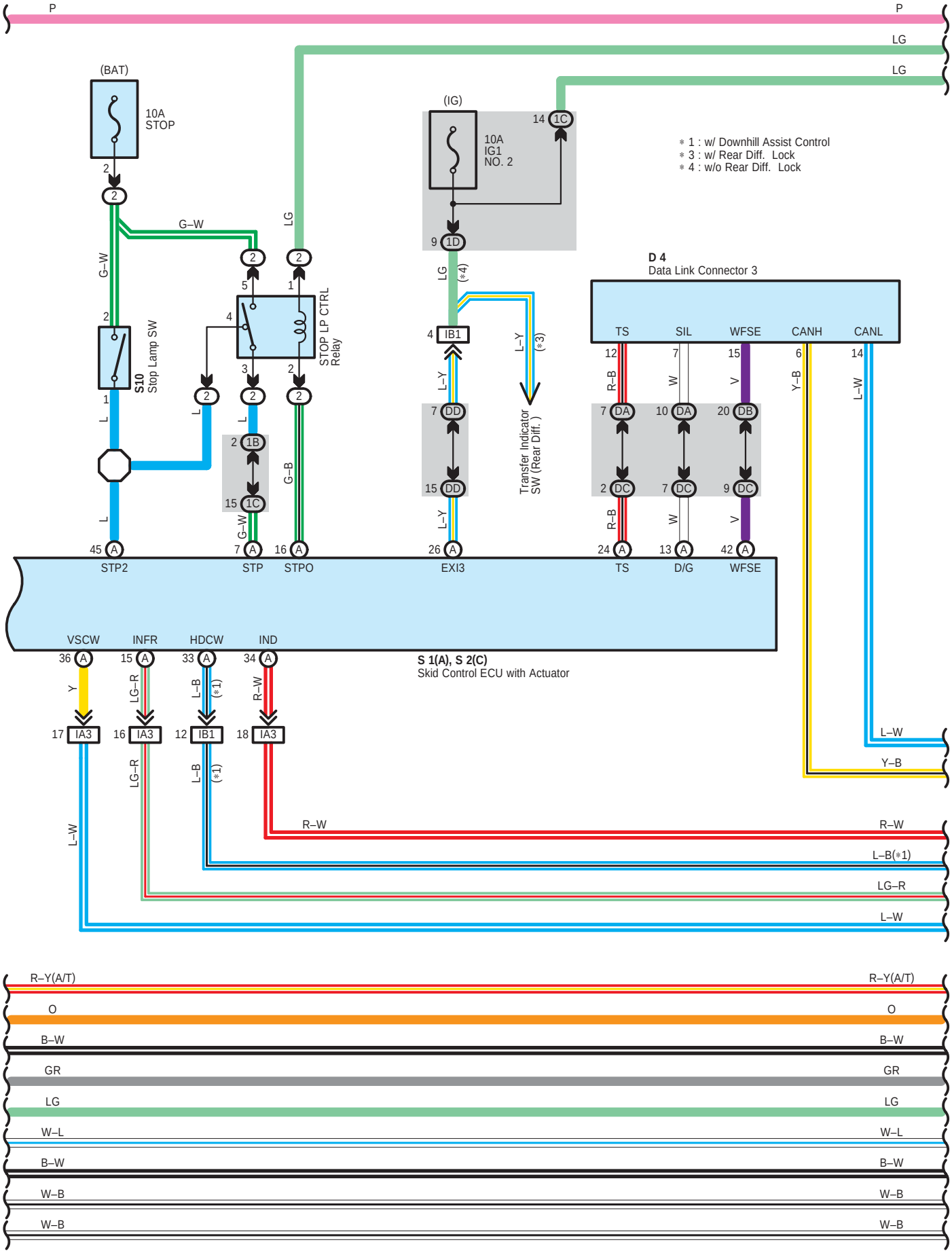
P
LG
(BAT)
10A
STOP
(IG)
10A
IG1
NO. 2
∗ 1 : w/ Downhill Assist Control
∗ 3 : w/ Rear Diff. Lock
∗ 4 : w/o Rear Diff. Lock
G–W
S10
Stop Lamp SW
STOP LP CTRL
Relay
D 4
Data Link Connector 3
TS
SIL
WFSE
CANH
CANL
Transfer Indicator
SW (Rear Diff.)
STP2
STP
STPO
EXI3
TS
D/G
WFSE
VSCW
INFR
HDCW
IND
S 1(A), S 2(C)
Skid Control ECU with Actuator
L–W
Y–B
R–W
L–B(∗1)
LG–R
L–W

R–Y(A/T)
O
B–W
GR
LG
W–L
B–W
W–B
W–B

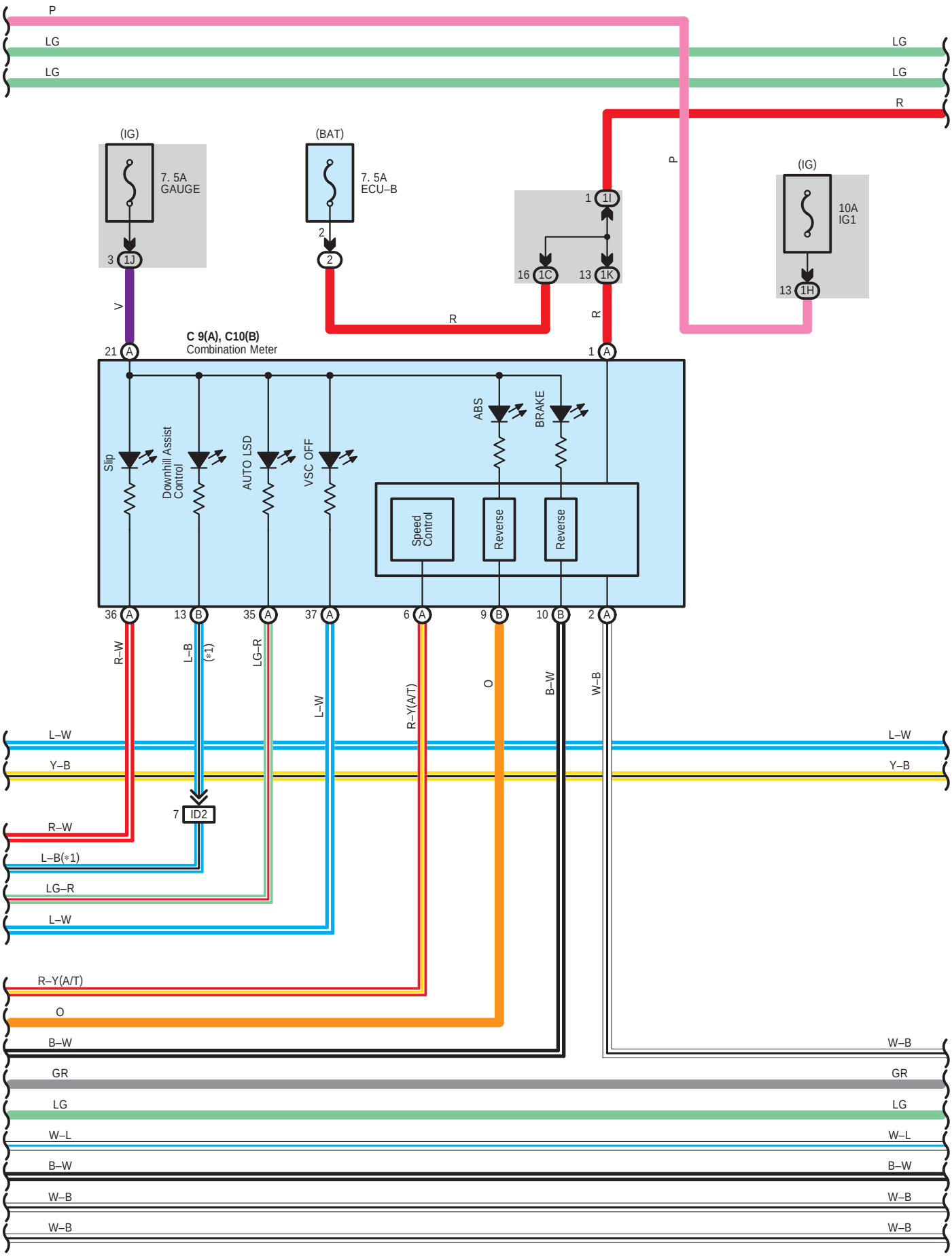
P
LG
LG
LG
LG
R
(IG)
7. 5A
GAUGE
3 1J
V
(BAT)
7. 5A
ECU–B
2
2
R
1 1I
16 1C
13 1K
R
P
(IG)
10A
IG1
13 1H
C 9(A), C10(B)
Combination Meter
21 A
1 A
Slip
Downhill Assist Control
AUTO LSD
VSC OFF
ABS
BRAKE
Speed Control
Reverse
Reverse
36 A
13 B
35 A
37 A
6 A
9 B
10 B
2 A
R–W
L–B
(*1)
LG–R
L–W
R–Y(A/T)
O
B–W
W–B
L–W
Y–B
7 ID2
R–W
L–B(*1)
LG–R
L–W
R–Y(A/T)
O
B–W
L–W
Y–B
W–B
GR
LG
W–L
B–W
W–B
W–B
GR
LG
W–L
B–W
W–B
W–B

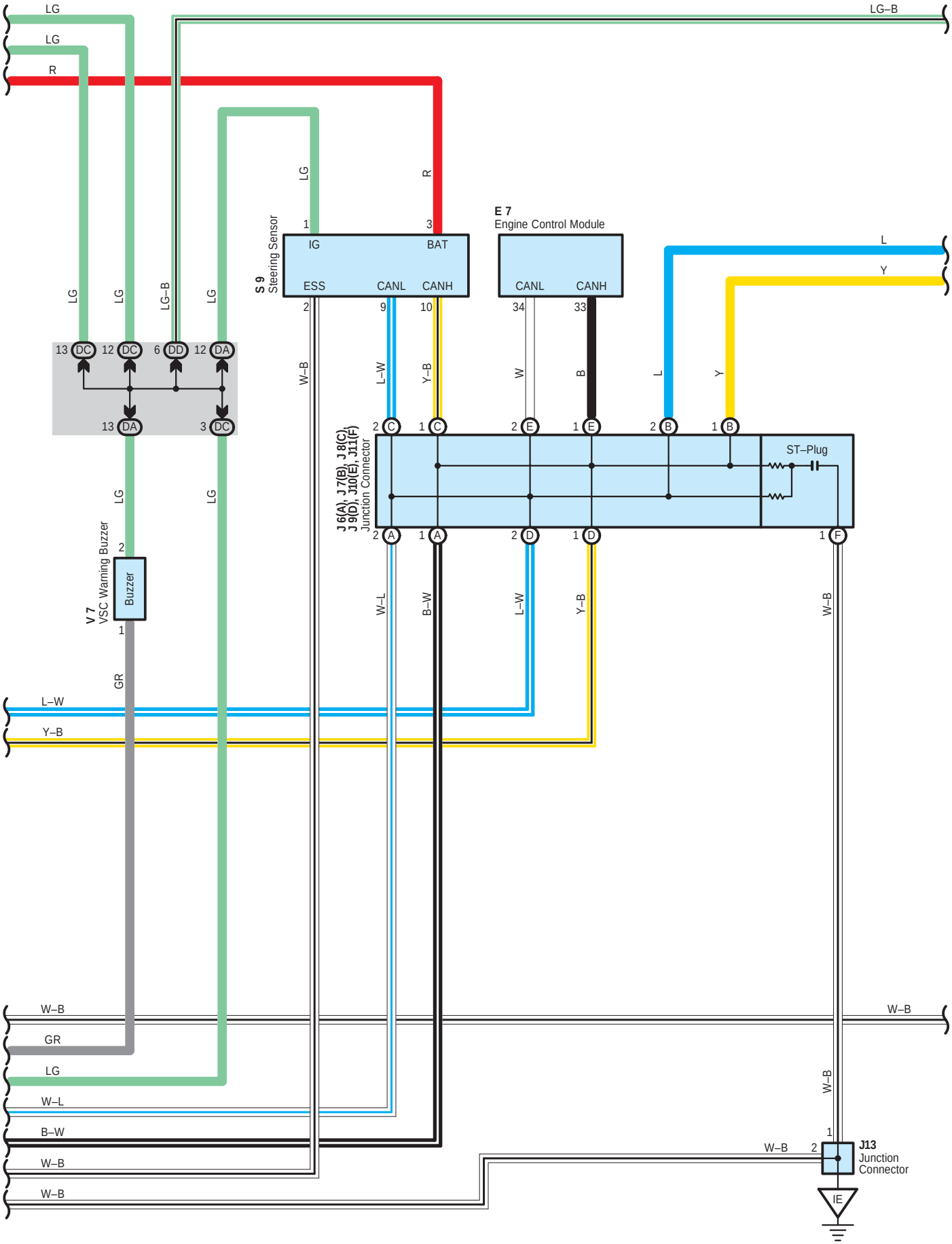
LG
LG
R
LG–B
S 9
Steering Sensor
IG
BAT
ESS
CANL
CANH
E 7
Engine Control Module
CANL
CANH
L
Y
LG
LG
LG–B
LG
W–B
L–W
Y–B
W
B
L
Y
13 DC
12 DC
6 DD
12 DA
13 DA
3 DC
J 6(A), J 7(B), J 8(C),
J 9(D), J10(E), J11(F)
Junction Connector
ST–Plug
V 7
VSC Warning Buzzer
Buzzer
GR
W–L
B–W
Y–B
L–W
Y–B
W–B
W–B
GR
LG
W–L
B–W
W–B
W–B
W–B
W–B
J13
Junction
Connector
IE

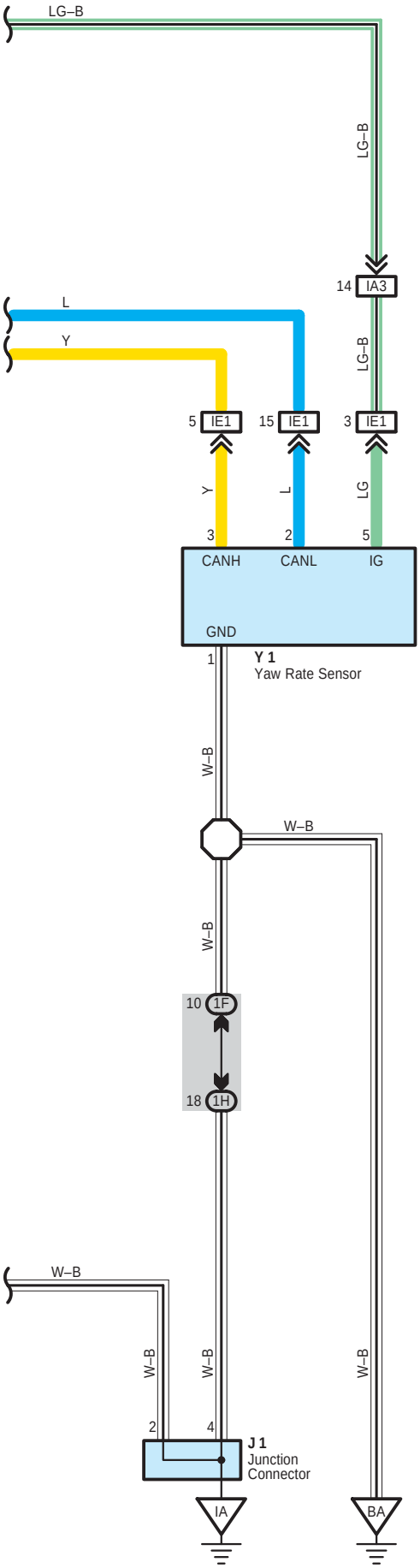
LG–B
LG–B
14
IA3
L
Y
LG–B
5
IE1
15
IE1
3
IE1
Y
L
LG
3
2
5
CANH
CANL
IG
GND
1
Y 1
Yaw Rate Sensor
W–B
W–B
W–B
10
1F
18
1H
W–B
W–B
W–B
W–B
2
4
J 1
Junction
Connector
IA
BA

System Outline

1. Normal Operation

The VSC system helps prevent the vehicle from slipping sideways as a result of strong front wheel skid or strong rear wheel skid during cornering.

The followings are two examples that can be considered as circumstances in which the tires exceed their lateral grip limit. The VSC system is designed to help control the vehicle behavior by controlling the engine's output and the brakes at each wheel when the vehicle is under one of the conditions indicated below.

* When the front wheels lose grip in relation to the rear wheels (Strong front wheel skid tendency).
* When the rear wheels lose grip in relation to the front wheels (Strong rear wheel skid tendency).

2. Electronic Brake–Force Distribution

Skid control ECU with actuator distributes appropriate brake–force to front and rear wheels (Control of brake–force distribution to front and rear wheels) corresponding to the vehicle driving conditions. It also makes effective use of rear wheel brake–force to match loading condition and decelerating of the vehicle, resulting to reduce depressing of brake pedal and to ensure effective braking. In braking during making a turn, the ECU controls appropriate brake–force distribution to right and left wheels (Control of brake–force distribution to right and left wheels) to ensure stability and braking of the vehicle.

3. Downhill Assist Control Operation

The downhill assist control operation controls braking action of each wheel to help prevent out–of–balance vehicle posture when descending a steep hill or traveling at a speed exceeding the threshold of wheel gripping capability. When the downhill assist control is in operation, the brake system controls vehicle speed within the range of 5 to 7 km/h.

For the downhill assist control to be operative all of the following conditions have to be met:

* Downhill assist control switch = ON
* Transfer L4 selected
* Vehicle speed is 5 km/h or more, but less than 25 km/h.
* Accelerator pedal OFF
* Brake pedal OFF

4. Hill–Start Assist Control Operation

When starting on a steep hill for ascending, the hill–start assist control automatically puts the brake on momentarily – from the moment when the driver releases his foot from the brake pedal until he steps on the accelerator pedal – to help the driver start the vehicle safely and smoothly.

Please bear in mind, however, that it activates the brake system for only 3 seconds.

For the hill–start assist control to be operative all of the following conditions have to be met:

* Shift position = D, 2, or L
* Vehicle not moving forward with some wheel(s) slipping
* Vehicle speed > 0 km/h

5. Active TRAC (4WD)

Active traction control system provides great effect of LSD (Limited Slip Differential) to deliver driving force lost due to the acceleration slip to each of 4 wheels by conducting the brake oil control on slipped wheels caused by acceleration during 4WD driving.

6. Auto LSD (2WD)

Auto LSD fulfills the function of LSD (Limited Slip Differential) by using the system of TRAC. It controls to focus on 'getting out', which ensures to recover from run–off condition and to take off on roads with much travel resistance such as sand.

: Parts Location

Code		See Page	Code		See Page	Code	See Page
B1		40 (1GR–FE)	J9	D	45	S4	41 (1GR–FE)
		42 (2TR–FE)	J10	E	45		43 (2TR–FE)
B2	A	40 (1GR–FE)	J11	F	45	S9	45
		42 (2TR–FE)	J13		45	S10	45
C9	A	44	J14		45	S22	47 (*1)
C10	B	44	P1		41 (1GR–FE)		48 (*2)
D4		44			43 (2TR–FE)		49 (*3)
D8		44	P6		45	T17	45
E7		44	S1	A	41 (1GR–FE)	V7	45
J1		45			43 (2TR–FE)	Y1	47 (*1)
J5		45	S2	C	41 (1GR–FE)		48 (*2)
J6	A	45			43 (2TR–FE)		49 (*3)
J7	B	45	S3		41 (1GR–FE)		
J8	C	45			43 (2TR–FE)		

: Relay Blocks

Code	See Page	Relay Blocks (Relay Block Location)
2	24	Engine Room R/B (Engine Compartment Left)

: Junction Block and Wire Harness Connector

Code	See Page	Junction Block and Wire Harness (Connector Location)
1B	28	Engine Room Main Wire and Driver Side J/B (Lower Finish Panel)
1C		
1D	28	Frame Wire and Driver Side J/B (Lower Finish Panel)
1F	28	Floor No.2 Wire and Driver Side J/B (Lower Finish Panel)
1H	29	Instrument Panel Wire and Driver Side J/B (Lower Finish Panel)
1I		
1J		
1K		
2A	24	Engine Room J/B (Engine Compartment Left)
2F	25	Engine Room Main Wire and Engine Room J/B (Engine Compartment Left)
DA	34	Instrument Panel Wire and Instrument Panel J/B No.1 (Left Kick Panel)
DB		
DC	34	Engine Room Main Wire and Instrument Panel J/B No.1 (Left Kick Panel)
DD		
PB	36	Engine Wire and Instrument Panel J/B No.2 (Right Side of Glove Box)
PC	36	Instrument Panel Wire and Instrument Panel J/B No.2 (Right Side of Glove Box)

: Connector Joining Wire Harness and Wire Harness

Code	See Page	Joining Wire Harness and Wire Harness (Connector Location)
IA1	54	Instrument Panel Wire and Engine Room Main Wire (Left Kick Panel)
IA3		
IB1	54	Frame Wire and Engine Room Main Wire (Left Kick Panel)
ID2	54	Frame Wire and Instrument Panel Wire (Left Kick Panel)
IE1	54	Instrument Panel Wire and Floor No.2 Wire (Left Kick Panel)
IH1	55	Engine Wire and Instrument Panel Wire (Right Side of Glove Box)

* 1 : Double Cab * 2 : Access Cab * 3 : Regular Cab * 4 : Separate Seat * 5 : Bench Seat

▽ : **Ground Points**

Code	See Page	Ground Points Location
EA	52 (1GR–FE)	Front Right Fender
	53 (2TR–FE)	
EB	52 (1GR–FE)	Front Left Fender
	53 (2TR–FE)	
IA	54	Left Kick Panel
IC	54	Instrument Panel Brace RH
IE	54	Right Kick Panel
BA	56 (*1)	Floor Seat Cross Member LH
	57 (*2)	
	58 (*3)	

* 1 : Double Cab * 2 : Access Cab * 3 : Regular Cab * 4 : Separate Seat * 5 : Bench Seat

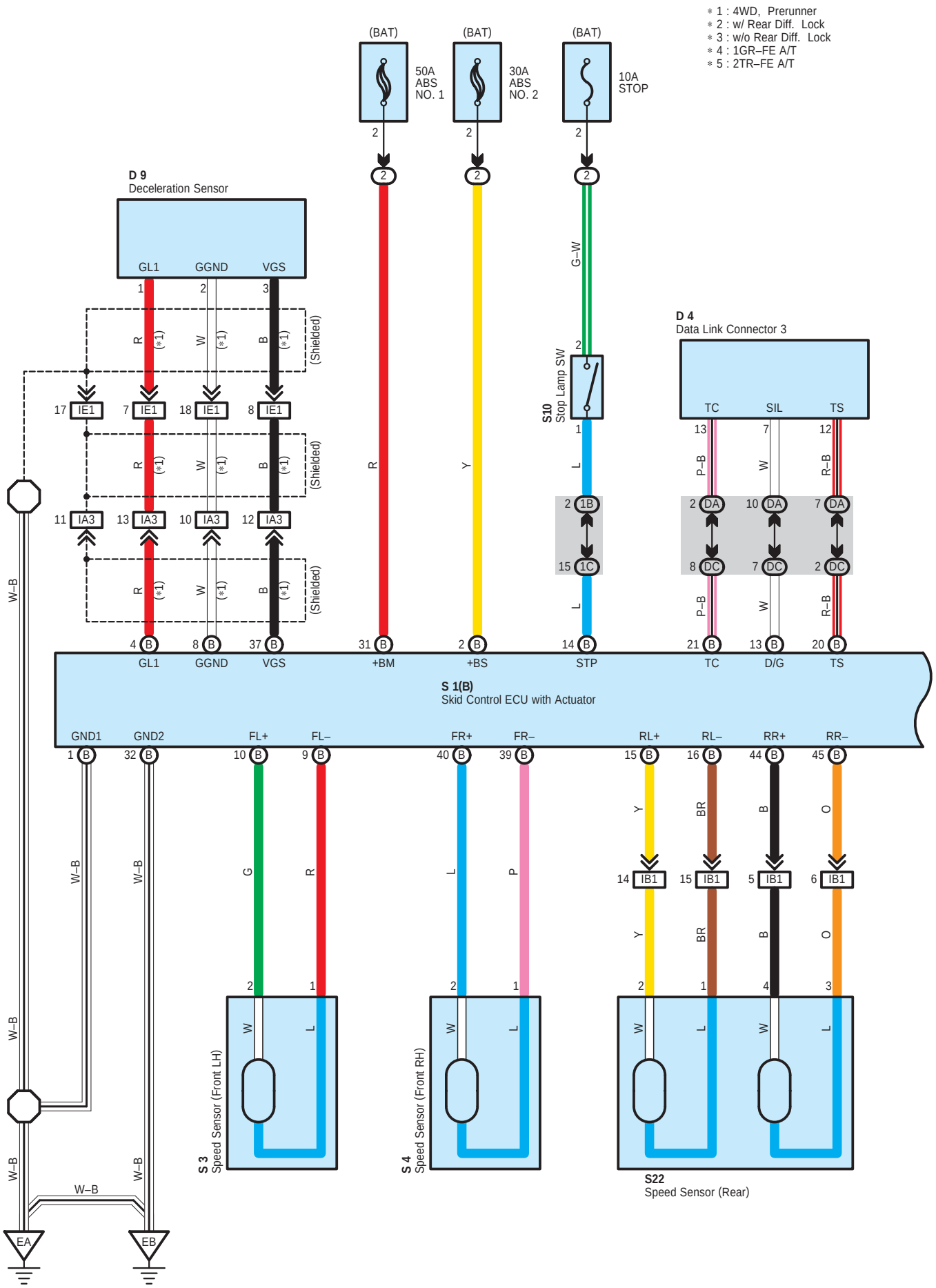
* 1 : 4WD, Prerunner
* 2 : w/ Rear Diff. Lock
* 3 : w/o Rear Diff. Lock
* 4 : 1GR–FE A/T
* 5 : 2TR–FE A/T
(BAT)
50A ABS NO. 1
(BAT)
30A ABS NO. 2
(BAT)
10A STOP
D 9
Deceleration Sensor
GL1
GGND
VGS
(Shielded)
IE1
IA3
S10
Stop Lamp SW
G–W
D 4
Data Link Connector 3
TC
SIL
TS
S 1(B)
Skid Control ECU with Actuator
+BM
+BS
STP
D/G
GND1
GND2
FL+
FL–
FR+
FR–
RL+
RL–
RR+
RR–
IB1
S 3
Speed Sensor (Front LH)
S 4
Speed Sensor (Front RH)
S22
Speed Sensor (Rear)
W–B
EA
EB

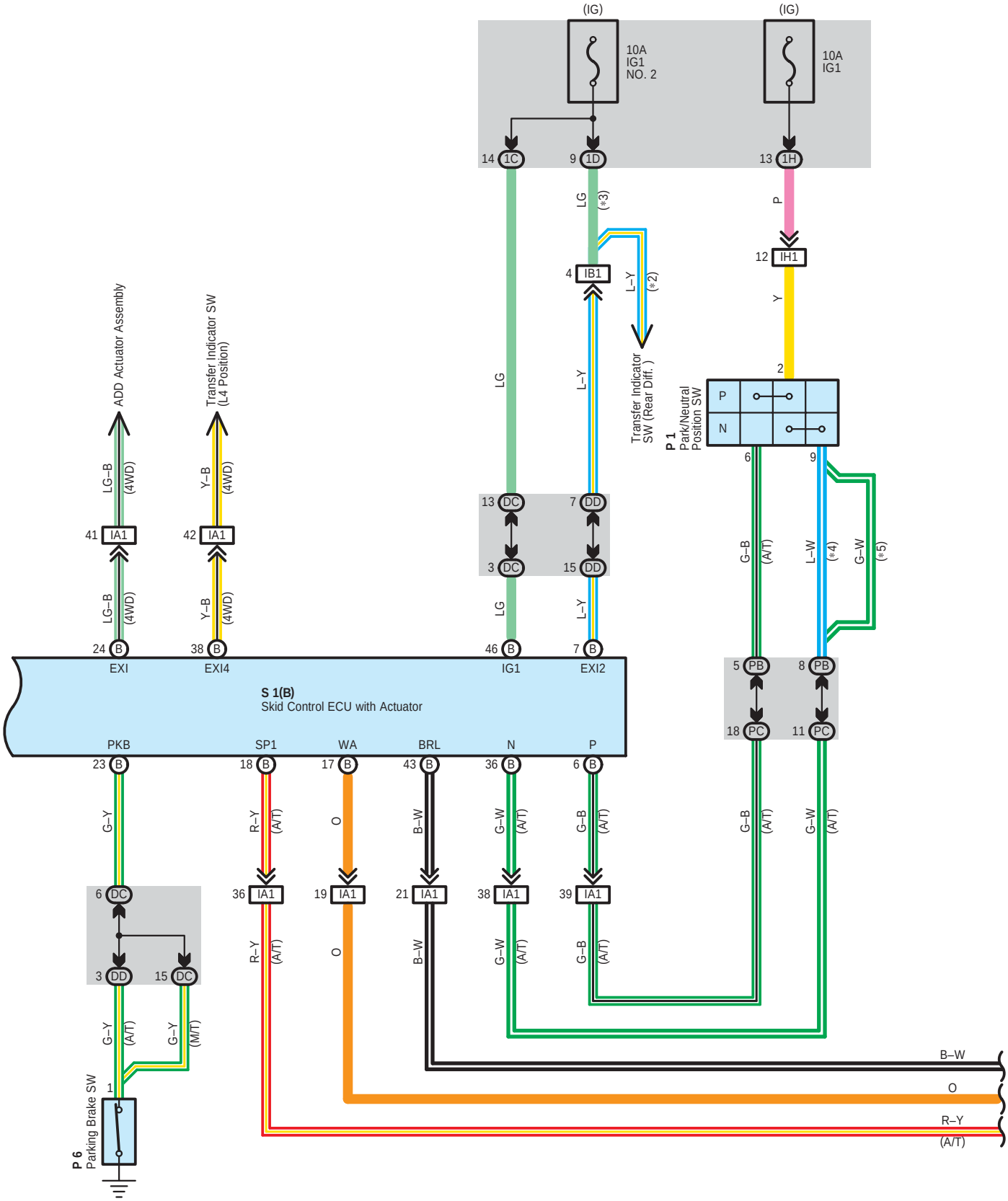
(IG)
10A
IG1
NO. 2
(IG)
10A
IG1
14 1C
9 1D
13 1H
LG
(*3)
P
12 IH1
4 IB1
L–Y
(*2)
Y
2
Transfer Indicator
SW (Rear Diff.)
P 1
Park/Neutral
Position SW
P
N
6
9
ADD Actuator Assembly
Transfer Indicator SW
(L4 Position)
LG–B
(4WD)
Y–B
(4WD)
41 IA1
42 IA1
LG–B
(4WD)
Y–B
(4WD)
LG
L–Y
13 DC
7 DD
3 DC
15 DD
G–B
(A/T)
L–W
(*4)
G–W
(*5)
24 B
38 B
46 B
7 B
5 PB
8 PB
18 PC
11 PC
EXI
EXI4
IG1
EXI2
S 1(B)
Skid Control ECU with Actuator
PKB
SP1
WA
BRL
N
P
23 B
18 B
17 B
43 B
36 B
6 B
G–Y
R–Y
(A/T)
O
B–W
G–W
(A/T)
G–B
(A/T)
G–B
(A/T)
G–W
(A/T)
6 DC
3 DD
15 DC
36 IA1
19 IA1
21 IA1
38 IA1
39 IA1
G–Y
(A/T)
G–Y
(M/T)
R–Y
(A/T)
O
B–W
G–W
(A/T)
G–B
(A/T)
1
P 6
Parking Brake SW
B–W
O
R–Y
(A/T)

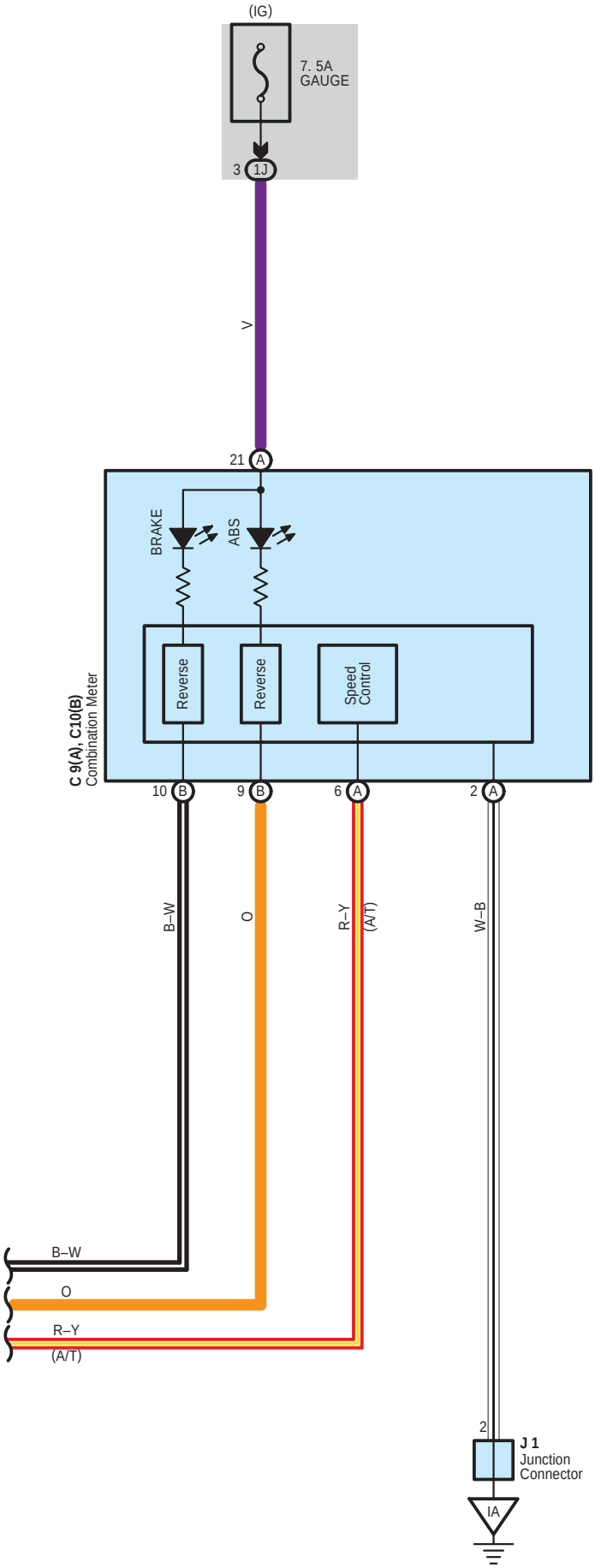
(IG)
7. 5A
GAUGE
3
1J
V
21
A
BRAKE
ABS
Reverse
Reverse
Speed
Control
C 9(A), C10(B)
Combination Meter
10
B
9
B
6
A
2
A
B–W
O
R–Y
(A/T)
W–B
B–W
O
R–Y
(A/T)
2
J 1
Junction
Connector
IA

System Outline

This system controls the respective brake fluid pressures acting on the disc brake cylinders of the right front wheel, left front wheel and rear wheels when the brakes are applied in a panic stop so that the wheels do not lock. This results in improved directional stability and steerability during panic braking.

1. Input Signals

(1) Speed sensor signal

The speed of the wheels is detected and input to TERMINALS (B) 10, (B) 15, (B) 40 and (B) 44 of the skid control ECU with actuator.

(2) Stop lamp SW signal

A signal is input to TERMINAL (B) 14 of the skid control ECU with actuator when the brake pedal is depressed.

2. System Operation

During sudden braking the skid control ECU with actuator has signals input from each sensor, which controls the current to the solenoid inside the actuator and lets the hydraulic pressure acting on each wheel cylinder escape to the reservoir. The pump inside the actuator is also operating at this time and it returns the brake fluid from the reservoir to the master cylinder, thus preventing locking of the vehicle wheels.

If the skid control ECU with actuator judges that the hydraulic pressure acting on the wheel cylinder is insufficient, the current on the solenoid is controlled and the hydraulic pressure is increased. Holding of the hydraulic pressure is also controlled by the skid control ECU with actuator, by the same method as above. Pressure reduction, holding and increase are repeated to maintain vehicle stability and to improve steerability during sudden braking.

○ : Parts Location

Code	See Page	Code	See Page	Code	See Page
C9 A	44	P1	41 (1GR–FE)	S4	41 (1GR–FE)
C10 B	44		43 (2TR–FE)		43 (2TR–FE)
D4	44	P6	45	S10	45
D9	46 (*1)	S1 B	41 (1GR–FE)	S22	47 (*1)
	48 (*2)		43 (2TR–FE)		48 (*2)
	49 (*3)	S3	41 (1GR–FE)		49 (*3)
J1	45		43 (2TR–FE)		

▭ : Relay Blocks

Code	See Page	Relay Blocks (Relay Block Location)
2	24	Engine Room R/B (Engine Compartment Left)

▭ : Junction Block and Wire Harness Connector

Code	See Page	Junction Block and Wire Harness (Connector Location)
1B	28	Engine Room Main Wire and Driver Side J/B (Lower Finish Panel)
1C		
1D	28	Frame Wire and Driver Side J/B (Lower Finish Panel)
1H	29	Instrument Panel Wire and Driver Side J/B (Lower Finish Panel)
1J		
DA	34	Instrument Panel Wire and Instrument Panel J/B No.1 (Left Kick Panel)
DC	34	Engine Room Main Wire and Instrument Panel J/B No.1 (Left Kick Panel)
DD		
PB	36	Engine Wire and Instrument Panel J/B No.2 (Right Side of Glove Box)
PC	36	Instrument Panel Wire and Instrument Panel J/B No.2 (Right Side of Glove Box)

▭ : Connector Joining Wire Harness and Wire Harness

Code	See Page	Joining Wire Harness and Wire Harness (Connector Location)
IA1	54	Instrument Panel Wire and Engine Room Main Wire (Left Kick Panel)
IA3		
IB1	54	Frame Wire and Engine Room Main Wire (Left Kick Panel)
IE1	54	Instrument Panel Wire and Floor No.2 Wire (Left Kick Panel)
IH1	55	Engine Wire and Instrument Panel Wire (Right Side of Glove Box)

* 1 : Double Cab * 2 : Access Cab * 3 : Regular Cab * 4 : Separate Seat * 5 : Bench Seat

▽ : **Ground Points**

Code	See Page	Ground Points Location
EA	52 (1GR–FE)	Front Right Fender
	53 (2TR–FE)	
EB	52 (1GR–FE)	Front Left Fender
	53 (2TR–FE)	
IA	54	Left Kick Panel

NOTICE: When inspecting or repairing the SRS, perform service in accordance with the following precautionary instructions and the procedure, and precautions in the Repair Manual applicable for the model year.

- Malfunction symptoms of the SRS are difficult to confirm, so the DTCs become the most important source of information when troubleshooting. When troubleshooting the SRS, always inspect the DTCs before disconnecting the battery.
- **Work must be started more than 90 seconds after the ignition SW is turned to the "LOCK" position and the negative (–) terminal cable is disconnected from the battery.**
  (The SRS is equipped with a back–up power source so that if work is started within 90 seconds from disconnecting the negative (–) terminal cable of the battery, the SRS may deploy.)
- When the negative (–) terminal cable is disconnected from the battery, the memory of the clock and audio system will be cleared. So before starting work, make a record of the contents in the audio memory system. When work is finished, reset the audio systems as they were before and adjust the clock. Some vehicles have power tilt steering, power telescopic steering, power seat and power outside rear view mirror which are all equipped with memory function. However, it is not possible to make a record of these memory contents. So when the work is finished, it will be necessary to explain it to your customer, and ask the customer to adjust the features and reset the memory. To avoid erasing the memory in each system, never use a back–up power supply from outside the vehicle.
- Before repair, remove the airbag sensor if shocks are likely to be applied to the sensor during repair.
- Do not expose the following parts directly to hot air or flame;
- Even in cases of a minor collision where the SRS does not deploy, the following parts should be inspected;
- Never use SRS parts from another vehicle. When replacing parts, replace with new parts.
- For the purpose of reuse, never disassemble and repair the following parts.
- If the following parts have been dropped, or have cracks, dents and other defects in their case, bracket, and connector, replace with new one.
- Use a volt/ohmmeter with high impedance (10 kΩ/V minimum) for troubleshooting electrical circuits of the system.
- Information labels are attached to the periphery of the SRS components. Follow the instructions of the notice.
- After work on the SRS is completed, check the SRS warning light.
- If the vehicle is equipped with a mobile communication system, refer to the precaution in the IN section of the Repair Manual.

* Steering wheel pad
* Front passenger airbag assembly
* Side airbag assembly
* Curtain shield airbag assembly
* Seat belt pretensioner
* Center airbag sensor assembly
* Front airbag sensor assembly
* Side airbag sensor assembly
* Rear airbag sensor assembly

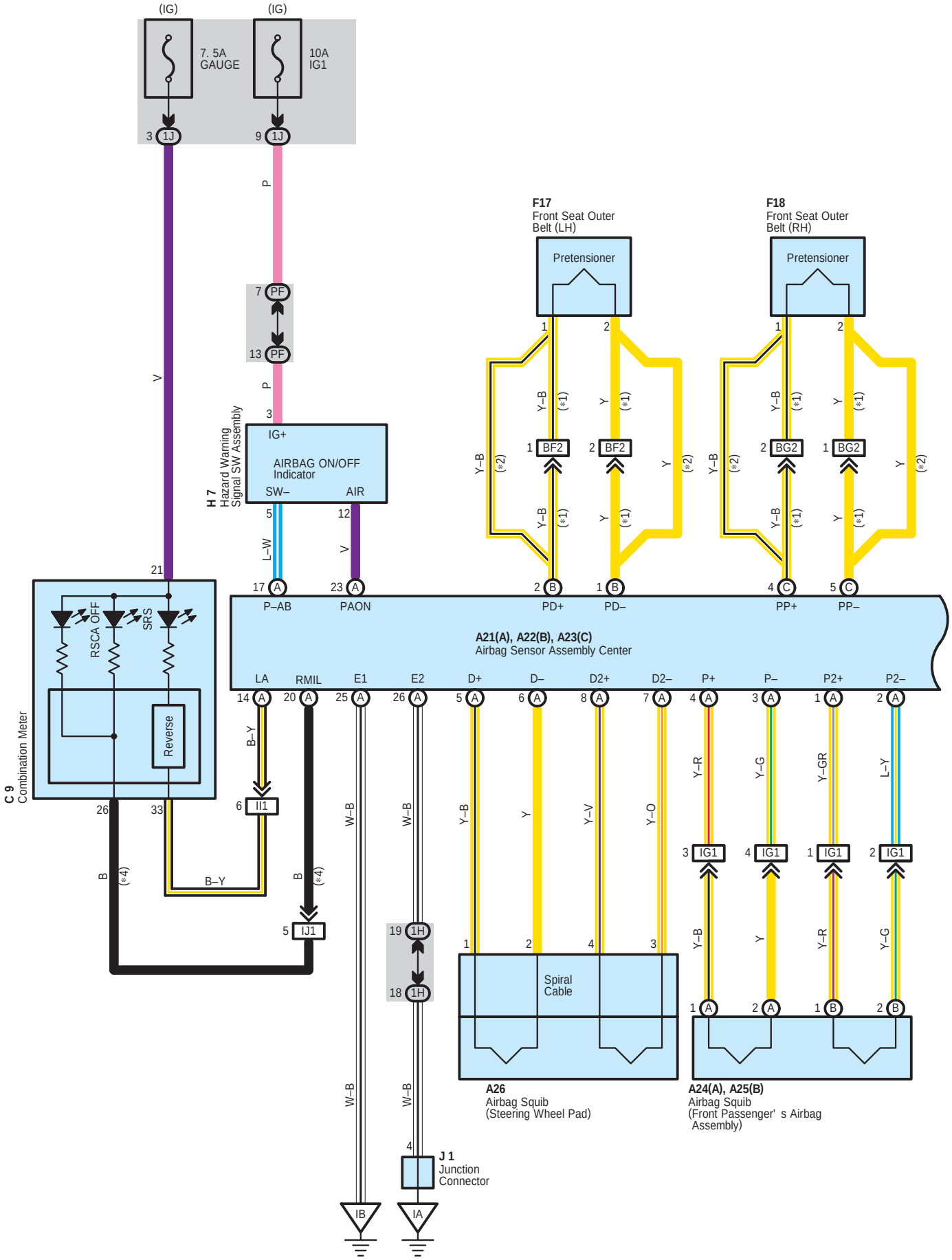
(IG)
(IG)
7. 5A
GAUGE
10A
IG1
3 1J
9 1J
P
7 PF
13 PF
P
V
3
IG+
AIRBAG ON/OFF
Indicator
SW–
AIR
H 7
Hazard Warning
Signal SW Assembly
5
12
L–W
V
21
17 A
23 A
P–AB
PAON
F17
Front Seat Outer
Belt (LH)
Pretensioner
F18
Front Seat Outer
Belt (RH)
Pretensioner
Y–B
Y
(*1)
(*2)
1 BF2
2 BF2
2 BG2
1 BG2
2 B
1 B
4 C
5 C
PD+
PD–
PP+
PP–
A21(A), A22(B), A23(C)
Airbag Sensor Assembly Center
LA
RMIL
E1
E2
D+
D–
D2+
D2–
P+
P–
P2+
P2–
14 A
20 A
25 A
26 A
5 A
6 A
8 A
7 A
4 A
3 A
1 A
2 A
C 9
Combination Meter
RSCA OFF
SRS
Reverse
26
33
B
(*4)
B–Y
6 I11
5 IJ1
W–B
19 1H
18 1H
Y–R
Y–G
Y–GR
L–Y
Y–V
Y–O
3 IG1
4 IG1
1 IG1
2 IG1
Spiral
Cable
A26
Airbag Squib
(Steering Wheel Pad)
A24(A), A25(B)
Airbag Squib
(Front Passenger' s Airbag
Assembly)
J 1
Junction
Connector
4
IB
IA

* 1 : Access Cab
* 2 : Except Access Cab
* 4 : w/ Side Airbag
* 7 : w/ Airbag Cut Off SW

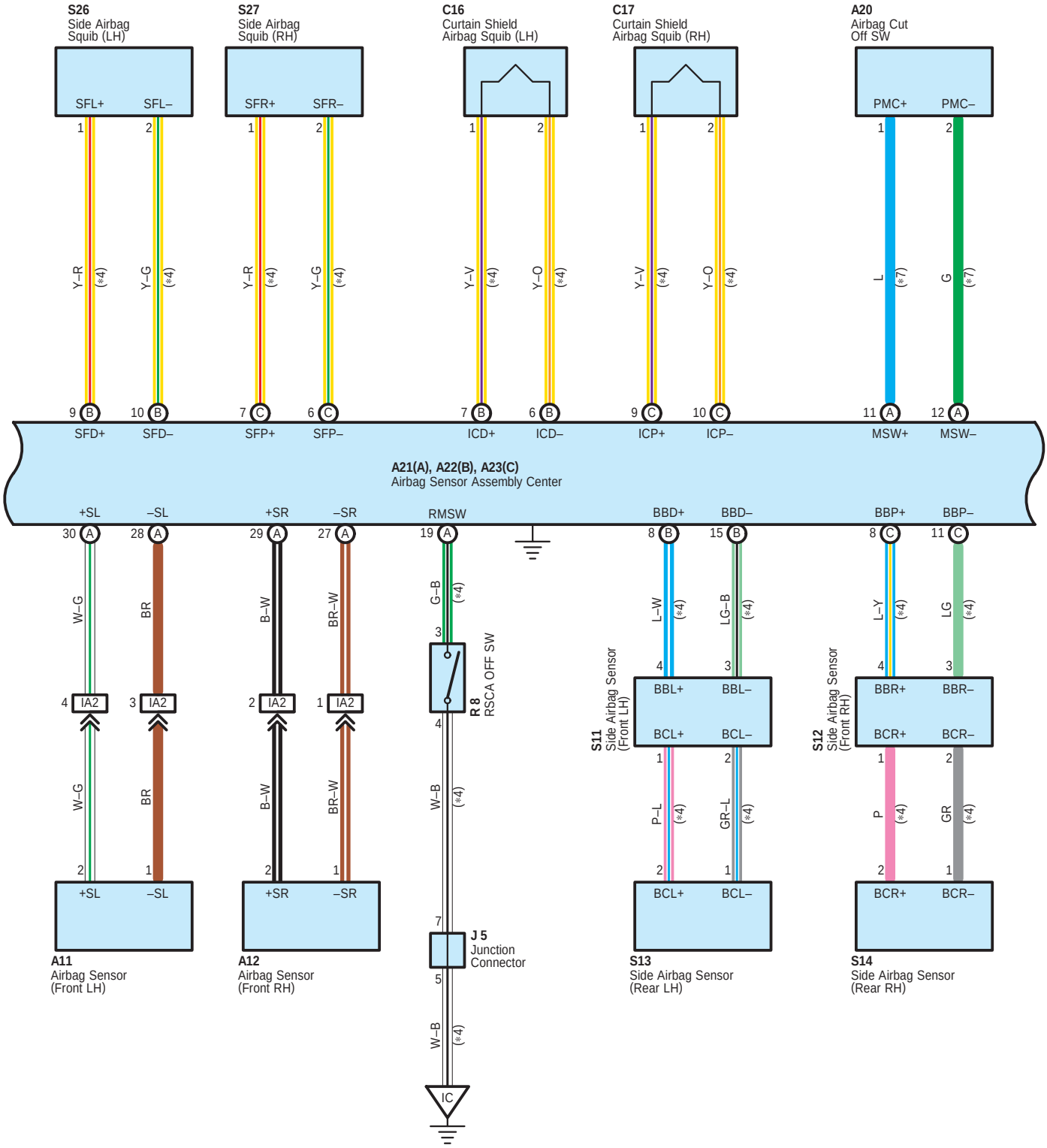

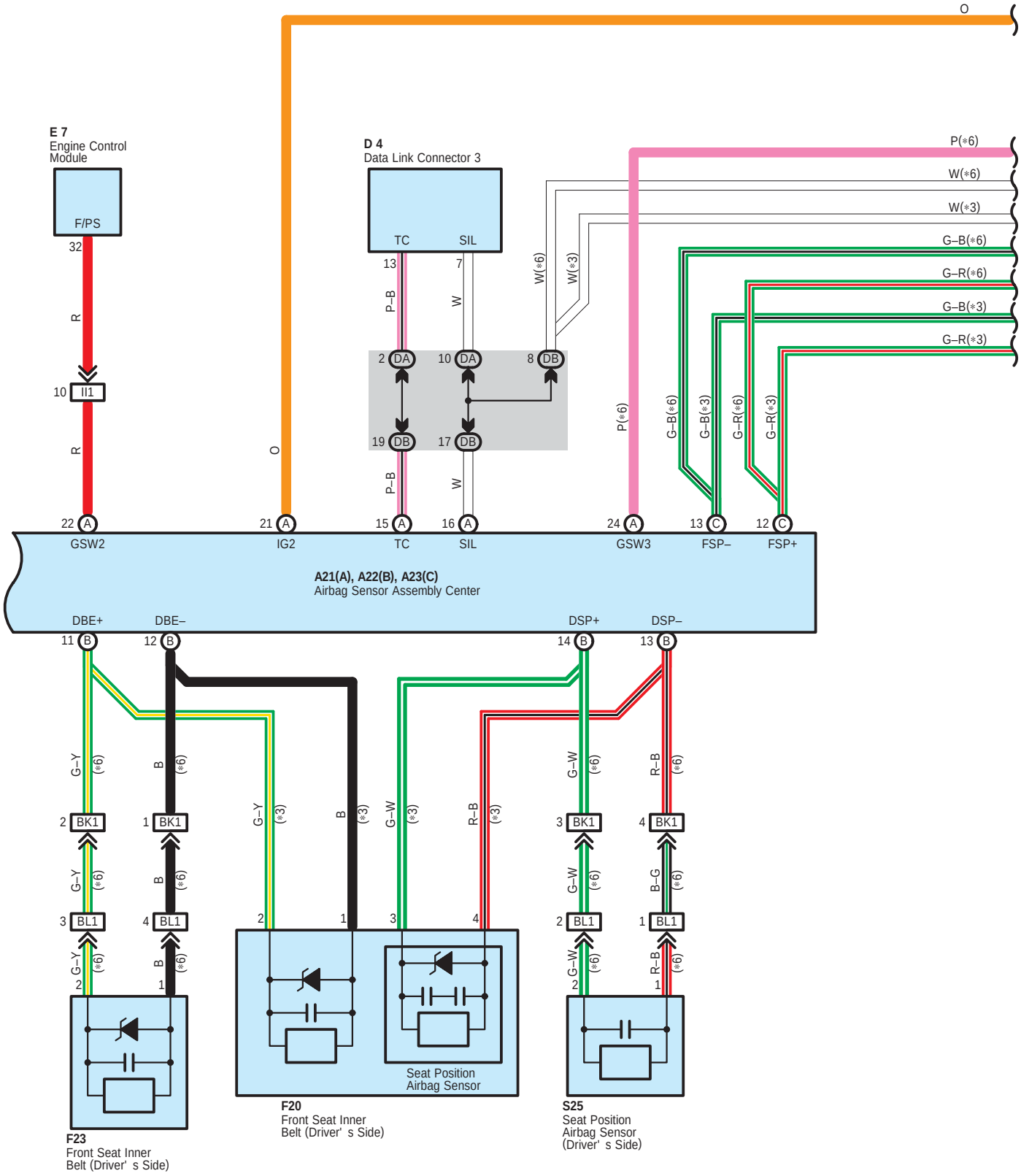
E 7
Engine Control Module
F/PS
32
R
10 II1
R
22 A
GSW2
O
21 A
IG2
D 4
Data Link Connector 3
TC
SIL
13
P–B
7
W
2 DA
10 DA
8 DB
19 DB
17 DB
P–B
W
15 A
TC
16 A
SIL
W(∗6)
W(∗3)
P(∗6)
24 A
GSW3
G–B(∗6)
G–B(∗3)
G–R(∗6)
G–R(∗3)
13 C
FSP–
12 C
FSP+
P(∗6)
W(∗6)
W(∗3)
G–B(∗6)
G–R(∗6)
G–B(∗3)
G–R(∗3)
A21(A), A22(B), A23(C)
Airbag Sensor Assembly Center
DBE+
DBE–
DSP+
DSP–
11 B
12 B
14 B
13 B
G–Y (∗6)
B (∗6)
G–Y (∗3)
B (∗3)
G–W (∗3)
R–B (∗3)
G–W (∗6)
R–B (∗6)
2 BK1
1 BK1
3 BK1
4 BK1
G–Y (∗6)
B (∗6)
G–W (∗6)
B–G (∗6)
3 BL1
4 BL1
2
1
3
4
2 BL1
1 BL1
G–Y (∗6)
B (∗6)
G–W (∗6)
R–B (∗6)
2
1
2
1
Seat Position Airbag Sensor
F23
Front Seat Inner Belt (Driver' s Side)
F20
Front Seat Inner Belt (Driver' s Side)
S25
Seat Position Airbag Sensor (Driver' s Side)

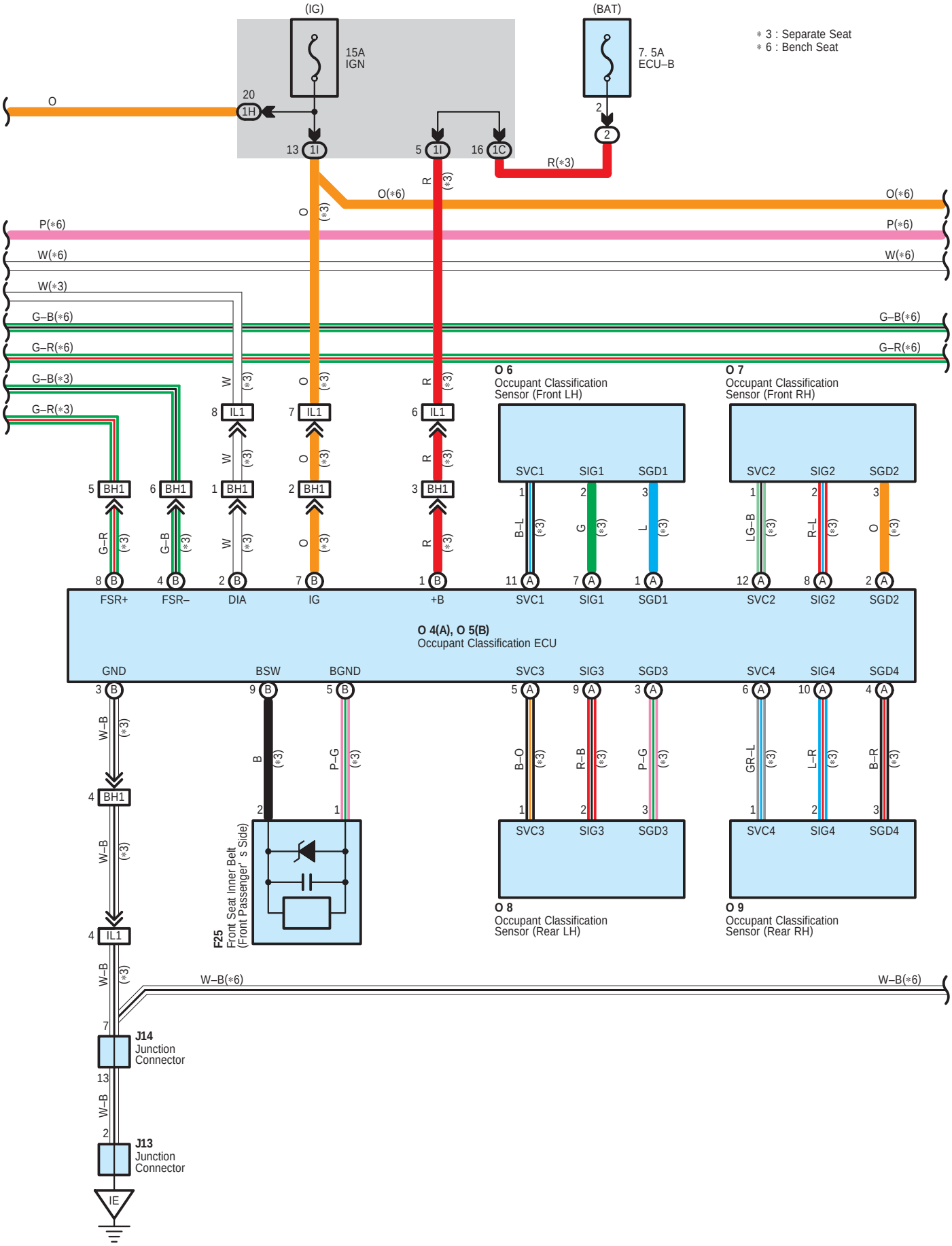
(IG)
15A
IGN
(BAT)
7. 5A
ECU–B
∗ 3 : Separate Seat
∗ 6 : Bench Seat
O
20
1H
13
1I
5
1I
16
1C
2
2
R(∗3)
O(∗6)
R
(∗3)
O
(∗3)
O(∗6)
P(∗6)
P(∗6)
W(∗6)
W(∗6)
W(∗3)
G–B(∗6)
G–B(∗6)
G–R(∗6)
G–R(∗6)
G–B(∗3)
G–R(∗3)
W
(∗3)
8
IL1
7
IL1
6
IL1
5
BH1
6
BH1
1
BH1
2
BH1
3
BH1
G–R
G–B
W
O
R
8
B
4
B
2
B
7
B
1
B
FSR+
FSR–
DIA
IG
+B
O 6
Occupant Classification
Sensor (Front LH)
O 7
Occupant Classification
Sensor (Front RH)
SVC1
SIG1
SGD1
SVC2
SIG2
SGD2
B–L
G
L
LG–B
R–L
O
11
A
7
A
1
A
12
A
8
A
2
A
O 4(A), O 5(B)
Occupant Classification ECU
GND
BSW
BGND
SVC3
SIG3
SGD3
SVC4
SIG4
SGD4
3
B
9
B
5
B
5
A
9
A
3
A
6
A
10
A
4
A
W–B
B
P–G
B–O
R–B
P–G
GR–L
L–R
B–R
4
BH1
4
IL1
F25
Front Seat Inner Belt
(Front Passenger' s Side)
O 8
Occupant Classification
Sensor (Rear LH)
O 9
Occupant Classification
Sensor (Rear RH)
W–B(∗6)
W–B(∗6)
7
J14
Junction
Connector
13
2
J13
Junction
Connector
IE

∗ 6 : Bench Seat

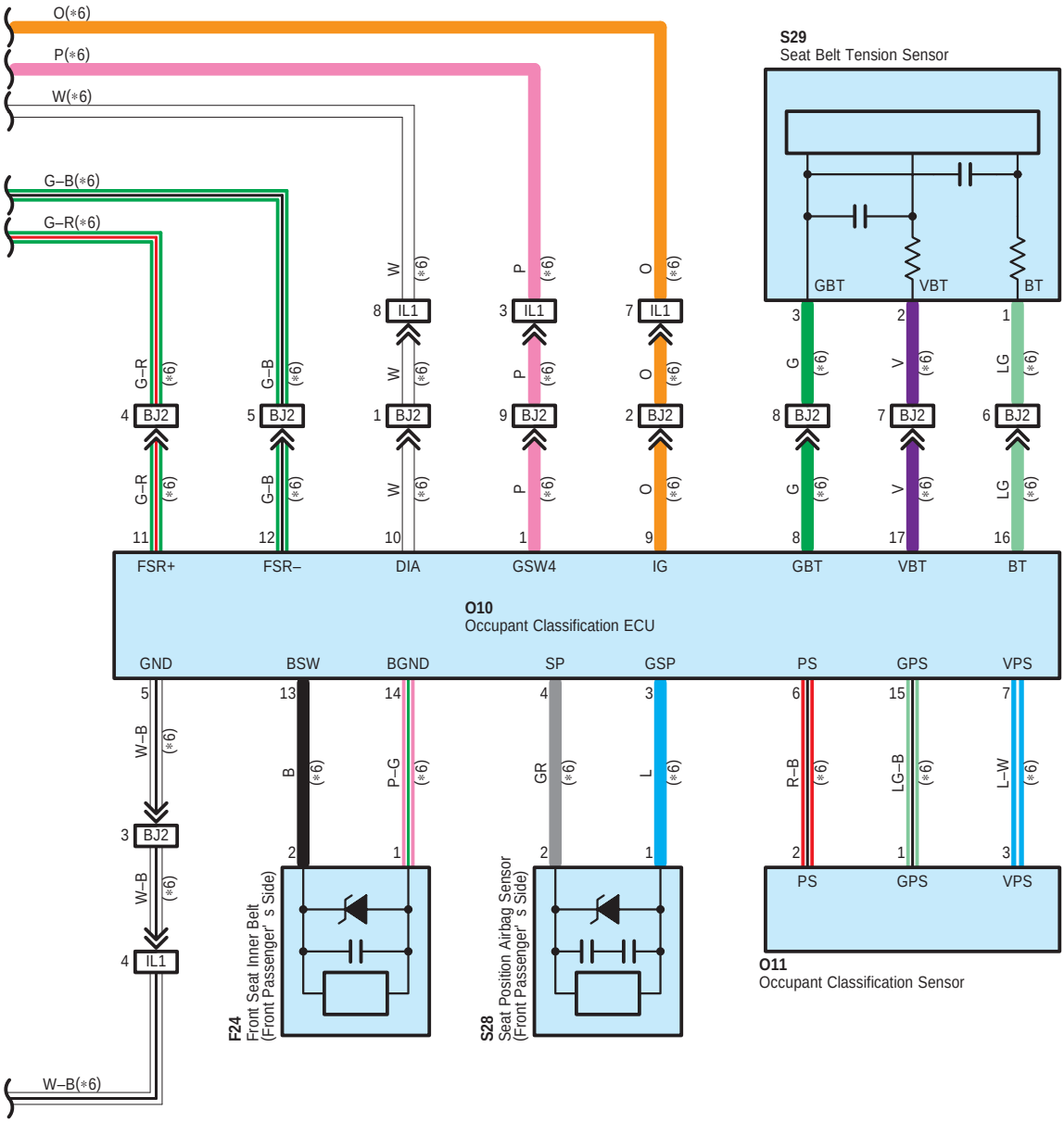
O(∗6)
P(∗6)
W(∗6)
G–B(∗6)
G–R(∗6)
S29
Seat Belt Tension Sensor
GBT
VBT
BT
FSR+
FSR–
DIA
GSW4
IG
GBT
VBT
BT
O10
Occupant Classification ECU
GND
BSW
BGND
SP
GSP
PS
GPS
VPS
W–B(∗6)
F24
Front Seat Inner Belt (Front Passenger' s Side)
S28
Seat Position Airbag Sensor (Front Passenger' s Side)
O11
Occupant Classification Sensor

System Outline

- The system reaches an ignition judgment to deploy the following device based on the signals received from the front airbag sensor and deceleration sensor.
  - Driver Airbag
  - Front Passenger Airbag
  - Seat Belt Pretensioner
- The system reaches an ignition judgment to deploy the following device based on the signals received from the side airbag sensors.
  - Side Airbags
  - Curtain Shield Airbags
- The dual–stage SRS airbag system has been used for the driver and front passenger airbags. This system controls the optimal airbag inflation by judging the extent of impact, seat position (driver seat) and whether or not the seat belt is fastened (driver seat) and information from the Front Passenger Occupant Classification System.
- The front passenger occupant classification system judges whether the front passenger seat is occupied by an adult or child (with child seat) or is unoccupied, according to the load applied to the front passenger seat and whether the seat belt is buckled. Based on the results, it restricts the deployment of the front passenger airbag, front passenger side airbag, and front passenger seat belt pretensioner. In addition, the system informs the driver of the result of the judgment through the use of the AIRBAG ON/OFF indicator lights.
- The front passenger occupant classification system judges whether the front passenger seat is occupied by an adult or child (with child seat) or is unoccupied, according to the load applied to the front passenger seat, seat position (passenger), the load applied to the belt tension sensor (passenger), and whether the seat belt is buckled (passenger). Based on the results, it restricts the deployment of the front passenger airbag, front passenger side airbag, and front passenger seat belt pretensioner. In addition, the system informs the driver of the result of the judgment through the use of the AIRBAG ON/OFF indicator lights.
- A Roll Sensing Curtain Shield Airbag system has been adopted in order to deploy the curtain shield airbags and the pretensioners, in the event that the vehicle rolls over.
- A Roll Sensing Curtain Shield Airbag cutoff SW is provided near the driver side to enable the driver to disable this system.
- The airbag manual ON–OFF switch is used to disable the deployment of the front and side airbags for the front passenger, such as when a child seat is installed on the front passenger seat.
- The airbag sensor assembly transmits a signal to the engine control module in order to stop the fuel pump.

○ : Parts Location

Code	See Page	Code	See Page	Code	See Page
A11	40 (1GR–FE)	F17	48 (*2)	O7	50 (*4)
	42 (2TR–FE)		49 (*3)	O8	50 (*4)
A12	40 (1GR–FE)	F18	46 (*1)	O9	50 (*4)
	42 (2TR–FE)		48 (*2)	O10	51 (*5)
A20	44		49 (*3)	O11	51 (*5)
A21 A	44	F20	50 (*4)	R8	45
A22 B	44	F23	51 (*5)	S11	47 (*1)
A23 C	44	F24	51 (*5)	S12	47 (*1)
A24 A	44	F25	50 (*4)	S13	47 (*1)
A25 B	44	H7	45	S14	47 (*1)
A26	44	J1	45	S25	51 (*5)
C9	44	J5	45	S26	50 (*4)
C16	46 (*1)	J13	45	S27	50 (*4)
C17	46 (*1)	J14	45	S28	51 (*5)
D4	44	O4 A	50 (*4)	S29	49 (*3)
E7	44	O5 B	50 (*4)		
F17	46 (*1)	O6	50 (*4)		

▭ : Relay Blocks

Code	See Page	Relay Blocks (Relay Block Location)
2	24	Engine Room R/B (Engine Compartment Left)

* 1 : Double Cab * 2 : Access Cab * 3 : Regular Cab * 4 : Separate Seat * 5 : Bench Seat

: **Junction Block and Wire Harness Connector**

Code	See Page	Junction Block and Wire Harness (Connector Location)
1C	28	Engine Room Main Wire and Driver Side J/B (Lower Finish Panel)
1H	29	Instrument Panel Wire and Driver Side J/B (Lower Finish Panel)
1I		
1J		
DA	34	Instrument Panel Wire and Instrument Panel J/B No.1 (Left Kick Panel)
DB		
PF	36	Instrument Panel Wire and Instrument Panel J/B No.2 (Right Side of Glove Box)

: **Connector Joining Wire Harness and Wire Harness**

Code	See Page	Joining Wire Harness and Wire Harness (Connector Location)
IA2	54	Instrument Panel Wire and Engine Room Main Wire (Left Kick Panel)
IG1	55	Instrument Panel Wire and Instrument Panel Assembly Wire (Behind the Glove Box)
II1	55	Instrument Panel Wire and Instrument Panel Wire (Instrument Panel Brace RH)
IJ1	55	Instrument Panel Wire and Instrument Panel Wire (Right Kick Panel)
IL1	55	Instrument Panel Wire and Floor Wire (Right Kick Panel)
BF2	57 (*2)	Rear Door No.2 Wire and Floor No.2 Wire (Under the Left Quarter Panel)
BG2	57 (*2)	Rear Door No.1 Wire and Floor Wire (Under the Right Quarter Panel)
BH1	60 (*4)	Floor Wire and Seat No.1 Wire (Under the Front Passenger's Seat)
BJ2	61 (*5)	Floor Wire and Seat No.1 Wire (Under the Front Seat RH)
BK1	61 (*5)	Floor No.2 Wire and Seat No.1 Wire (Under the Front Seat LH)
BL1	61 (*5)	Seat No.2 Wire and Seat No.1 Wire (Under the Front Seat LH)

: **Ground Points**

Code	See Page	Ground Points Location
IA	54	Left Kick Panel
IB	54	Instrument Panel Brace LH
IC	54	Instrument Panel Brace RH
IE	54	Right Kick Panel

* 1 : Double Cab * 2 : Access Cab * 3 : Regular Cab * 4 : Separate Seat * 5 : Bench Seat

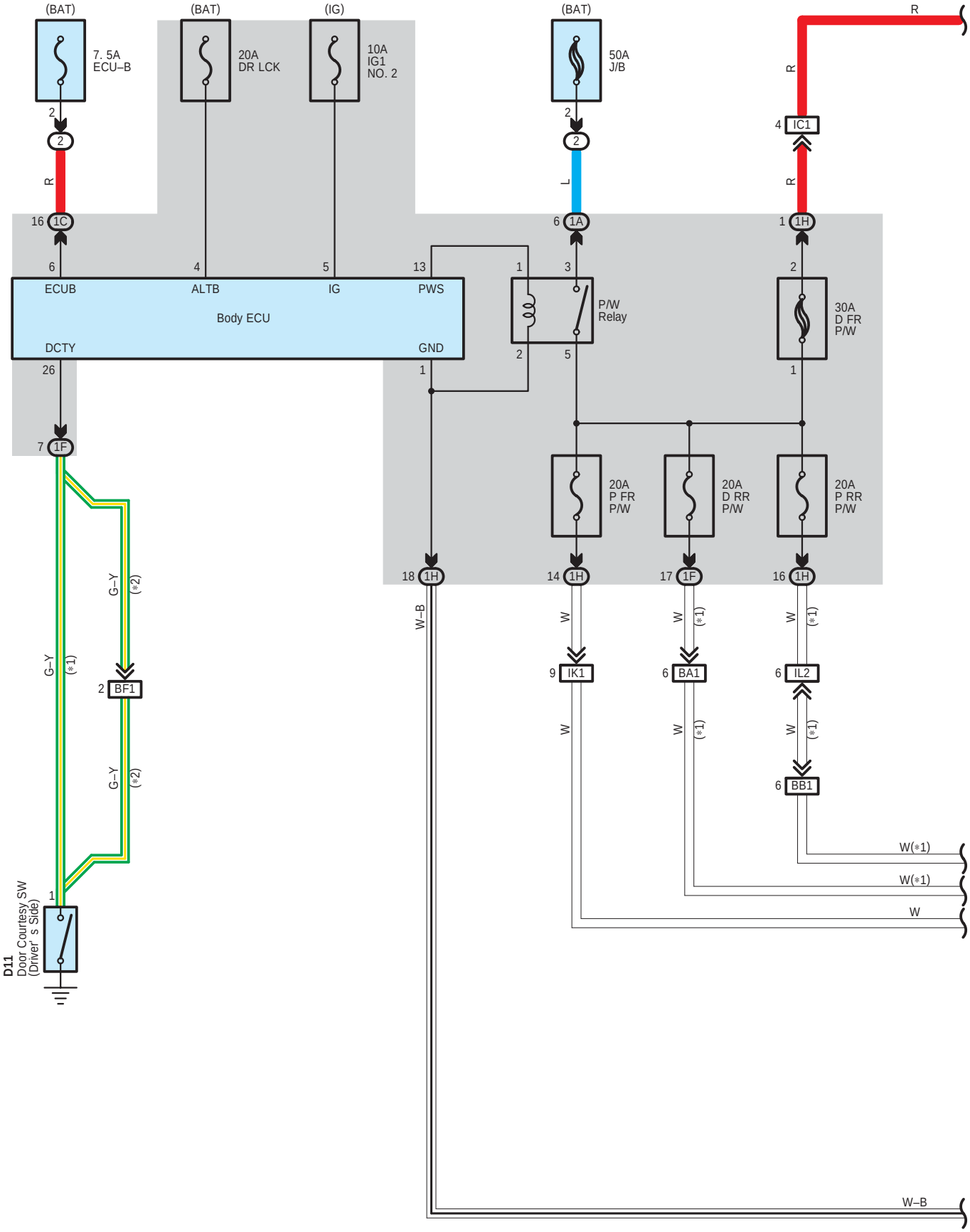
(BAT)
7. 5A
ECU–B
(BAT)
20A
DR LCK
(IG)
10A
IG1
NO. 2
(BAT)
50A
J/B
R
R
R
L
R
2
2
2
2
4
IC1
16
1C
6
1A
1
1H
6
ECUB
4
ALTB
5
IG
13
PWS
1
3
2
5
2
1
Body ECU
P/W
Relay
30A
D FR
P/W
DCTY
GND
26
1
1
7
1F
20A
P FR
P/W
20A
D RR
P/W
20A
P RR
P/W
18
1H
14
1H
17
1F
16
1H
W–B
W
W
W
(*1)
(*1)
(*1)
9
IK1
6
BA1
6
IL2
6
BB1
G–Y
(*1)
G–Y
(*2)
G–Y
(*2)
2
BF1
W(*1)
W(*1)
W
1
D11
Door Courtesy SW
(Driver's Side)
W–B

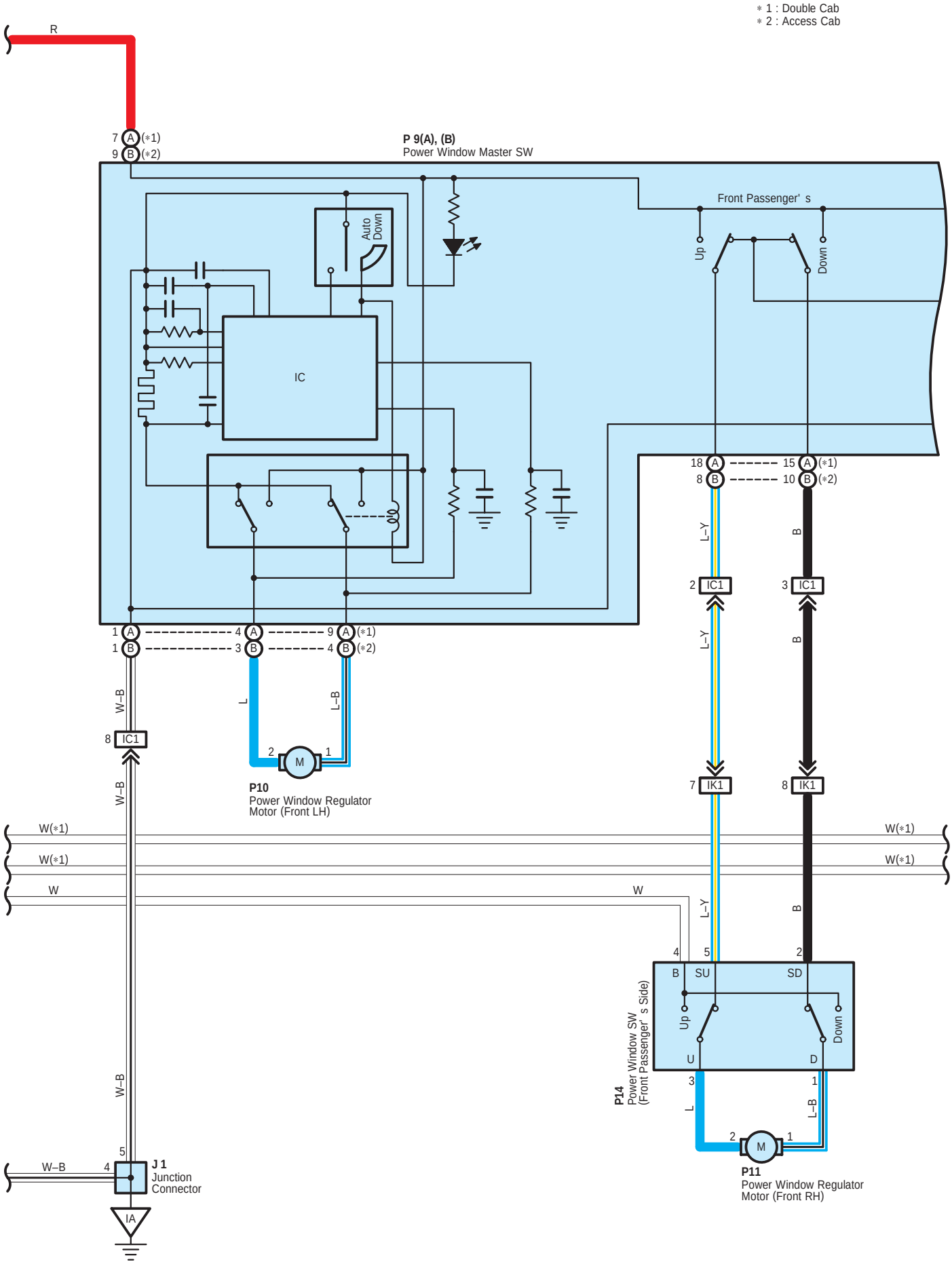
∗1 : Double Cab
∗2 : Access Cab
R
7 A (∗1)
9 B (∗2)
P 9(A), (B)
Power Window Master SW
Auto Down
IC
Front Passenger' s
Up
Down
18 A
8 B
15 A (∗1)
10 B (∗2)
L–Y
B
2 IC1
3 IC1
1 A
1 B
4 A
3 B
9 A (∗1)
4 B (∗2)
W–B
L
L–B
8 IC1
2
M
1
P10
Power Window Regulator
Motor (Front LH)
7 IK1
8 IK1
W(∗1)
W
4
5
2
B
SU
SD
Up
Down
U
D
P14
Power Window SW
(Front Passenger' s Side)
3
1
2
M
1
P11
Power Window Regulator
Motor (Front RH)
5
W–B
4
J 1
Junction
Connector
IA

∗ 1 : Double Cab

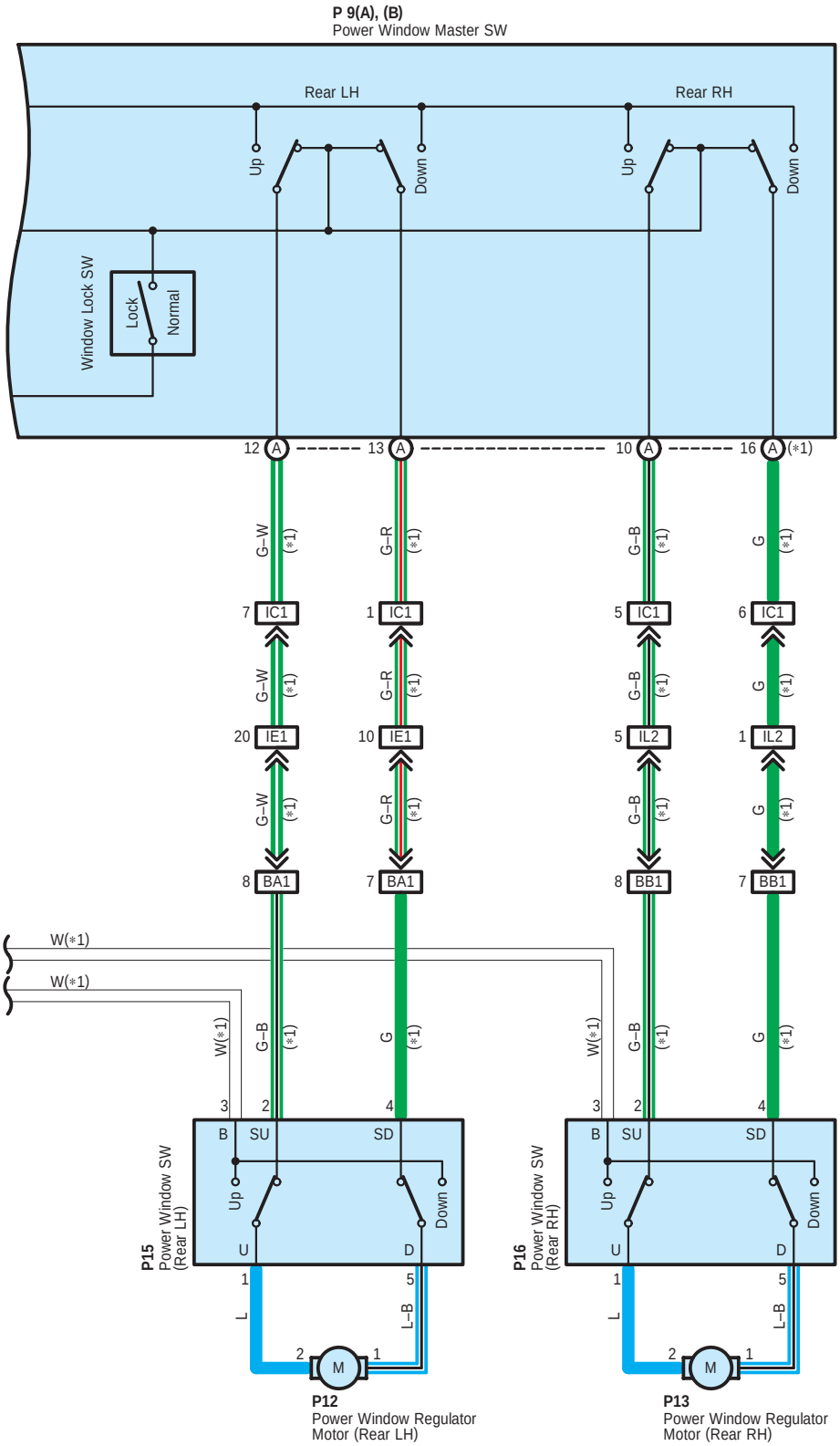
P 9(A), (B)
Power Window Master SW
Rear LH
Rear RH
Up
Down
Window Lock SW
Lock
Normal
12 A
13 A
10 A
16 A (∗1)
G–W (∗1)
G–R (∗1)
G–B (∗1)
G (∗1)
7 IC1
1 IC1
5 IC1
6 IC1
20 IE1
10 IE1
5 IL2
1 IL2
8 BA1
7 BA1
8 BB1
7 BB1
W(∗1)
W(∗1)
3
2
4
B
SU
SD
U
D
P15
Power Window SW
(Rear LH)
P16
Power Window SW
(Rear RH)
1
5
L
L–B
2
M
1
P12
Power Window Regulator
Motor (Rear LH)
P13
Power Window Regulator
Motor (Rear RH)

System Outline

With the ignition SW turned on, current flows through the IG1 NO.2 fuse to TERMINAL 5 of the body ECU to TERMINAL 13 to TERMINAL 1 of the P/W relay to TERMINAL 2 to GROUND, activating the P/W relay, and the current flowing from TERMINAL 3 of the P/W relay flows to TERMINAL 5 to D FR P/W fuse to TERMINAL (A) 7 (Double cab), (B) 9 (Access cab) of the power window master SW, P FR P/W fuse to TERMINAL 4 of the power window SW (Front passenger's side), D RR P/W fuse to TERMINAL 3 of the power window SW (Rear LH), P RR P/W fuse to TERMINAL 3 of the power window SW (Rear RH).

1. Manual Operation (Driver's Window)

With the ignition SW turned on and with the power window master SW (Manual SW) in UP position, the current flowing to TERMINAL (A) 7 (Double cab), (B) 9 (Access cab) of the power window master SW flows to TERMINAL (A) 4 (Double cab), (B) 3 (Access cab) to TERMINAL 2 of the power window regulator motor (Front LH) to TERMINAL 1 to TERMINAL (A) 9 (Double cab), (B) 4 (Access cab) of the master SW to TERMINAL (A) 1 (Double cab), (B) 1 (Access cab) to GROUND and causes the power window regulator motor to rotate in the up direction. The window ascends only while the SW is being pushed.

In down operation, the current flowing from TERMINAL (A) 7 (Double cab), (B) 9 (Access cab) of the power window master SW to TERMINAL (A) 9 (Double cab), (B) 4 (Access cab) flows to TERMINAL 1 of the motor LH to TERMINAL 2 to TERMINAL (A) 4 (Double cab), (B) 3 (Access cab) of the master SW to TERMINAL (A) 1 (Double cab), (B) 1 (Access cab) to GROUND, flowing in the opposite direction to manual up operation, causing the motor to rotate in reverse and lowering the window.

2. Auto Down Operation (Driver's Window)

With the ignition SW on and with the auto SW of the power window master SW in DOWN position, the current flowing to TERMINAL (A) 7 (Double cab), (B) 9 (Access cab) of the master SW flows to TERMINAL (A) 9 (Double cab), (B) 4 (Access cab) of the master SW to TERMINAL 1 of the power window regulator motor (Front LH) to TERMINAL 2 to TERMINAL (A) 4 (Double cab), (B) 3 (Access cab) of the master SW to TERMINAL (A) 1 (Double cab), (B) 1 (Access cab) to GROUND, causing the motor to rotate towards the down side.

Then the solenoid in the master SW is activated and it locks the auto SW being pushed, causing the motor to continue to rotate in auto down operation.

When the window has completely descended, the current flowing between TERMINAL (A) 4 (Double cab), (B) 3 (Access cab) of the master SW and TERMINAL (A) 1 (Double cab), (B) 1 (Access cab) increases. As a result, the solenoid stops operating, the auto SW turns off and the flowing from TERMINAL (A) 7 (Double cab), (B) 9 (Access cab) of the master SW to TERMINAL (A) 9 (Double cab), (B) 4 (Access cab) is cut off, stopping the motor so that auto stop occurs.

3. Stopping of Auto Down at Driver's Window

When the manual SW (Driver's) is pushed to the up side during auto down operation, a ground circuit opens in the master SW and current does not flow from TERMINAL (A) 4 (Double cab), (B) 3 (Access cab) of the master SW to TERMINAL (A) 1 (Double cab), (B) 1 (Access cab), so the motor stops, causing auto down operation to stop. If the manual SW is pushed continuously, the motor rotates in the up direction in manual up operation.

4. Manual Operation by Power Window Control SW (Front RH Window)

With the power window SW (Front passenger's side) is pushed to the up side, the current flowing from TERMINAL 4 of the power window SW (Front passenger's side) flows to TERMINAL 3 to TERMINAL 2 of the power window regulator motor (Front RH) to TERMINAL 1 to TERMINAL 1 of the power window SW (Front passenger's side) to TERMINAL 2 to TERMINAL (A) 15 (Double cab), (B) 10 (Access cab) of the master SW to TERMINAL (A) 1 (Double cab), (B) 1 (Access cab) to GROUND. This causes the power window regulator motor (Front RH) to rotate in the up direction. Up operation is continuous only while the power window control SW RH is pushed to the up side. When the window descends, the current flowing to the motor flows in the opposite direction, from TERMINAL 1 to TERMINAL 2, and the motor rotates in revers.

When the window lock SW is pushed to the lock side, the ground circuit to the front RH window becomes open. As a result, even if Open/Close operation of the front RH window is tried, the current from TERMINAL (A) 1 (Double cab), (B) 1 (Access cab) of the power window master SW is not grounded and the motor does not rotate, so the front RH window can not be operated and window lock occurs.

5. Manual Operation (Rear LH, RH Window) [Double Cab]

With the power window SW (Rear LH, RH) pulled to the up side, the current flowing from TERMINAL 3 of the power window SW flows to TERMINAL 1 to TERMINAL 2 of the power window regulator motor to TERMINAL 1 to TERMINAL 5 of the power window SW to TERMINAL 4 to TERMINAL (A) 13 (LH) or (A) 16 (RH) of the master SW to TERMINAL (A) 1 to GROUND and causes the power window regulator motor (Rear LH, RH) to rotate in the up direction. The up operation continues only while the power window control SW is pulled to the up side. When the window descends, the current flowing to the motor flows in the opposite direction, from TERMINAL 2 to TERMINAL 1, and the motor rotates in reverse. When the window lock SW is pushed to the lock side, the ground circuit to the rear LH, RH window becomes open.

As a result, even if Open/Close operation of the rear LH, RH window is tried, the current from TERMINAL (A) 1 of the power window master SW is not grounded and the motor does not rotate, so the rear LH, RH window can not be operated and window lock occurs.

6. Key Off Power Window Operation

With the ignition SW turned from on to off, the body ECU operates for about 45 seconds and current flows from TERMINAL 1 of the P/W relay to TERMINAL 2 to GROUND. For this period, current also flows TERMINAL 1 to TERMINAL 2. This current flows to TERMINAL (A) 7 (Double cab), (B) 9 (Access cab) of the power window master SW and to TERMINAL 4 (Front RH), 3 (Rear) of the power window SW. As a result, for about approx. 43 seconds after the ignition SW is turned off, it is possible to raise and lower the power window by the functioning of the body ECU. Also, by opening the door (Door courtesy SW on) within about 45 seconds after turning the ignition SW to off, a signal is input to the body ECU. As a result, the body ECU turns off, and up and down movement of the window stops.

○ : Parts Location

Code		See Page	Code	See Page	Code	See Page
D11		46 (*1)	P10	47 (*1)	P13	47 (*1)
		48 (*2)		48 (*2)	P14	47 (*1)
J1		45	P11	47 (*1)		48 (*2)
P9	A	47 (*1)		48 (*2)	P15	47 (*1)
	B	48 (*2)	P12	47 (*1)	P16	47 (*1)

⬭ : Relay Blocks

Code	See Page	Relay Blocks (Relay Block Location)
2	24	Engine Room R/B (Engine Compartment Left)

⬭ : Junction Block and Wire Harness Connector

Code	See Page	Junction Block and Wire Harness (Connector Location)
1A	28	Engine Room Main Wire and Driver Side J/B (Lower Finish Panel)
1C		
1F	28	Floor No.2 Wire and Driver Side J/B (Lower Finish Panel)
1H	29	Instrument Panel Wire and Driver Side J/B (Lower Finish Panel)

▭ : Connector Joining Wire Harness and Wire Harness

Code	See Page	Joining Wire Harness and Wire Harness (Connector Location)
IC1	54	Front Door LH Wire and Instrument Panel Wire (Left Kick Panel)
IE1	54	Instrument Panel Wire and Floor No.2 Wire (Left Kick Panel)
IK1	55	Front Door RH Wire and Instrument Panel Wire (Right Kick Panel)
IL2	55	Instrument Panel Wire and Floor Wire (Right Kick Panel)
BA1	56 (*1)	Rear Door No.2 Wire and Floor No.2 Wire (Under the Left Center Pillar)
BB1	56 (*1)	Rear Door No.1 Wire and Floor Wire (Under the Right Center Pillar)
BF1	57 (*2)	Rear Door No.2 Wire and Floor No.2 Wire (Under the Left Quarter Panel)

▽ : Ground Points

Code	See Page	Ground Points Location
IA	54	Left Kick Panel

* 1 : Double Cab * 2 : Access Cab * 3 : Regular Cab * 4 : Separate Seat * 5 : Bench Seat

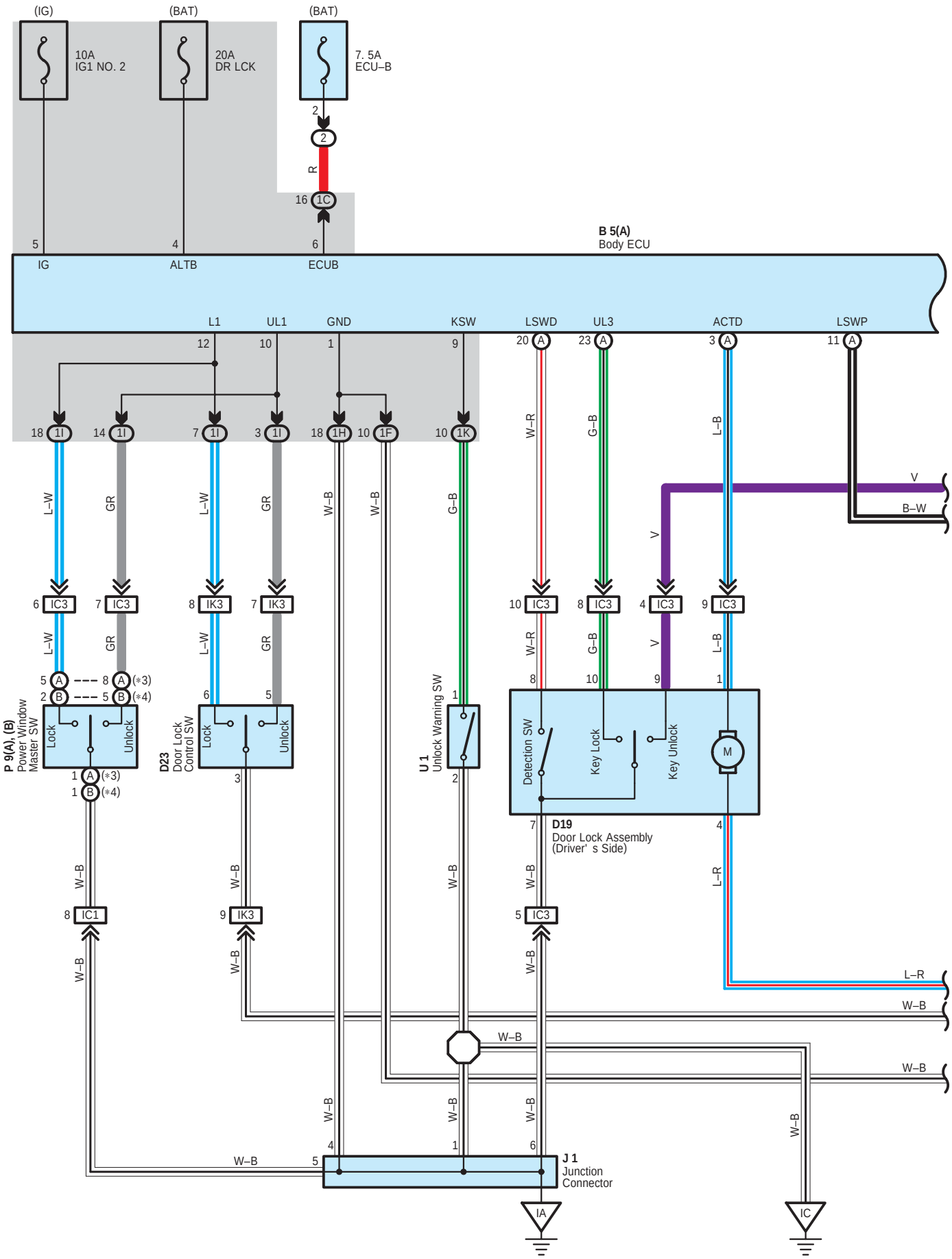
(IG)
(BAT)
(BAT)
10A
IG1 NO. 2
20A
DR LCK
7. 5A
ECU–B
B 5(A)
Body ECU
IG
ALTB
ECUB
L1
UL1
GND
KSW
LSWD
UL3
ACTD
LSWP
P 9(A), (B)
Power Window
Master SW
Lock
Unlock
D23
Door Lock
Control SW
U 1
Unlock Warning SW
Detection SW
Key Lock
Key Unlock
D19
Door Lock Assembly
(Driver' s Side)
J 1
Junction
Connector
IA
IC

＊3 : Double Cab
＊4 : Access Cab
＊5 : Separate Seat
＊6 : Bench Seat

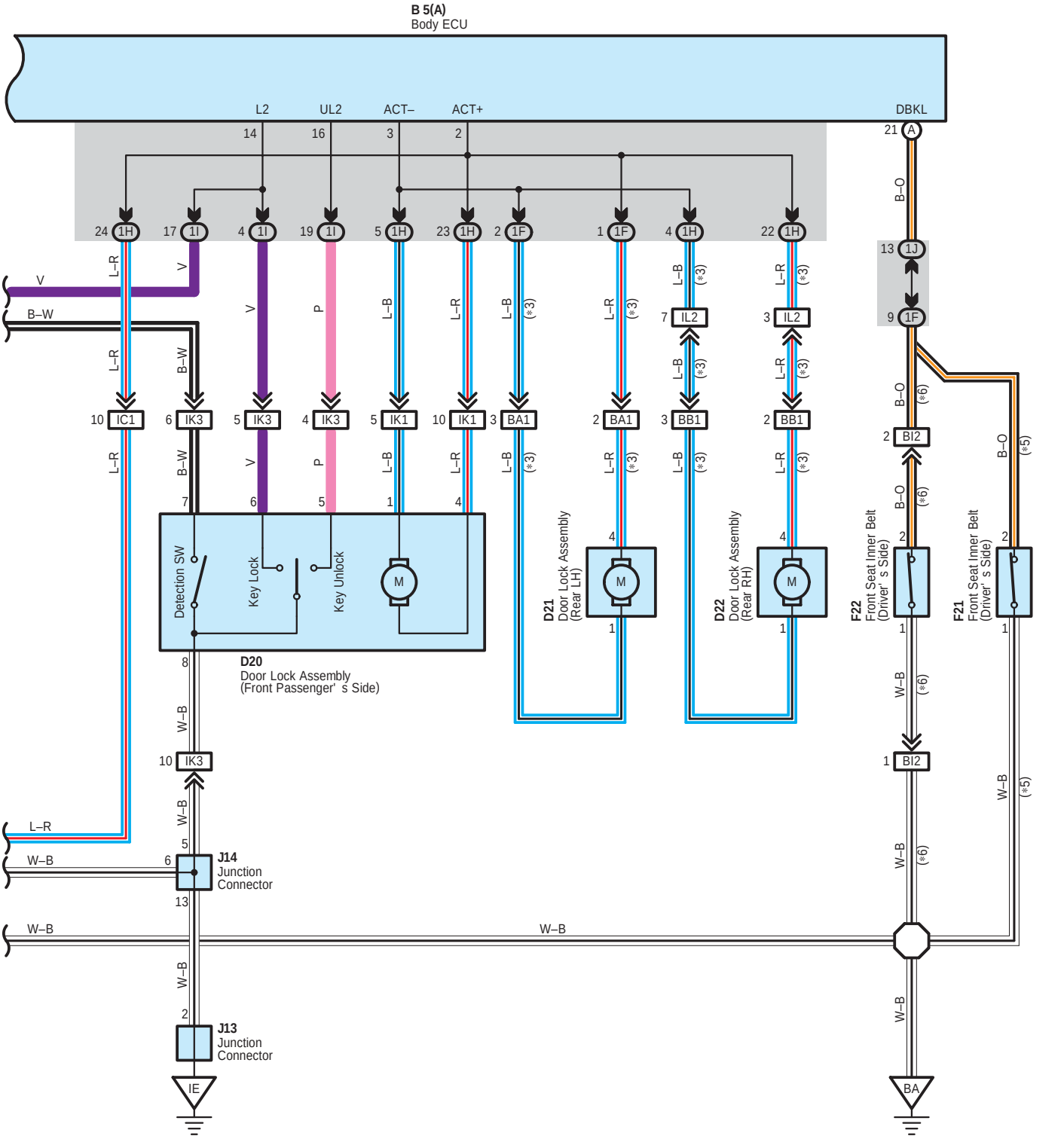

Door Lock Control

System Outline

1. Manual Unlock Operation

When the door lock control SW of the driver's or passenger's side door is pushed to UNLOCK, the door lock will unlock.

2. Manual Lock Operation

When the door lock control SW of the driver's or passenger's side door is pushed to LOCK, the door lock will lock.

3. Door Key Unlock Operation

* Unlock operation from driver's side door

When the driver's side door is unlocked once using the ignition key, only the driver's side door is unlocked. If this operation is repeated within 3 seconds, all the other doors are unlocked.

* Unlock operation from front passenger's side door

When the front passenger's side door is unlocked using the ignition key, all the other doors are unlocked, too.

: Parts Location

Code	See Page	Code	See Page	Code	See Page
B5 A	44	D22	46 (*1)	J13	45
D19	46 (*1)	D23	46 (*1)	J14	45
	48 (*2)		48 (*2)	P9 A	47 (*1)
D20	46 (*1)	F21	50 (*4)	P9 B	48 (*2)
	48 (*2)	F22	51 (*5)	U1	45
D21	46 (*1)	J1	45		

: Relay Blocks

Code	See Page	Relay Blocks (Relay Block Location)
2	24	Engine Room R/B (Engine Compartment Left)

: Junction Block and Wire Harness Connector

Code	See Page	Junction Block and Wire Harness (Connector Location)
1C	28	Engine Room Main Wire and Driver Side J/B (Lower Finish Panel)
1F	28	Floor No.2 Wire and Driver Side J/B (Lower Finish Panel)
1H	29	Instrument Panel Wire and Driver Side J/B (Lower Finish Panel)
1I		
1J		
1K		

: Connector Joining Wire Harness and Wire Harness

Code	See Page	Joining Wire Harness and Wire Harness (Connector Location)
IC1	54	Front Door LH Wire and Instrument Panel Wire (Left Kick Panel)
IC3		
IK1	55	Front Door RH Wire and Instrument Panel Wire (Right Kick Panel)
IK3		
IL2	55	Instrument Panel Wire and Floor Wire (Right Kick Panel)
BA1	56 (*1)	Rear Door No.2 Wire and Floor No.2 Wire (Under the Left Center Pillar)
BB1	56 (*1)	Rear Door No.1 Wire and Floor Wire (Under the Right Center Pillar)
BI2	61 (*5)	Floor No.2 Wire and Seat No.1 Wire (Under the Front Seat LH)

: Ground Points

Code	See Page	Ground Points Location
IA	54	Left Kick Panel
IC	54	Instrument Panel Brace RH
IE	54	Right Kick Panel
BA	56 (*1)	Floor Seat Cross Member LH
	57 (*2)	

* 1 : Double Cab * 2 : Access Cab * 3 : Regular Cab * 4 : Separate Seat * 5 : Bench Seat

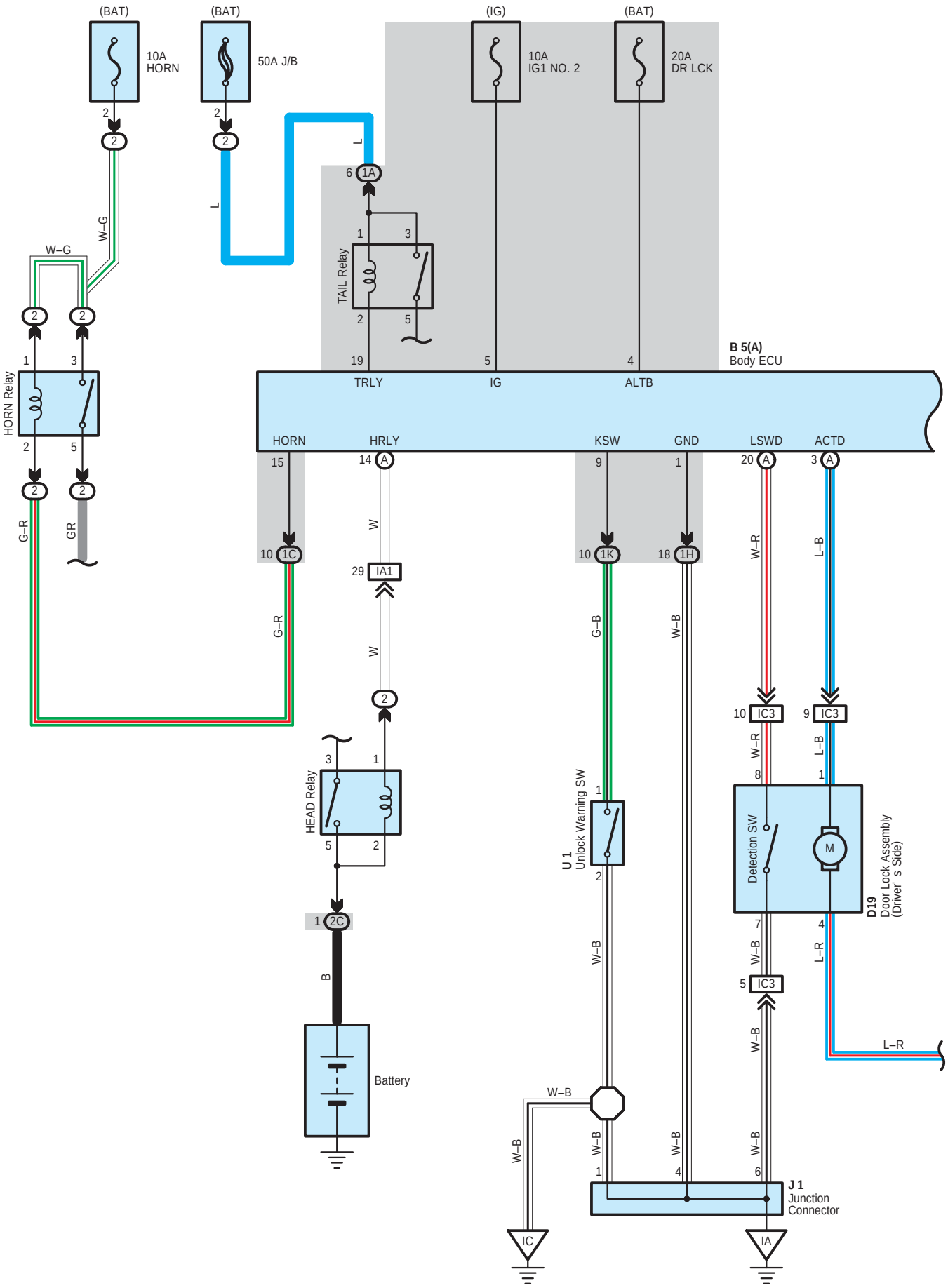
(BAT)
10A
HORN
(BAT)
50A J/B
(IG)
10A
IG1 NO. 2
(BAT)
20A
DR LCK
TAIL Relay
HORN Relay
HEAD Relay
B 5(A)
Body ECU
TRLY
IG
ALTB
HORN
HRLY
KSW
GND
LSWD
ACTD
U 1
Unlock Warning SW
D19
Door Lock Assembly
(Driver' s Side)
Detection SW
J 1
Junction
Connector
Battery
IC
IA
W–G
G–R
G–B
W–B
W–R
L–B
L–R
L

∗ 1 : Double Cab
∗ 2 : Access Cab

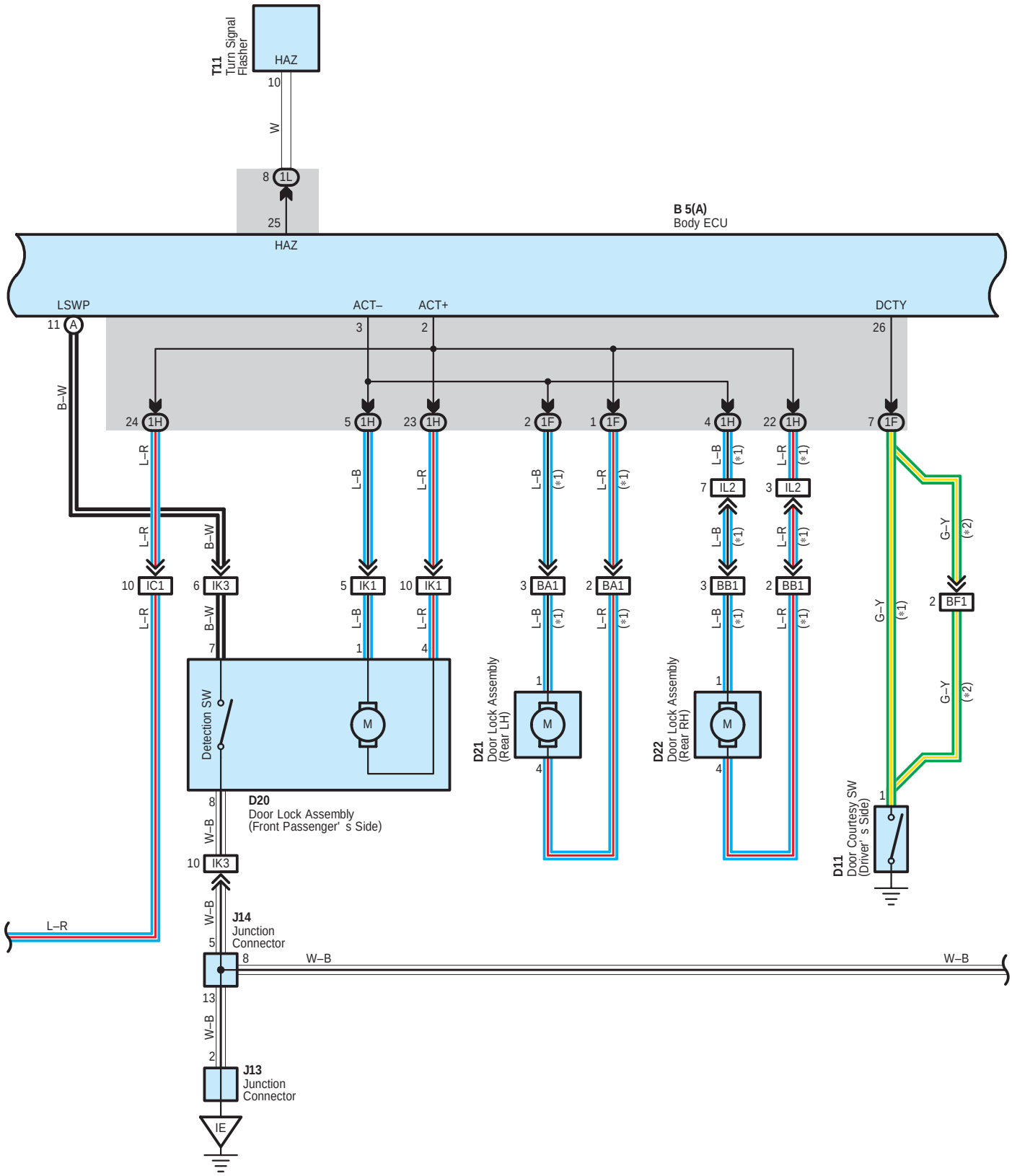

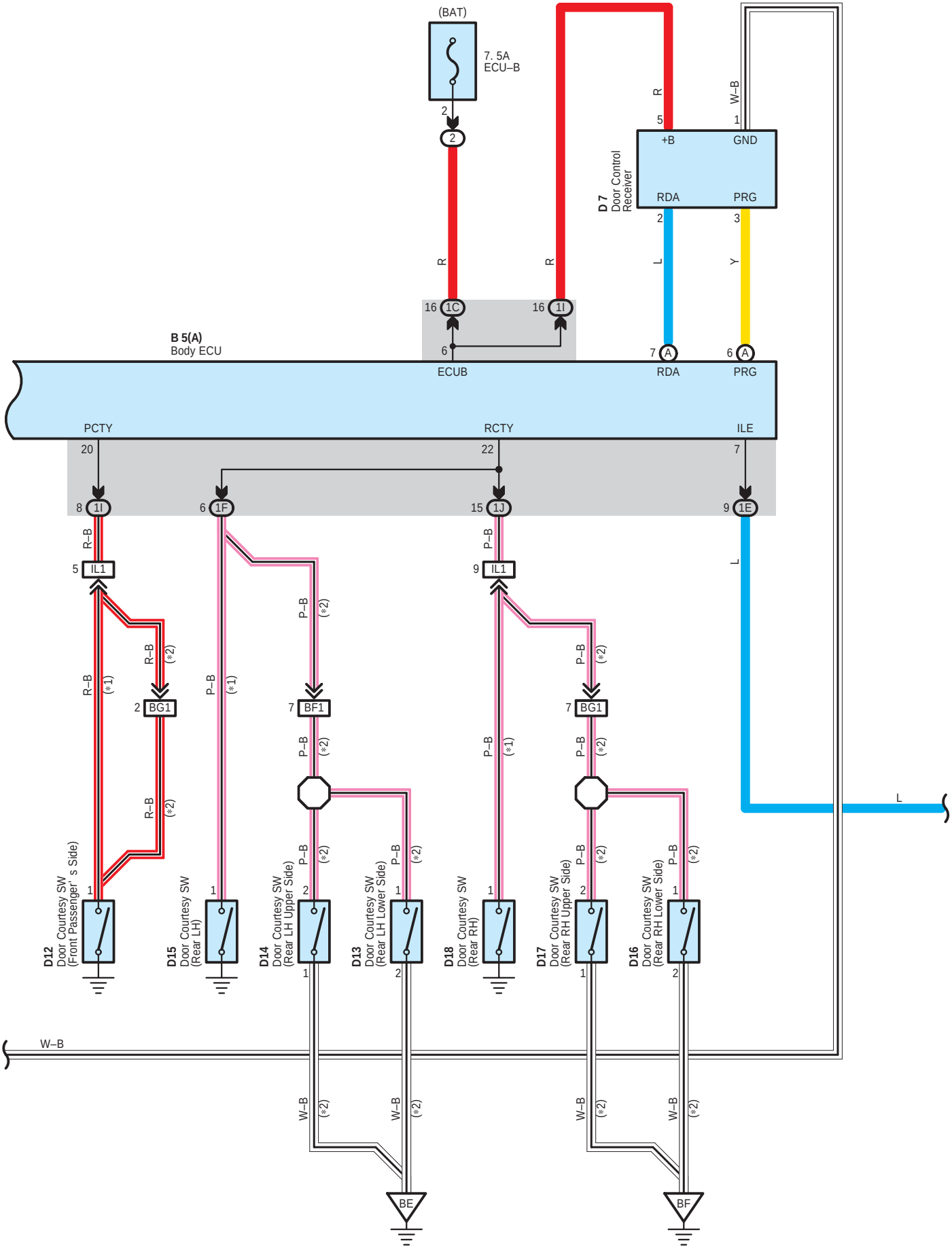
(BAT)
7. 5A
ECU–B
2
2
R
16 1C
6
ECUB
R
16 1I
R
5
+B
W–B
1
GND
D 7
Door Control
Receiver
RDA
PRG
2
3
L
Y
7 A
RDA
6 A
PRG
B 5(A)
Body ECU
PCTY
20
8 1I
RCTY
22
6 1F
15 1J
ILE
7
9 1E
R–B
5 IL1
P–B
9 IL1
L
R–B (*1)
R–B (*2)
R–B (*2)
2 BG1
P–B (*1)
P–B (*2)
7 BF1
P–B (*1)
P–B (*2)
7 BG1
P–B (*2)
P–B (*2)
L
D12
Door Courtesy SW
(Front Passenger' s Side)
D15
Door Courtesy SW
(Rear LH)
D14
Door Courtesy SW
(Rear LH Upper Side)
D13
Door Courtesy SW
(Rear LH Lower Side)
D18
Door Courtesy SW
(Rear RH)
D17
Door Courtesy SW
(Rear RH Upper Side)
D16
Door Courtesy SW
(Rear RH Lower Side)
W–B
W–B (*2)
W–B (*2)
W–B (*2)
W–B (*2)
BE
BF

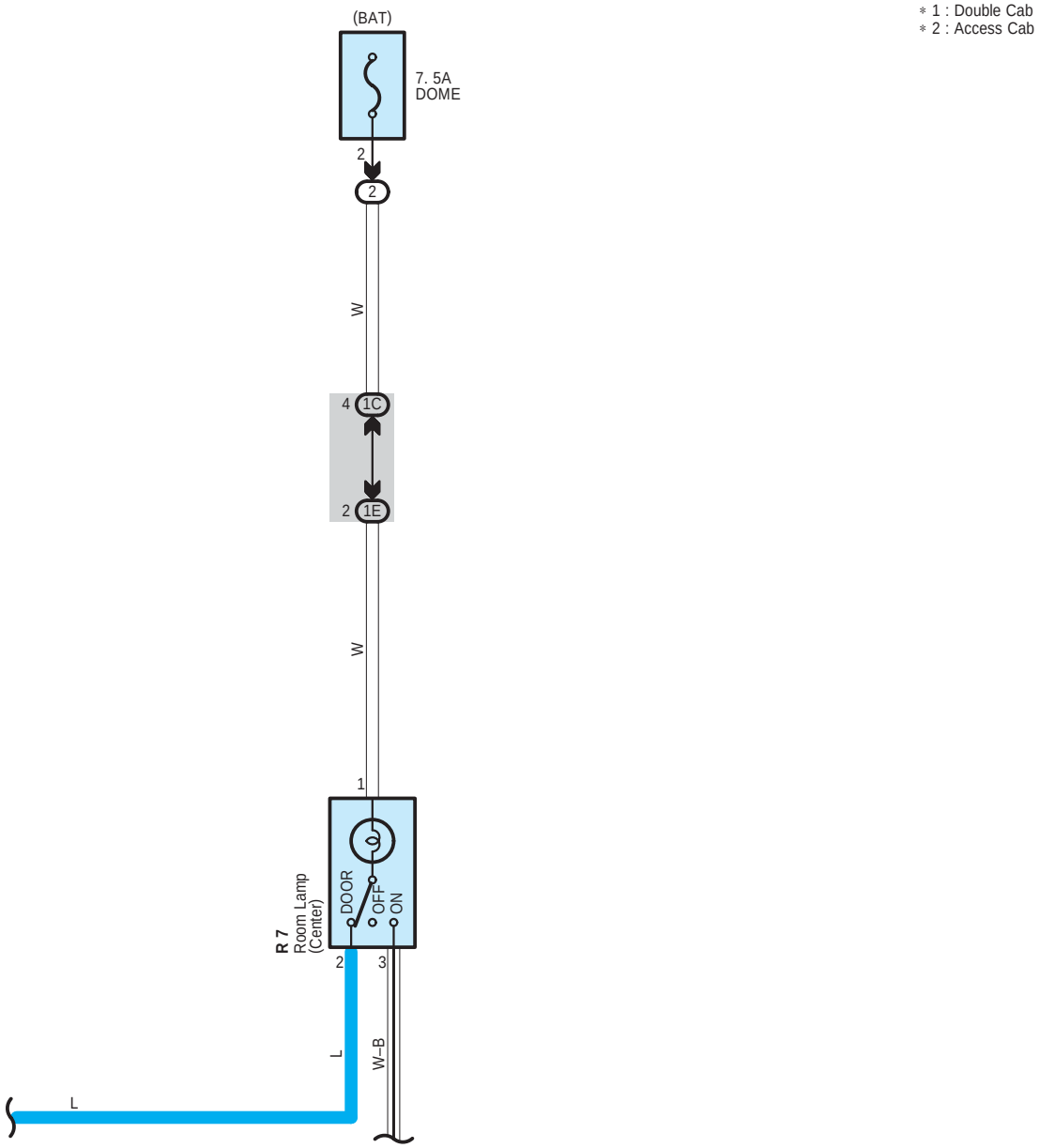

∗ 1 : Double Cab
∗ 2 : Access Cab

Wireless Door Lock Control

System Outline

Door lock control (Lock and unlock) and panic control (Theft alarm and flash) is performed by remote control, without the ignition key inserted in the door key cylinder, using low–power electrical waves emitted by a transmitter.

1. Normal Operation

* Lock operation
  When the lock SW on the transmitter is pressed, all the doors are locked.
* Unlock operation
  When the unlock SW on the transmitter is pressed once, only the driver door is unlocked. When the unlock SW is pressed again within 3 seconds, all the doors are unlocked.

2. Auto Lock Function

When the door is not actually opened within 30 seconds after the door has been unlocked by the unlock SW on the transmitter, all the doors are automatically locked. If any of the following conditions are detected, the wireless door lock does not function.

* Any door is opened.
* The ignition key is inserted into the ignition SW.
* When the lock detection SW of all the doors are locked.

3. Wireless Door Lock Stop Function

If any of the following conditions are detected, the wireless door lock does not function.
Lock operation

* When any door is open (Door courtesy SW on)
* The ignition key is inserted into the ignition SW (Unlock warning SW on)
* Ignition SW is on

Unlock operation

* Ignition SW is on

4. Visual Confirmation of Lock or Unlock

During lock operation, when the body ECU receives a lock signal from the door lock detection SW, the turn signal light is flashed once. During unlock operation, when the body ECU receives an unlock signal from the door lock detection SW, the turn signal light is flashed twice.

5. Remote Panic Operation

Panic will function when doors are locked or unlocked, open or closed. When the panic button (Transmitter) is pushed once, interior lights light up, and theft alarm and horn sounds and turn signal light, headlights and taillight flash. Then, the panic or the unlock button (Transmitter) is pushed once more, interior lights are turned off, sounding and flashing will stop. Panic will not function when ignition key is in ignition key cylinder.

6. Repeat Function

If the lock detection signal in response to the output signal is not received after the body ECU has output the lock signal, the lock signal is output again.

7. Illuminated Entry Function

When the body ECU detects the unlock state after the unlock operation has been made, it turns on the lights, such as the interior light for approx. 15 sec. If all the doors are locked during this operation, lighting is cancelled and the lights immediately fade out.

○ : Parts Location

Code	See Page	Code	See Page	Code	See Page
B5 A	44	D16	48 (*2)	J1	45
D7	44	D17	48 (*2)	J13	45
D11	46 (*1)	D18	46 (*1)	J14	45
	48 (*2)	D19	46 (*1)	R7	47 (*1)
D12	46 (*1)		48 (*2)		48 (*2)
	48 (*2)	D20	46 (*1)	T11	45
D13	48 (*2)		48 (*2)	U1	45
D14	48 (*2)	D21	46 (*1)		
D15	46 (*1)	D22	46 (*1)		

* 1 : Double Cab * 2 : Access Cab * 3 : Regular Cab * 4 : Separate Seat * 5 : Bench Seat

: Relay Blocks

Code	See Page	Relay Blocks (Relay Block Location)
2	24	Engine Room R/B (Engine Compartment Left)

: Junction Block and Wire Harness Connector

Code	See Page	Junction Block and Wire Harness (Connector Location)
1A	28	Engine Room Main Wire and Driver Side J/B (Lower Finish Panel)
1C		
1E	28	Roof Wire and Driver Side J/B (Lower Finish Panel)
1F	28	Floor No.2 Wire and Driver Side J/B (Lower Finish Panel)
1H	29	Instrument Panel Wire and Driver Side J/B (Lower Finish Panel)
1I		
1J		
1K		
1L	29	Relay Wire and Driver Side J/B (Lower Finish Panel)
2C	24	Engine Room Main Wire and Engine Room J/B (Engine Compartment Left)

: Connector Joining Wire Harness and Wire Harness

Code	See Page	Joining Wire Harness and Wire Harness (Connector Location)
IA1	54	Instrument Panel Wire and Engine Room Main Wire (Left Kick Panel)
IC1	54	Front Door LH Wire and Instrument Panel Wire (Left Kick Panel)
IC3		
IK1	55	Front Door RH Wire and Instrument Panel Wire (Right Kick Panel)
IK3		
IL1	55	Instrument Panel Wire and Floor Wire (Right Kick Panel)
IL2		
BA1	56 (*1)	Rear Door No.2 Wire and Floor No.2 Wire (Under the Left Center Pillar)
BB1	56 (*1)	Rear Door No.1 Wire and Floor Wire (Under the Right Center Pillar)
BF1	57 (*2)	Rear Door No.2 Wire and Floor No.2 Wire (Under the Left Quarter Panel)
BG1	57 (*2)	Rear Door No.1 Wire and Floor Wire (Under the Right Quarter Panel)

: Ground Points

Code	See Page	Ground Points Location
IA	54	Left Kick Panel
IC	54	Instrument Panel Brace RH
IE	54	Right Kick Panel
BE	57 (*2)	Inside of the Access Door LH
BF	57 (*2)	Inside of the Access Door RH

* 1 : Double Cab * 2 : Access Cab * 3 : Regular Cab * 4 : Separate Seat * 5 : Bench Seat

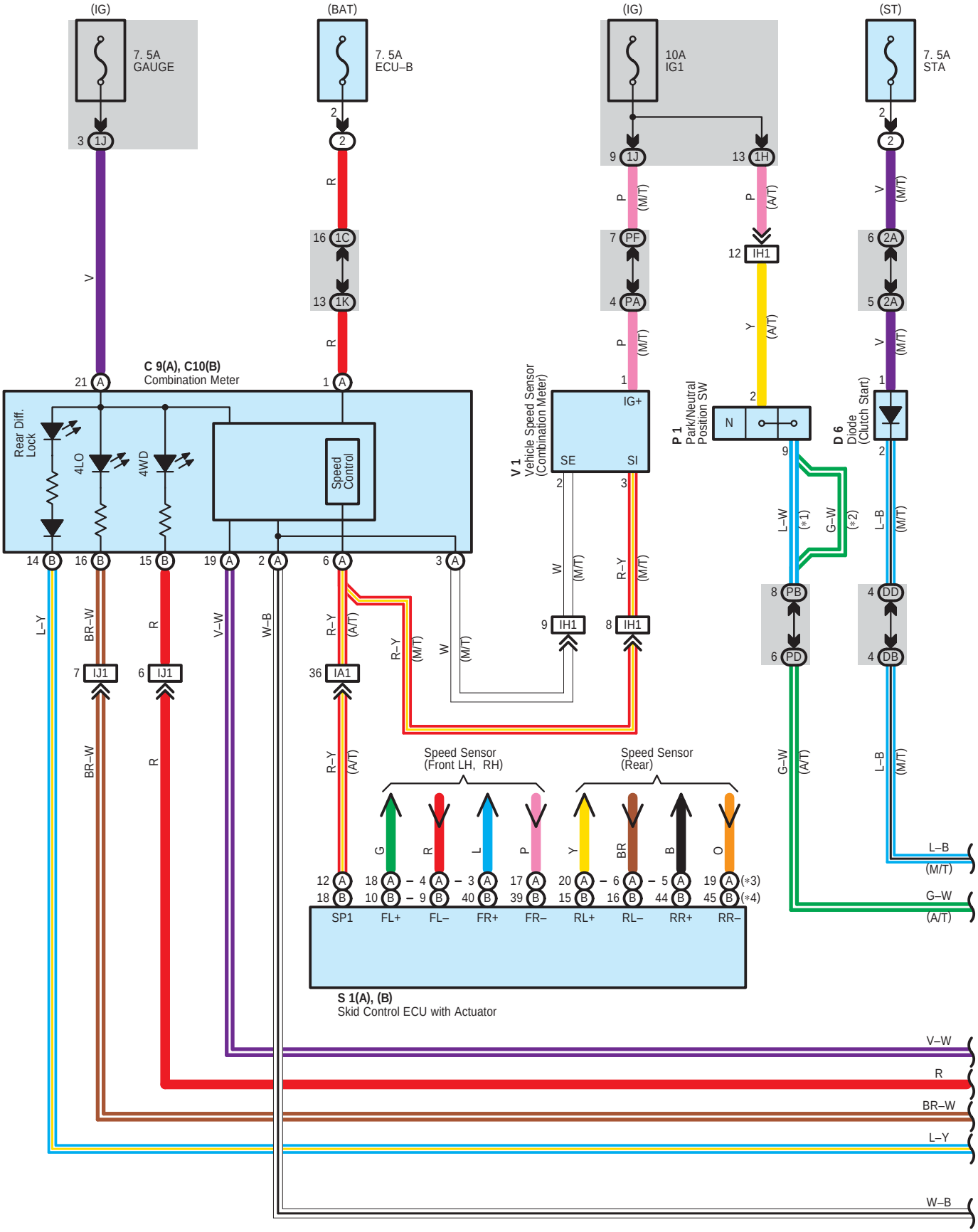
(IG)
7. 5A
GAUGE
3 1J
(BAT)
7. 5A
ECU–B
2
2
R
16 1C
13 1K
R
1 A
(IG)
10A
IG1
9 1J
13 1H
P
(M/T)
P
(A/T)
7 PF
4 PA
P
(M/T)
12 IH1
Y
(A/T)
(ST)
7. 5A
STA
2
2
V
(M/T)
6 2A
5 2A
V
(M/T)
V
21 A
C 9(A), C10(B)
Combination Meter
Rear Diff.
Lock
4LO
4WD
Speed
Control
V 1
Vehicle Speed Sensor
(Combination Meter)
IG+
SE
SI
2
3
P 1
Park/Neutral
Position SW
N
2
9
D 6
Diode
(Clutch Start)
1
2
L–W
(*1)
G–W
(*2)
L–B
(M/T)
14 B
16 B
15 B
19 A
2 A
6 A
3 A
W
(M/T)
R–Y
(M/T)
9 IH1
8 IH1
8 PB
6 PD
4 DD
4 DB
L–Y
BR–W
R
V–W
W–B
R–Y
(A/T)
7 IJ1
6 IJ1
36 IA1
R–Y
(M/T)
W
(M/T)
G–W
(A/T)
L–B
(M/T)
BR–W
R
R–Y
(A/T)
Speed Sensor
(Front LH, RH)
Speed Sensor
(Rear)
G
R
L
P
Y
BR
B
O
12 A
18 B
18 A
10 B
4 A
9 B
3 A
40 B
17 A
39 B
20 A
15 B
6 A
16 B
5 A
44 B
19 A
45 B
(*3)
(*4)
SP1
FL+
FL–
FR+
FR–
RL+
RL–
RR+
RR–
S 1(A), (B)
Skid Control ECU with Actuator
L–B
(M/T)
G–W
(A/T)
V–W
R
BR–W
L–Y
W–B

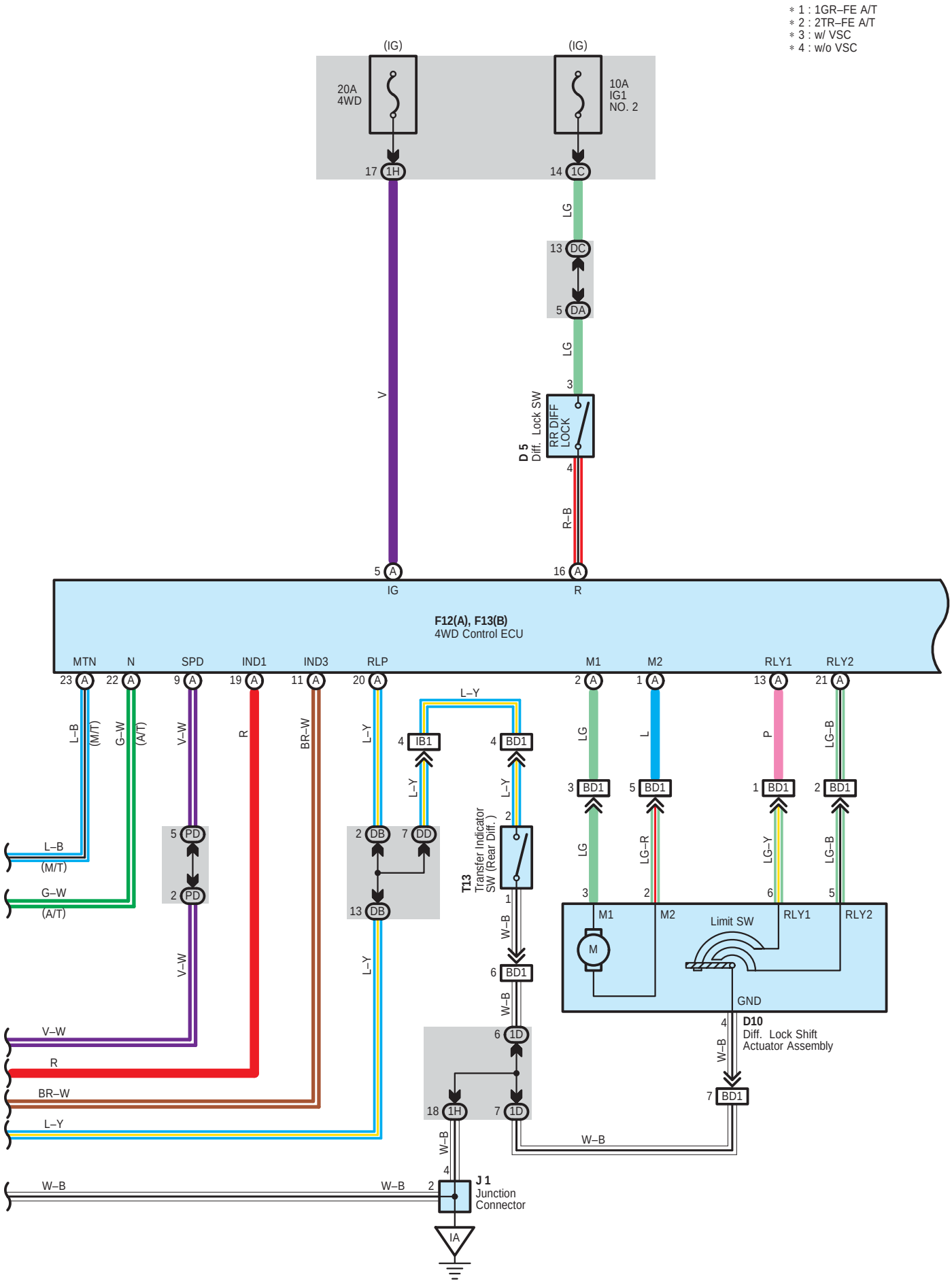
* 1 : 1GR–FE A/T
* 2 : 2TR–FE A/T
* 3 : w/ VSC
* 4 : w/o VSC
(IG)
20A
4WD
17 1H
(IG)
10A
IG1
NO. 2
14 1C
LG
13 DC
5 DA
LG
3
D 5
Diff. Lock SW
RR DIFF
LOCK
4
R–B
V
5 A
IG
16 A
R
F12(A), F13(B)
4WD Control ECU
MTN
N
SPD
IND1
IND3
RLP
M1
M2
RLY1
RLY2
23 A
22 A
9 A
19 A
11 A
20 A
2 A
1 A
13 A
21 A
L–B
(M/T)
G–W
(A/T)
V–W
R
BR–W
L–Y
L–B
(M/T)
G–W
(A/T)
5 PD
2 PD
V–W
V–W
R
BR–W
L–Y
L–Y
4 IB1
L–Y
2 DB
7 DD
13 DB
L–Y
L–Y
4 BD1
L–Y
T13
Transfer Indicator
SW (Rear Diff.)
2
1
W–B
6 BD1
W–B
6 1D
18 1H
7 1D
W–B
W–B
4
W–B
2
J 1
Junction
Connector
IA
LG
3 BD1
LG
3
L
5 BD1
LG–R
2
P
1 BD1
LG–Y
6
LG–B
2 BD1
LG–B
5
M1
M2
Limit SW
RLY1
RLY2
M
GND
4
W–B
7 BD1
D10
Diff. Lock Shift
Actuator Assembly

∗ 5 : w/ ADD

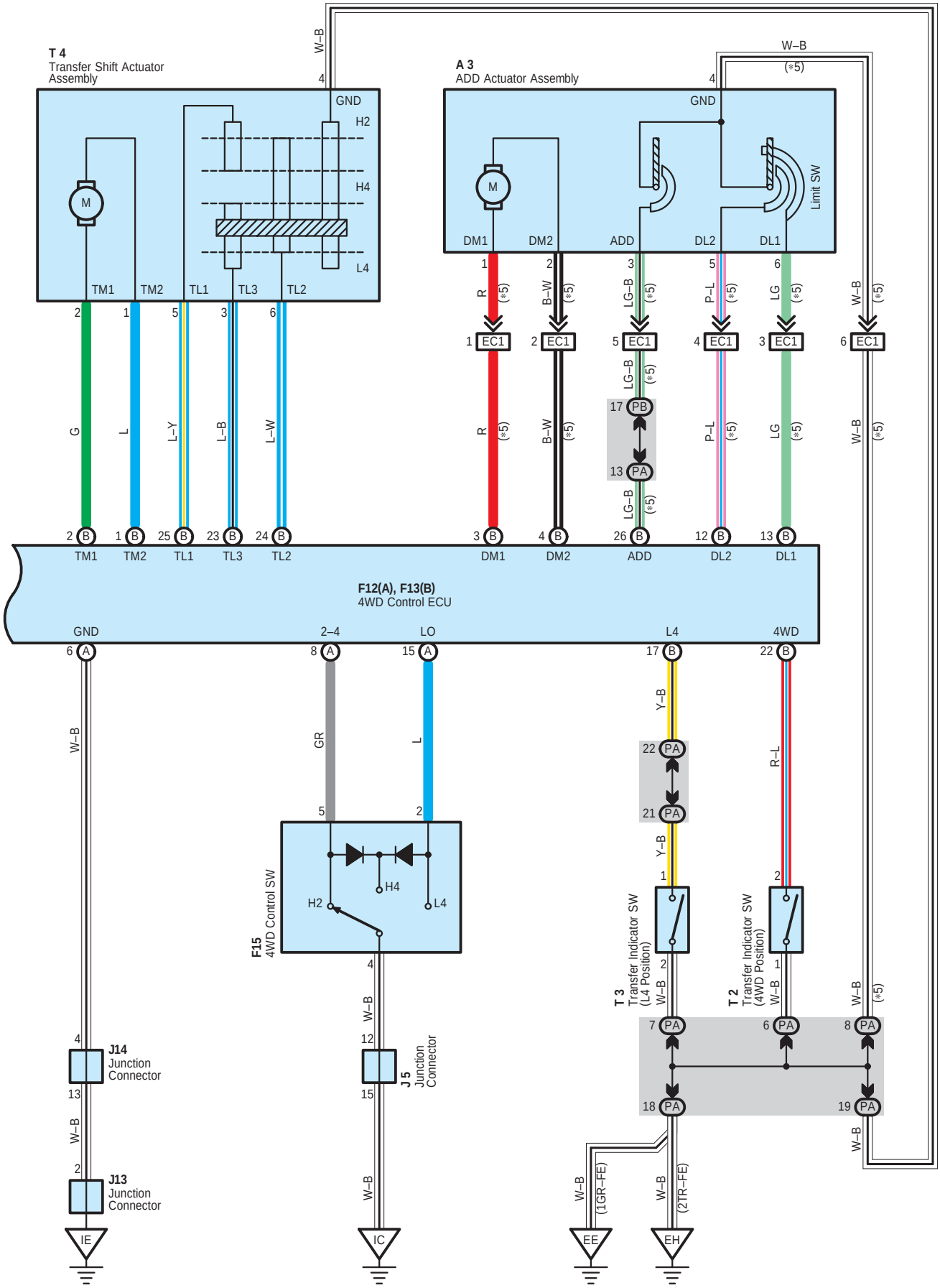
T 4
Transfer Shift Actuator Assembly
A 3
ADD Actuator Assembly
W–B
(∗5)
GND
H2
H4
L4
M
TM1
TM2
TL1
TL3
TL2
DM1
DM2
ADD
DL2
DL1
Limit SW
G
L
L–Y
L–B
L–W
R
B–W
LG–B
P–L
LG
EC1
PB
PA
F12(A), F13(B)
4WD Control ECU
2–4
LO
L4
4WD
GR
Y–B
R–L
F15
4WD Control SW
T 3
Transfer Indicator SW (L4 Position)
T 2
Transfer Indicator SW (4WD Position)
J14
Junction Connector
J13
Junction Connector
J5
Junction Connector
IE
IC
EE
EH
(1GR–FE)
(2TR–FE)

System Outline

Depending on the transfer shift actuator status and ADD actuator status, the 4WD control ECU drives the transfer shift actuator and ADD actuator to electrically change the gear position selected by the driver according to vehicle speed signal and neutral start switch signal.

1. Shift Select Control

Shifting from H2 into H4 position

When the 4WD control switch is turned from H2 into H4, this signal is input into 4WD control ECU (TERMINAL 2–4). Then, the 4WD control ECU moves the 2–4 select motor (TERMINAL 2, TERMINAL 1) in the transfer shift actuator assembly until the shift fork shaft shifts to the diff. free position, performing a shift into H4 position

Shifting from H4 into L4 position

When the 4WD control switch is turned from H4 into L4, this signal is input into 4WD control ECU (TERMINAL LO). Then, the 4WD control ECU drives the 2–4 select motor (TERMINAL 2, TERMINAL 1) in the transfer shift actuator assembly, shifting the shift fork shaft, performing a shift into L4 position.

Switching diff. lock ON when in L4 position.

When the diff. lock switch is turned ON with the 4WD control switch in L4 position, this signal is input into the 4WD control ECU (TERMINAL R). Then, the 4WD control ECU drives the diff. lock shift actuator (TERMINAL 2, TERMINAL 3) in the diff. lock shift actuator assembly until the shift fork shaft shifts to the diff. lock position, locking it in L4 position with the diff. lock.

2. Function of Limit Switch

Rear diff. lock limit switch (TERMINAL 5 and TERMINAL 6 of diff. lock shift actuator assembly)

The rear diff. lock limit switch in the diff. lock shift actuator assembly feeds back the current rear diff. lock status (Free or lock) information, which is based on the ON/OFF combination of the two switches, to the 4WD control ECU.

4WD limit switch (TERMINAL 3, TERMINAL 5 and TERMINAL 6 of transfer shift actuator assembly)

The 4WD limit switch in the transfer shift actuator assembly feeds back the current shift position status (H2 or H4) and diff. lock or diff. free status information, which is based on the ON/OFF combination of the three switches, to the 4WD control ECU.

ADD limit switch (TERMINAL 6 and TERMINAL 5 of ADD actuator assembly)

The ADD limit switch in the ADD actuator assembly feeds back the current front diff. lock or free status information, which is based on the ON/OFF combination of the two switches, to the 4WD control ECU.

3. Shift Limit Control

The 4WD control ECU interrupts the shift select control and give the driver a warning by means of buzzer (Integrated into the ECU) sound and blinking indicator light on the combination meter when the following shift change conditions exist.

The warning, however, can be canceled — when the 4WD control switch is canceled and the switch position is returned to where it was before the warning occurred.

* Shift change from H2 into H4 with vehicle traveling at a speed reaching or exceeding 100 km/h (Buzzer sound and blinking 4WD indicator lights)
* Shift change from H4 into L4 with vehicle traveling at a speed reaching or exceeding 5 km/h but within the A/T shift position N range (Buzzer sound and blinking 4LO indicator light) (A/T)
* Shift change from H4 into L4 with vehicle traveling at a speed reaching or exceeding 3 km/h but within the clutch start SW on position (Buzzer sound and blinking 4LO indicator light) (M/T)

4. ADD Actuator Control (1GR–FE)

When switching between H2 (2WD) and H4 (4WD), the 4WD control ECU controls the way power is supplied to the ADD motor in the ADD actuator assembly, as shown below, to run the ADD motor in normal or reverse direction, thereby changing the status of the front diff. from free to lock, or vice versa.

For locking front diff.	TERMINAL DM1	+B
	TERMINAL DM2	GROUND
For unlocking front diff.	TERMINAL DM1	GROUND
	TERMINAL DM2	+B

Multi Mode 4WD and Rear Differential Lock (4WD)

○ : Parts Location

Code		See Page	Code		See Page	Code	See Page
A3		40 (1GR–FE)	F15		44	T2	41 (1GR–FE)
		42 (2TR–FE)	J1		45		43 (2TR–FE)
C9	A	44	J5		45	T3	41 (1GR–FE)
C10	B	44	J13		45		43 (2TR–FE)
D5		44	J14		45	T4	41 (1GR–FE)
D6		44	P1		41 (1GR–FE)		43 (2TR–FE)
D10		46 (*1)			43 (2TR–FE)	T13	47 (*1)
		48 (*2)	S1	A	41 (1GR–FE)		48 (*2)
		49 (*3)			43 (2TR–FE)		49 (*3)
F12	A	44		B	41 (1GR–FE)	V1	41 (1GR–FE)
F13	B	44			43 (2TR–FE)		43 (2TR–FE)

⬭ : Relay Blocks

Code	See Page	Relay Blocks (Relay Block Location)
2	24	Engine Room R/B (Engine Compartment Left)

⬭ : Junction Block and Wire Harness Connector

Code	See Page	Junction Block and Wire Harness (Connector Location)
1C	28	Engine Room Main Wire and Driver Side J/B (Lower Finish Panel)
1D	28	Frame Wire and Driver Side J/B (Lower Finish Panel)
1H	29	Instrument Panel Wire and Driver Side J/B (Lower Finish Panel)
1J		
1K		
2A	24	Engine Room J/B (Engine Compartment Left)
DA	34	Instrument Panel Wire and Instrument Panel J/B No.1 (Left Kick Panel)
DB		
DC	34	Engine Room Main Wire and Instrument Panel J/B No.1 (Left Kick Panel)
DD		
PA	36	Engine Wire and Instrument Panel J/B No.2 (Right Side of Glove Box)
PB		
PD	36	Instrument Panel Wire and Instrument Panel J/B No.2 (Right Side of Glove Box)
PF		

▭ : Connector Joining Wire Harness and Wire Harness

Code	See Page	Joining Wire Harness and Wire Harness (Connector Location)
EC1	52 (1GR–FE)	Engine Wire and Differential Wire (Near the Front Differential)
	53 (2TR–FE)	
IA1	54	Instrument Panel Wire and Engine Room Main Wire (Left Kick Panel)
IB1	54	Frame Wire and Engine Room Main Wire (Left Kick Panel)
IH1	55	Engine Wire and Instrument Panel Wire (Right Side of Glove Box)
IJ1	55	Instrument Panel Wire and Instrument Panel Wire (Right Kick Panel)
BD1	56 (*1)	Frame Wire and Differential Wire (Near the Rear Differential)
	57 (*2)	
	58 (*3)	

* 1 : Double Cab * 2 : Access Cab * 3 : Regular Cab * 4 : Separate Seat * 5 : Bench Seat

▽ : **Ground Points**

Code	See Page	Ground Points Location
EE	52 (1GR–FE)	Rear Side of Right Bank Cylinder Block
EH	53 (2TR–FE)	Rear Side of Cylinder Block
IA	54	Left Kick Panel
IC	54	Instrument Panel Brace RH
IE	54	Right Kick Panel

Rear Differential Lock for 2WD

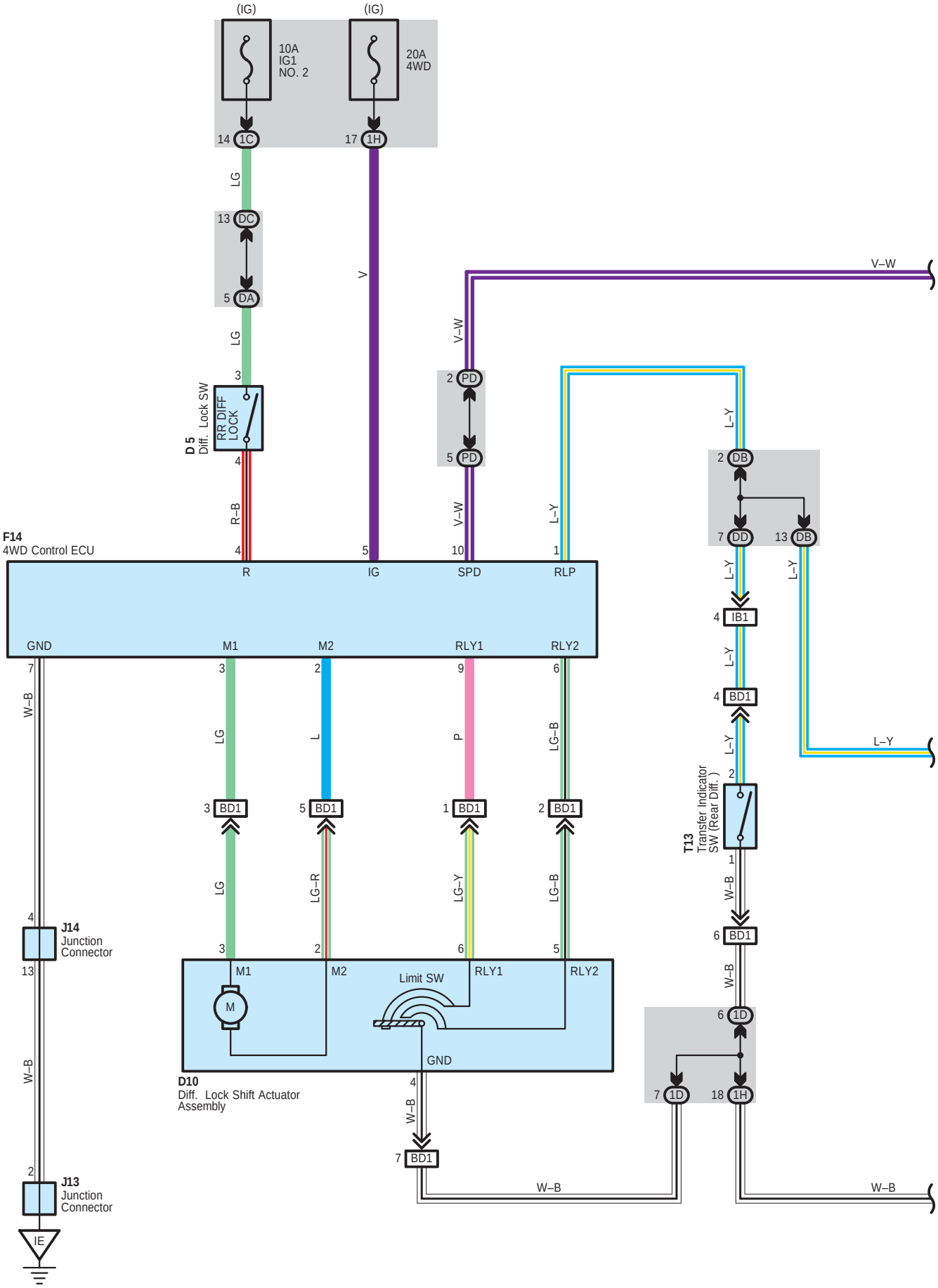

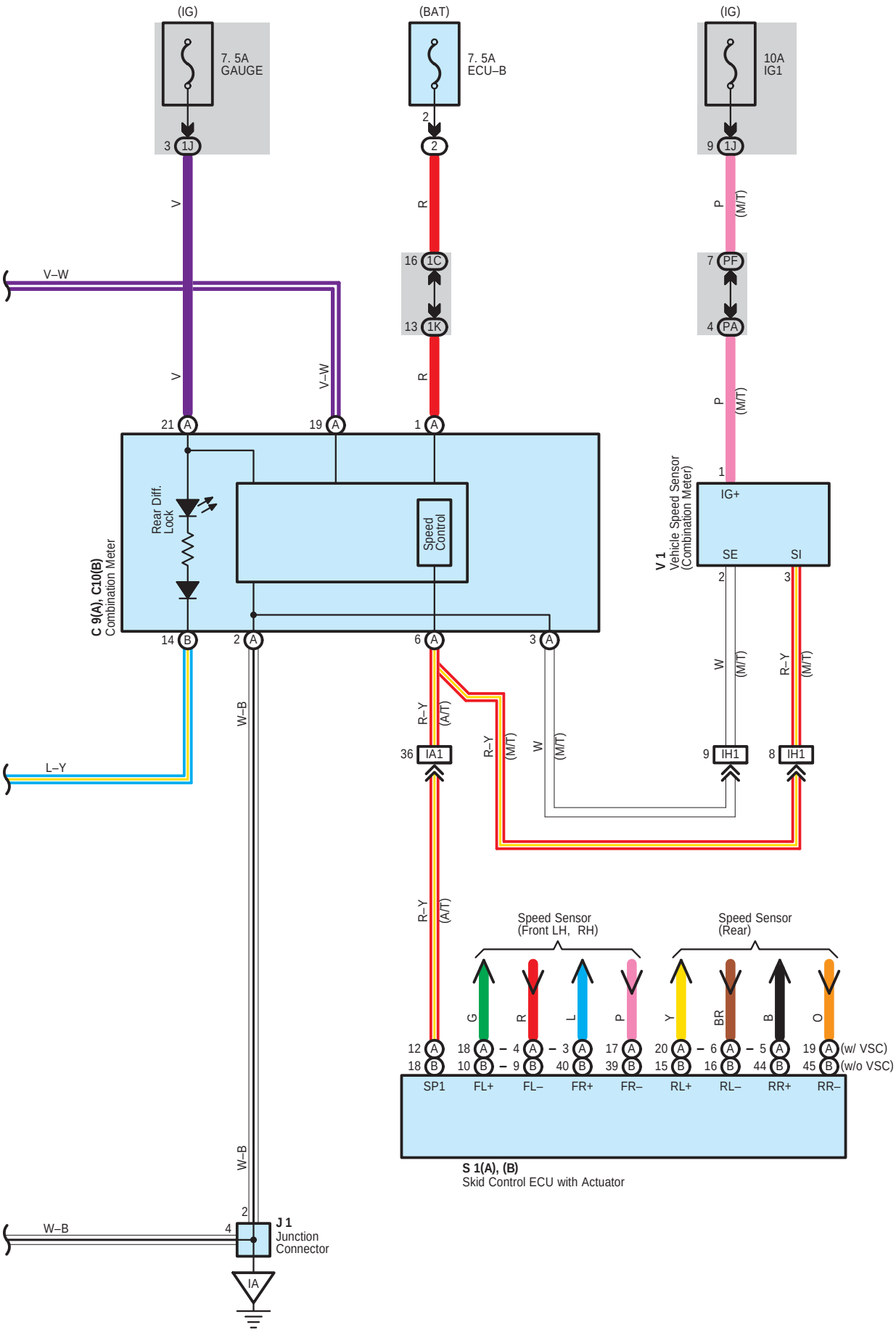
(IG)
7. 5A
GAUGE
3 1J
(BAT)
7. 5A
ECU–B
2
2
(IG)
10A
IG1
9 1J
V
R
P
(M/T)
V–W
16 1C
13 1K
7 PF
4 PA
V
V–W
R
P
(M/T)
21 A
19 A
1 A
1
IG+
SE
SI
V 1
Vehicle Speed Sensor
(Combination Meter)
2
3
Rear Diff.
Lock
Speed
Control
C 9(A), C10(B)
Combination Meter
14 B
2 A
6 A
3 A
W
(M/T)
R–Y
(M/T)
R–Y
(A/T)
W–B
R–Y
(M/T)
W
(M/T)
36 IA1
9 IH1
8 IH1
L–Y
R–Y
(A/T)
Speed Sensor
(Front LH, RH)
Speed Sensor
(Rear)
G
R
L
P
Y
BR
B
O
12 A
18 B
18 A
10 B
4 A
9 B
3 A
40 B
17 A
39 B
20 A
15 B
6 A
16 B
5 A
44 B
19 A
45 B
(w/ VSC)
(w/o VSC)
SP1
FL+
FL–
FR+
FR–
RL+
RL–
RR+
RR–
S 1(A), (B)
Skid Control ECU with Actuator
W–B
2
W–B
4
J 1
Junction
Connector
IA

Rear Differential Lock for 2WD

System Outline

This system frees or locks the rear differential according to the position of the diff. lock SW. The differential will lock only when the transfer indicator SW (Rear diff.) is on and the vehicle speed is at 8 km/h (5 mph) or less.
When the diff. lock SW is switched from OFF position to ON position, current flows to TERMINAL 4 of the 4WD control ECU. If the limit SW on the lock side inside the diff. lock shift actuator assembly is on at this time, until the limit SW is turned off, current flows from the 4WD fuse to TERMINAL 5 of the 4WD control ECU to TERMINAL 3 to TERMINAL 3 of the diff. lock shift actuator to TERMINAL 2 to TERMINAL 2 of the 4WD control ECU to TERMINAL 7 to GROUND. This drives the diff. lock shift actuator and locks the rear differential. When the rear differential locks, the transfer indicator SW (Rear diff.) turns on, lighting up the rear diff. lock indicator light in the combination meter.
When the diff. lock SW is switched from ON position to OFF position, the current to TERMINAL 4 of the 4WD control ECU is cut off. If the limit SW on the free side inside the diff. lock shift actuator asesmbly is on, until the limit SW is turned off, current flows from the 4WD fuse to TERMINAL 5 of the 4WD control ECU to TERMINAL 2 to TERMINAL 2 of the diff. lock shift actuator assembly to TERMINAL 3 to TERMINAL 3 of the 4WD control ECU to TERMINAL 7 to GROUND. This drives the diff. lock shift actuator and frees the rear differential. When the rear differential is free, the transfer indicator SW (Rear diff.) and the rear diff. lock indicator light in the combination meter are turned off.
The rear diff. lock indicator light flashes when:

* The diff. lock SW is switched to ON position during differential lock prohibition conditions (Vehicle speed above 8 km/h (5 mph)).
* The transfer indicator SW (Rear diff.) is turned off during operation of the diff. lock shift actuator.

: Parts Location

Code		See Page	Code		See Page	Code	See Page
C9	A	44	J1		45	T13	47 (*1)
C10	B	44	J13		45		48 (*2)
D5		44	J14		45		49 (*3)
D10		46 (*1)	S1	A	41 (1GR–FE)	V1	41 (1GR–FE)
		48 (*2)			43 (2TR–FE)		43 (2TR–FE)
		49 (*3)		B	41 (1GR–FE)		
F14		44			43 (2TR–FE)		

: Relay Blocks

Code	See Page	Relay Blocks (Relay Block Location)
2	24	Engine Room R/B (Engine Compartment Left)

: Junction Block and Wire Harness Connector

Code	See Page	Junction Block and Wire Harness (Connector Location)
1C	28	Engine Room Main Wire and Driver Side J/B (Lower Finish Panel)
1D	28	Frame Wire and Driver Side J/B (Lower Finish Panel)
1H	29	Instrument Panel Wire and Driver Side J/B (Lower Finish Panel)
1J		
1K		
DA	34	Instrument Panel Wire and Instrument Panel J/B No.1 (Left Kick Panel)
DB		
DC	34	Engine Room Main Wire and Instrument Panel J/B No.1 (Left Kick Panel)
DD		
PA	36	Engine Wire and Instrument Panel J/B No.2 (Right Side of Glove Box)
PD	36	Instrument Panel Wire and Instrument Panel J/B No.2 (Right Side of Glove Box)
PF		

* 1 : Double Cab * 2 : Access Cab * 3 : Regular Cab * 4 : Separate Seat * 5 : Bench Seat

: Connector Joining Wire Harness and Wire Harness

Code	See Page	Joining Wire Harness and Wire Harness (Connector Location)
IA1	54	Instrument Panel Wire and Engine Room Main Wire (Left Kick Panel)
IB1	54	Frame Wire and Engine Room Main Wire (Left Kick Panel)
IH1	55	Engine Wire and Instrument Panel Wire (Right Side of Glove Box)
BD1	56 (*1)	Frame Wire and Differential Wire (Near the Rear Differential)
	57 (*2)	
	58 (*3)	

: Ground Points

Code	See Page	Ground Points Location
IA	54	Left Kick Panel
IE	54	Right Kick Panel

* 1 : Double Cab * 2 : Access Cab * 3 : Regular Cab * 4 : Separate Seat * 5 : Bench Seat

Wiper and Washer with INT Time SW

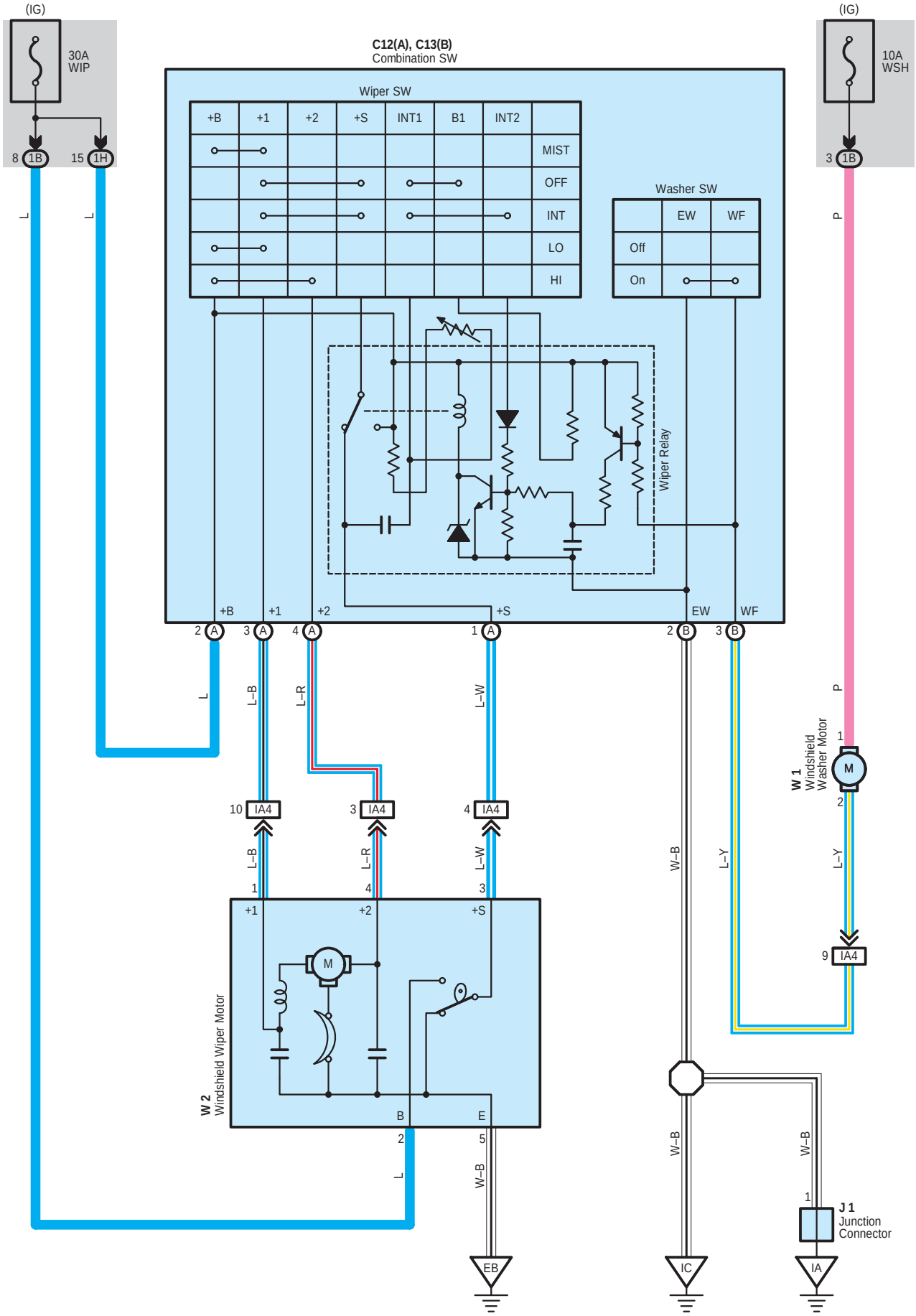

System Outline

With the ignition SW turned on, the current flows to TERMINAL (A) 2 of the combination SW and TERMINAL 2 of the windshield wiper motor through the WIP fuse. The current flows to TERMINAL 1 of the windshield washer motor through the WSH fuse.

1. Low Speed Position

With the wiper and washer SW turned to LO position, the current flows from TERMINAL (A) 2 of the combination SW to TERMINAL (A) 3 to TERMINAL 1 of the windshield wiper motor to TERMINAL 5 to GROUND and causes the windshield wiper motor to run at low speed.

2. High Speed Position

With the wiper and washer SW turned to HI position, the current flows from TERMINAL (A) 2 of the combination SW to TERMINAL (A) 4 to TERMINAL 4 of the windshield wiper motor to TERMINAL 5 to GROUND and causes the windshield wiper motor to run at high speed.

3. INT Position

With the wiper and washer SW turned to INT position, the wiper relay operates and current flows from TERMINAL (A) 2 of the combination SW to TERMINAL (B) 2 to GROUND. This activates the intermittent circuit and the current flows from TERMINAL (A) 2 of the combination SW to TERMINAL (A) 3 to TERMINAL 1 of the windshield wiper motor to TERMINAL 5 to GROUND and the wiper operates. Intermittent operation is controlled by a condenser charge and discharge function in the relay.

4. Washer Continuous Operation

With the wiper and washer SW pulled to on position (Washer SW ON position), the current flows from the WSH fuse to TERMINAL 1 of the windshield washer motor to TERMINAL 2 to TERMINAL (B) 3 of the combination SW to TERMINAL (B) 2 to GROUND and causes the windshield washer motor to run and the window washer to spray. Simultaneously, current flows from the WIP fuse to TERMINAL (A) 2 of the combination SW to TERMINAL (A) 3 to TERMINAL 1 of the windshield wiper motor to TERMINAL 5 to GROUND, causing the wiper to function.

: Parts Location

Code		See Page	Code	See Page	Code	See Page
C12	A	44	W1	41 (1GR–FE)	W2	43 (2TR–FE)
C13	B	44		43 (2TR–FE)		
J1		45	W2	41 (1GR–FE)		

: Junction Block and Wire Harness Connector

Code	See Page	Junction Block and Wire Harness (Connector Location)
1B	28	Engine Room Main Wire and Driver Side J/B (Lower Finish Panel)
1H	29	Instrument Panel Wire and Driver Side J/B (Lower Finish Panel)

: Connector Joining Wire Harness and Wire Harness

Code	See Page	Joining Wire Harness and Wire Harness (Connector Location)
IA4	54	Instrument Panel Wire and Engine Room Main Wire (Left Kick Panel)

: Ground Points

Code	See Page	Ground Points Location
EB	52 (1GR–FE)	Front Left Fender
	53 (2TR–FE)	
IA	54	Left Kick Panel
IC	54	Instrument Panel Brace RH

Wiper and Washer without INT Time SW

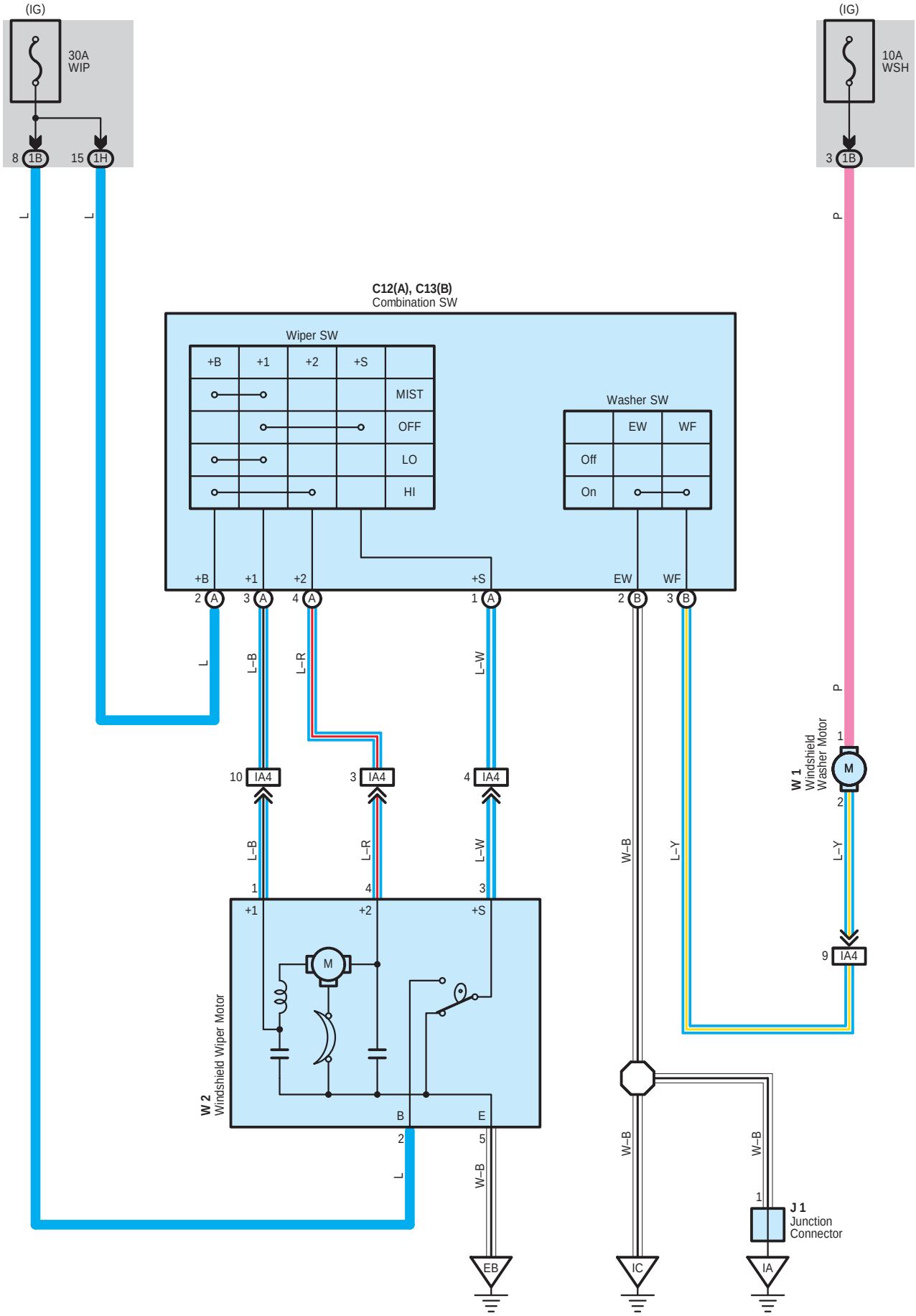

System Outline

With the ignition SW turned on, the current flows to TERMINAL (A) 2 of the combination SW and TERMINAL 2 of the windshield wiper motor through the WIP fuse. The current flows to TERMINAL 1 of the windshield washer motor through the WSH fuse.

1. Low Speed Position

With the wiper and washer SW turned to LO position, the current flows from TERMINAL (A) 2 of the combination SW to TERMINAL (A) 3 to TERMINAL 1 of the windshield wiper motor to TERMINAL 5 to GROUND and causes the windshield wiper motor to run at low speed.

2. High Speed Position

With the wiper and washer SW turned to HI position, the current flows from TERMINAL (A) 2 of the combination SW to TERMINAL (A) 4 to TERMINAL 4 of the windshield wiper motor to TERMINAL 5 to GROUND and causes the windshield wiper motor to run at high speed.

3. MIST Position

With the wiper SW turned to MIST position, current flows from TERMINAL (A) 2 of the combination SW to TERMINAL (A) 3 to TERMINAL 1 of the windshield wiper motor to TERMINAL 5 to GROUND and causes the windshield wiper motor to run at low speed.

4. Washer Continuous Operation

With the wiper and washer SW pulled to washer position (Washer SW ON position), the current flows from the WSH fuse to TERMINAL 1 of the windshield washer motor to TERMINAL 2 to TERMINAL (B) 3 of the combination SW to TERMINAL (B) 2 to GROUND and causes the windshield washer motor to run and the window washer to spray. Simultaneously, current flows from the WIP fuse to TERMINAL (A) 2 of the combination SW to TERMINAL (A) 3 to TERMINAL 1 of the windshield wiper motor to TERMINAL 5 to GROUND, causing the wiper to function.

: Parts Location

Code		See Page	Code	See Page	Code	See Page
C12	A	44	W1	41 (1GR–FE)	W2	43 (2TR–FE)
C13	B	44		43 (2TR–FE)		
J1		45	W2	41 (1GR–FE)		

: Junction Block and Wire Harness Connector

Code	See Page	Junction Block and Wire Harness (Connector Location)
1B	28	Engine Room Main Wire and Driver Side J/B (Lower Finish Panel)
1H	29	Instrument Panel Wire and Driver Side J/B (Lower Finish Panel)

: Connector Joining Wire Harness and Wire Harness

Code	See Page	Joining Wire Harness and Wire Harness (Connector Location)
IA4	54	Instrument Panel Wire and Engine Room Main Wire (Left Kick Panel)

: Ground Points

Code	See Page	Ground Points Location
EB	52 (1GR–FE)	Front Left Fender
	53 (2TR–FE)	
IA	54	Left Kick Panel
IC	54	Instrument Panel Brace RH

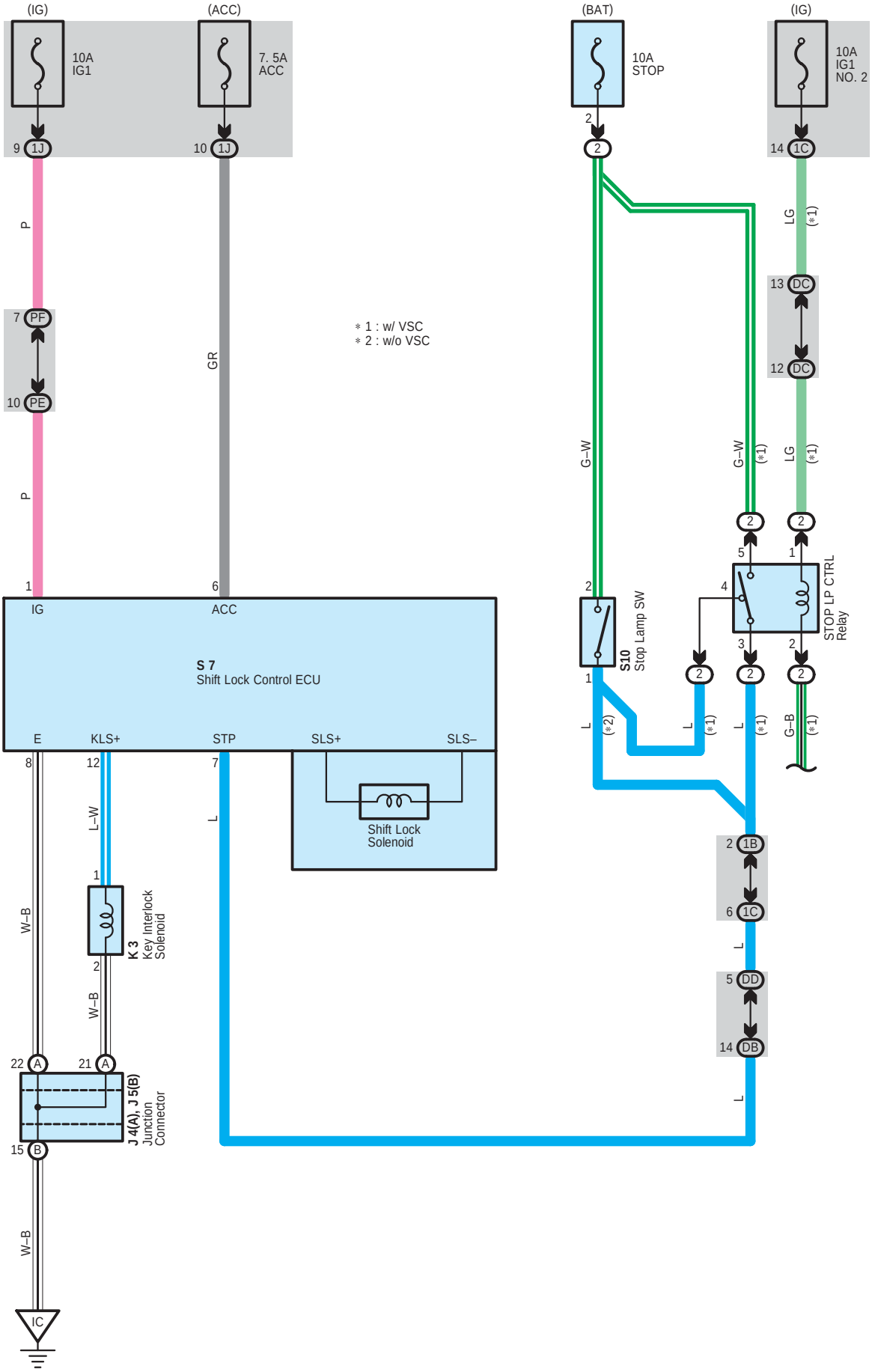
(IG)
(ACC)
(BAT)
(IG)
10A
IG1
7. 5A
ACC
10A
STOP
10A
IG1
NO. 2
9 1J
10 1J
2
14 1C
P
GR
G–W
LG
(*1)
7 PF
10 PE
13 DC
12 DC
* 1 : w/ VSC
* 2 : w/o VSC
P
1
IG
6
ACC
S 7
Shift Lock Control ECU
S10
Stop Lamp SW
STOP LP CTRL
Relay
E
KLS+
STP
SLS+
SLS–
8
12
7
L–W
L
(*2)
Shift Lock
Solenoid
K 3
Key Interlock
Solenoid
W–B
2 1B
6 1C
5 DD
14 DB
22 A
21 A
J 4(A), J 5(B)
Junction
Connector
15 B
IC

System Outline

When the ignition SW is turned to ACC position the current from the ACC fuse flows to TERMINAL 6 of the shift lock control ECU. When the ignition SW is turned to ON position, the current from the IG1 fuse flows to TERMINAL 1 of the shift lock control ECU.

1. Shift Lock Mechanism

If the brake pedal is depressed with the ignition SW set at ON (The stop lamp SW is on), the shift lock control ECU is activated, allowing the driver to change the shift lever to a position other than the P position.

2. Key Interlock Mechanism

With the ignition SW at ON or ACC position, when the shift lever is put in P position, the current flowing from TERMINAL 12 of the shift lock control ECU to key interlock solenoid is cut off. This causes the key interlock solenoid to turn off (Lock lever disengages from LOCK position) and the ignition key can be turned from ACC to LOCK position.

: Parts Location

Code		See Page	Code	See Page	Code	See Page
J4	A	45	K3	45	S10	45
J5	B	45	S7	45		

: Relay Blocks

Code	See Page	Relay Blocks (Relay Block Location)
2	24	Engine Room R/B (Engine Compartment Left)

: Junction Block and Wire Harness Connector

Code	See Page	Junction Block and Wire Harness (Connector Location)
1B	28	Engine Room Main Wire and Driver Side J/B (Lower Finish Panel)
1C		
1J	29	Instrument Panel Wire and Driver Side J/B (Lower Finish Panel)
DB	34	Instrument Panel Wire and Instrument Panel J/B No.1 (Left Kick Panel)
DC	34	Engine Room Main Wire and Instrument Panel J/B No.1 (Left Kick Panel)
DD		
PE	36	Instrument Panel Wire and Instrument Panel J/B No.2 (Right Side of Glove Box)
PF		

: Ground Points

Code	See Page	Ground Points Location
IC	54	Instrument Panel Brace RH

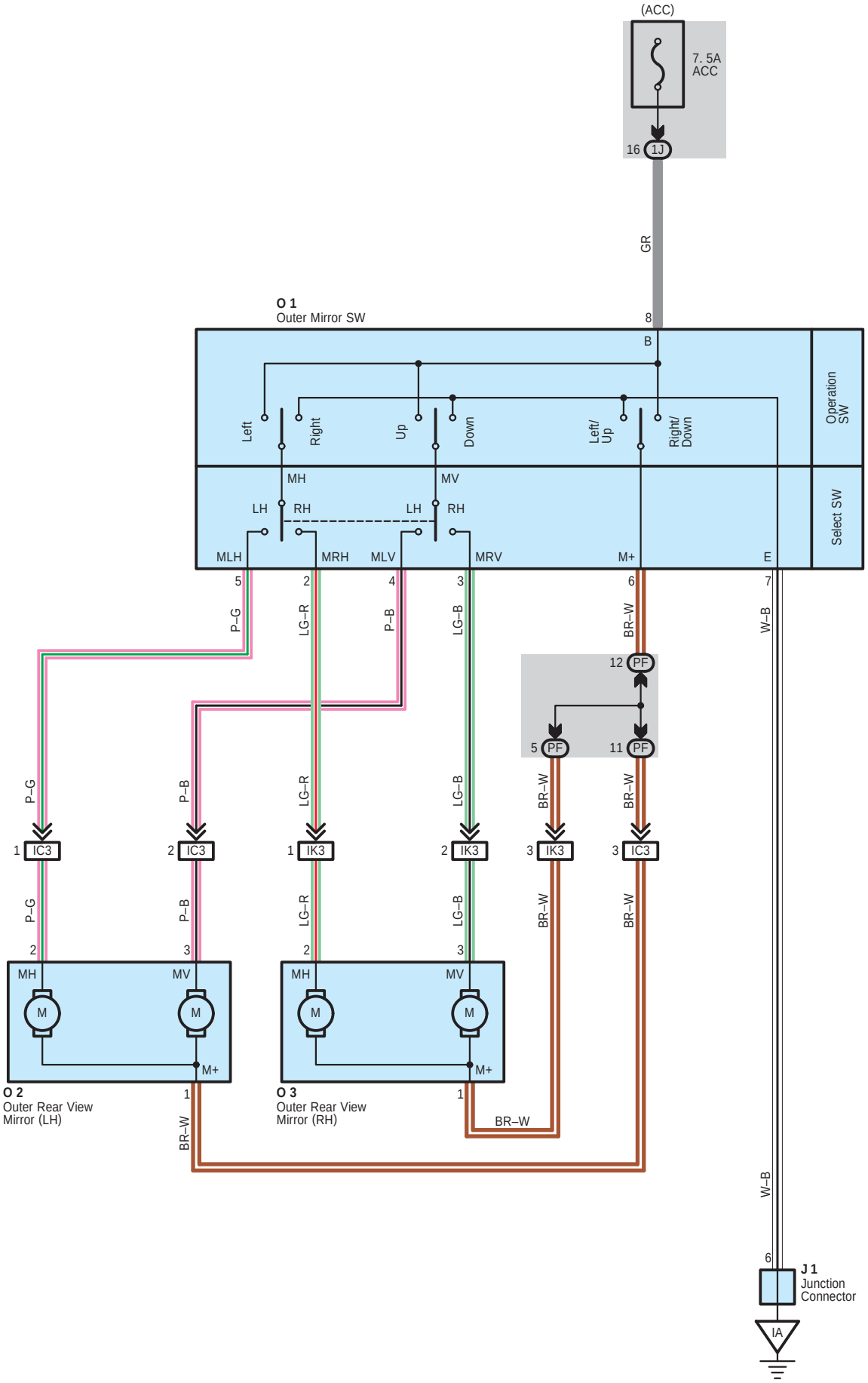
(ACC)
7. 5A
ACC
16
1J
GR
O 1
Outer Mirror SW
8
B
Left
Right
Up
Down
Left/
Up
Right/
Down
Operation
SW
MH
MV
LH
RH
LH
RH
Select SW
MLH
MRH
MLV
MRV
M+
E
5
2
4
3
6
7
P–G
LG–R
P–B
LG–B
BR–W
W–B
12
PF
5
PF
11
PF
P–G
P–B
LG–R
LG–B
BR–W
BR–W
1
IC3
2
IC3
1
IK3
2
IK3
3
IK3
3
IC3
P–G
P–B
LG–R
LG–B
BR–W
BR–W
2
3
2
3
MH
MV
MH
MV
M
M
M
M
M+
M+
O 2
Outer Rear View
Mirror (LH)
1
O 3
Outer Rear View
Mirror (RH)
1
BR–W
BR–W
W–B
6
J 1
Junction
Connector
IA

: Parts Location

Code	See Page	Code	See Page	Code	See Page
J1	45	O2	46 (*1)	O3	46 (*1)
O1	45		48 (*2)		48 (*2)

: Junction Block and Wire Harness Connector

Code	See Page	Junction Block and Wire Harness (Connector Location)
1J	29	Instrument Panel Wire and Driver Side J/B (Lower Finish Panel)
PF	36	Instrument Panel Wire and Instrument Panel J/B No.2 (Right Side of Glove Box)

: Connector Joining Wire Harness and Wire Harness

Code	See Page	Joining Wire Harness and Wire Harness (Connector Location)
IC3	54	Front Door LH Wire and Instrument Panel Wire (Left Kick Panel)
IK3	55	Front Door RH Wire and Instrument Panel Wire (Right Kick Panel)

: Ground Points

Code	See Page	Ground Points Location
IA	54	Left Kick Panel

* 1 : Double Cab * 2 : Access Cab * 3 : Regular Cab * 4 : Separate Seat * 5 : Bench Seat

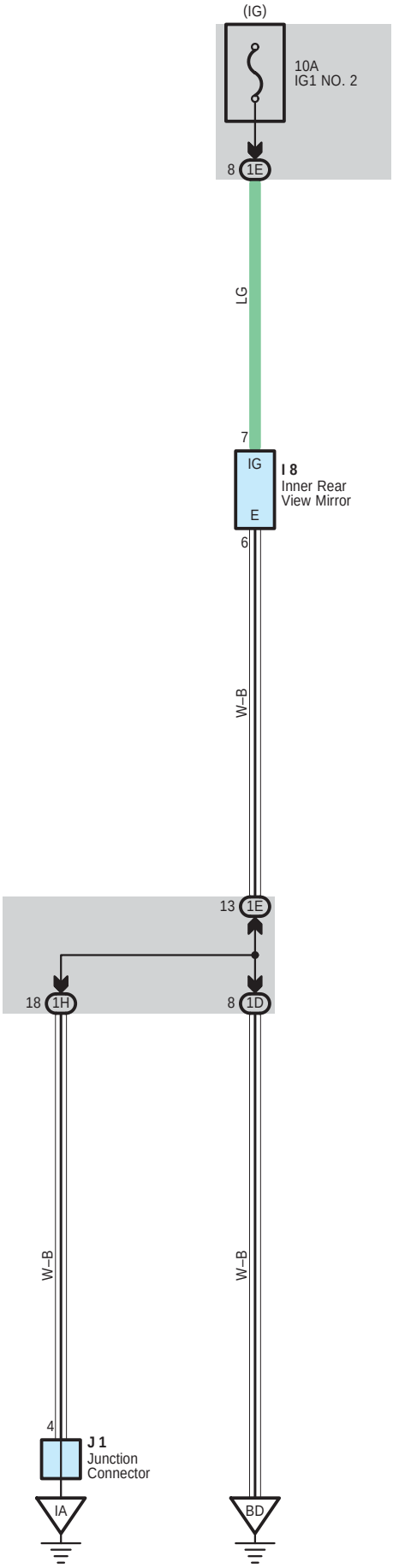
(IG)
10A
IG1 NO. 2
8
1E
LG
7
IG
E
I 8
Inner Rear
View Mirror
6
W–B
13
1E
18
1H
8
1D
W–B
W–B
4
J 1
Junction
Connector
IA
BD

○ : Parts Location

Code	See Page	Code	See Page	Code	See Page
I8	46 (*1)	I8	48 (*2)	J1	45

: Junction Block and Wire Harness Connector

Code	See Page	Junction Block and Wire Harness (Connector Location)
1D	28	Frame Wire and Driver Side J/B (Lower Finish Panel)
1E	28	Roof Wire and Driver Side J/B (Lower Finish Panel)
1H	29	Instrument Panel Wire and Driver Side J/B (Lower Finish Panel)

▽ : Ground Points

Code	See Page	Ground Points Location
IA	54	Left Kick Panel
BD	56 (*1)	Near the Rear Differential
	57 (*2)	

* 1 : Double Cab * 2 : Access Cab * 3 : Regular Cab * 4 : Separate Seat * 5 : Bench Seat

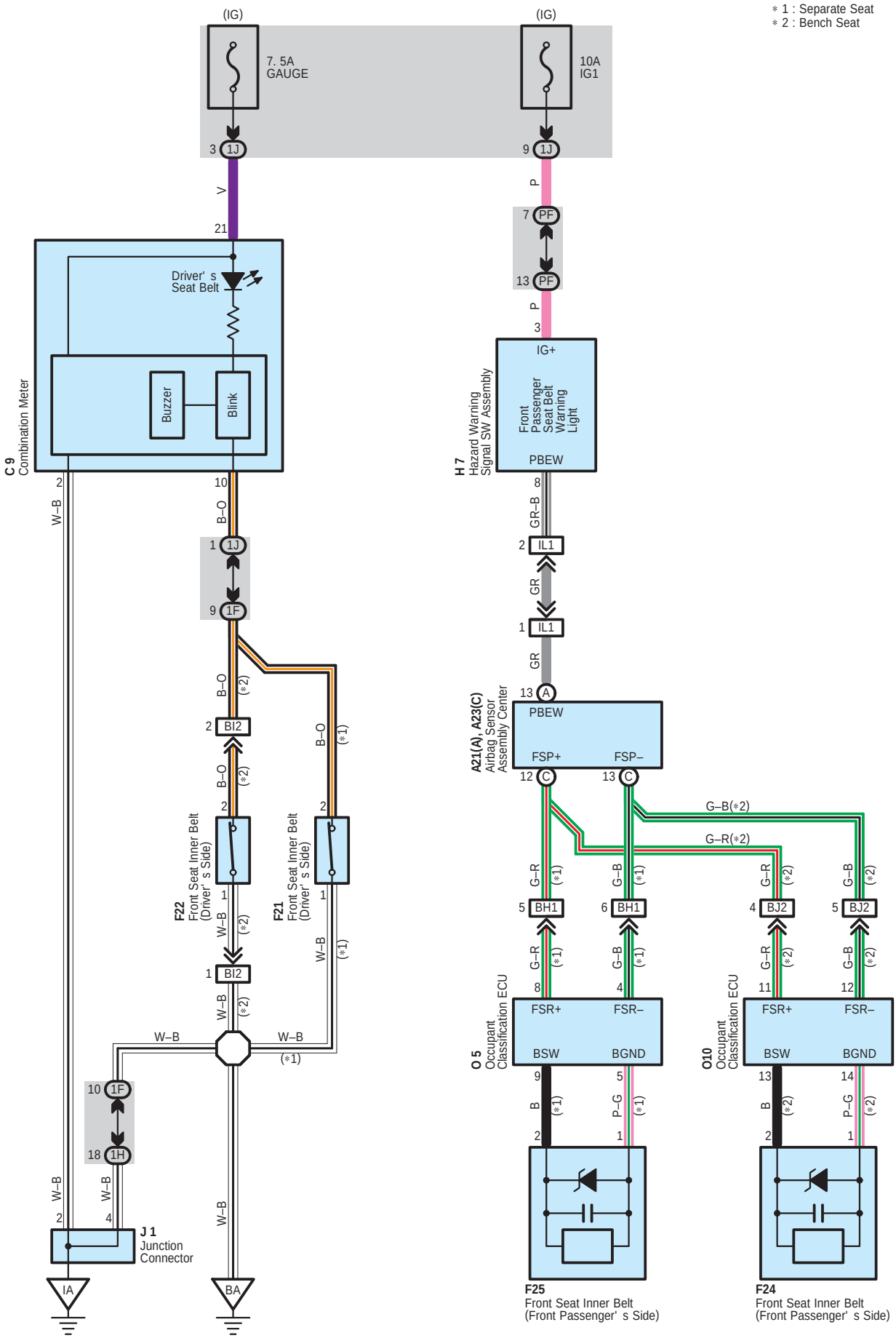
∗ 1 : Separate Seat
∗ 2 : Bench Seat
(IG)
7. 5A
GAUGE
(IG)
10A
IG1
3 1J
9 1J
V
P
21
7 PF
13 PF
P
3
Driver' s
Seat Belt
Buzzer
Blink
C 9
Combination Meter
IG+
Front
Passenger
Seat Belt
Warning
Light
PBEW
H 7
Hazard Warning
Signal SW Assembly
2
W–B
10
B–O
8
GR–B
2 IL1
GR
1 IL1
GR
13 A
1 1J
9 1F
B–O
(∗2)
2 BI2
B–O
(∗2)
2
B–O
(∗1)
A21(A), A23(C)
Airbag Sensor
Assembly Center
PBEW
FSP+
FSP–
12 C
13 C
G–B(∗2)
G–R(∗2)
F22
Front Seat Inner Belt
(Driver' s Side)
F21
Front Seat Inner Belt
(Driver' s Side)
1
W–B
(∗2)
1 BI2
W–B
(∗2)
W–B
W–B
(∗1)
W–B
(∗1)
G–R
(∗1)
G–B
(∗1)
G–R
(∗2)
G–B
(∗2)
5 BH1
6 BH1
4 BJ2
5 BJ2
G–R
(∗1)
G–B
(∗1)
G–R
(∗2)
G–B
(∗2)
8
4
11
12
O 5
Occupant
Classification ECU
FSR+
FSR–
BSW
BGND
O10
Occupant
Classification ECU
FSR+
FSR–
BSW
BGND
9
5
13
14
B
(∗1)
P–G
(∗1)
B
(∗2)
P–G
(∗2)
2
1
2
1
10 1F
18 1H
W–B
W–B
2
4
W–B
J 1
Junction
Connector
IA
BA
F25
Front Seat Inner Belt
(Front Passenger' s Side)
F24
Front Seat Inner Belt
(Front Passenger' s Side)

System Outline

When the driver has not fastened the seat belt while the ignition SW is ON, the driver seat belt warning light blinks, and a warning buzzer comes on.
Also, in the front passenger seat, a sensor recognizes passenger, and when the passenger has not fastened the seat belt, the front passenger seat belt warning light blinks.

○ : Parts Location

Code		See Page	Code	See Page	Code	See Page
A21	A	44	F22	51 (*5)	J1	45
A23	C	44	F24	51 (*5)	O5	50 (*4)
C9		44	F25	50 (*4)	O10	51 (*5)
F21		50 (*4)	H7	45		

: Junction Block and Wire Harness Connector

Code	See Page	Junction Block and Wire Harness (Connector Location)
1F	28	Floor No.2 Wire and Driver Side J/B (Lower Finish Panel)
1H	29	Instrument Panel Wire and Driver Side J/B (Lower Finish Panel)
1J		
PF	36	Instrument Panel Wire and Instrument Panel J/B No.2 (Right Side of Glove Box)

: Connector Joining Wire Harness and Wire Harness

Code	See Page	Joining Wire Harness and Wire Harness (Connector Location)
IL1	55	Instrument Panel Wire and Floor Wire (Right Kick Panel)
BH1	60 (*4)	Floor Wire and Seat No.1 Wire (Under the Front Passenger's Seat)
BI2	61 (*5)	Floor No.2 Wire and Seat No.1 Wire (Under the Front Seat LH)
BJ2	61 (*5)	Floor Wire and Seat No.1 Wire (Under the Front Seat RH)

▽ : Ground Points

Code	See Page	Ground Points Location
IA	54	Left Kick Panel
BA	56 (*1)	Floor Seat Cross Member LH
	57 (*2)	
	58 (*3)	

* 1 : Double Cab * 2 : Access Cab * 3 : Regular Cab * 4 : Separate Seat * 5 : Bench Seat

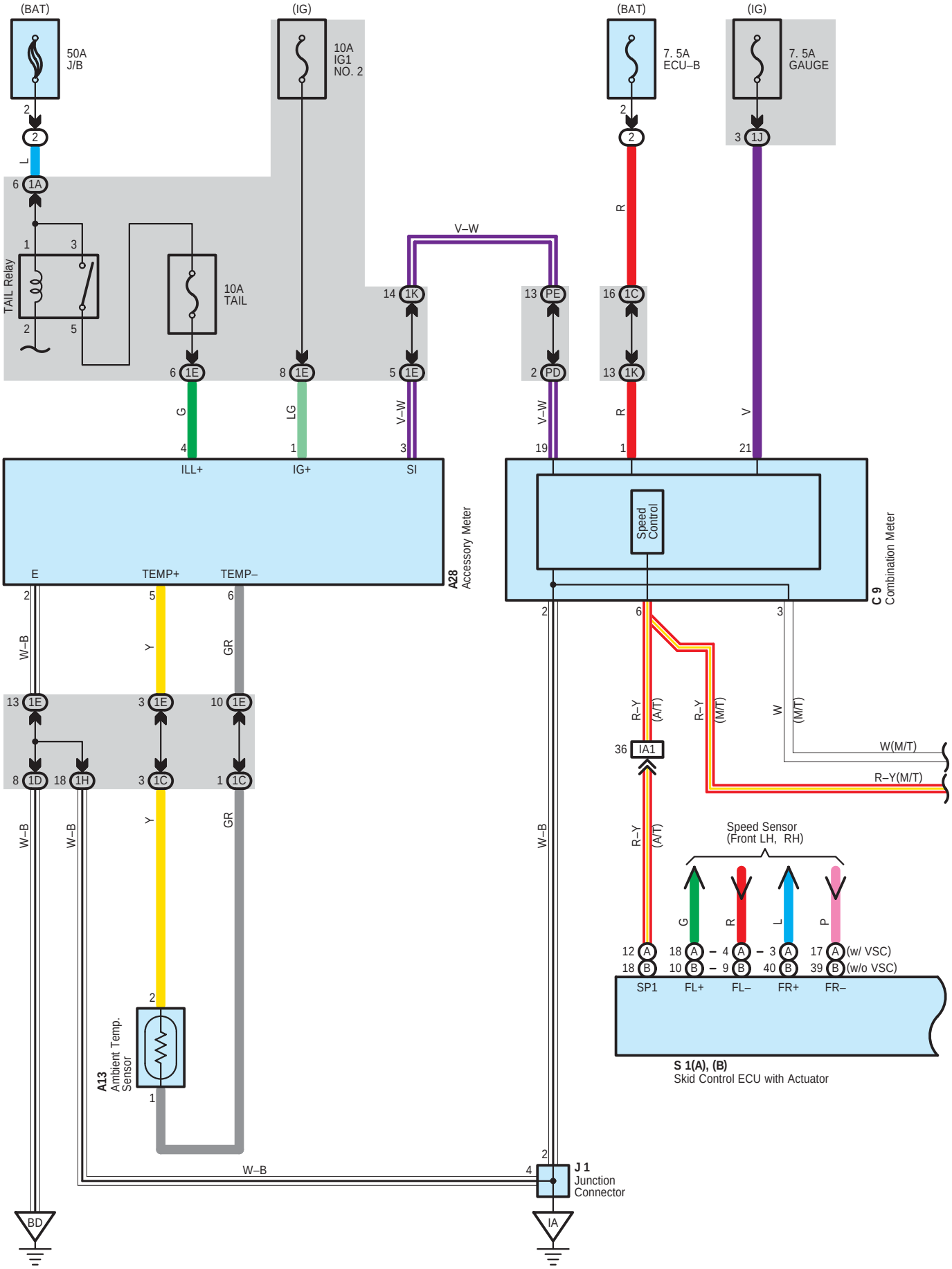
(BAT)
50A
J/B
(IG)
10A
IG1
NO. 2
(BAT)
7. 5A
ECU–B
(IG)
7. 5A
GAUGE
TAIL Relay
10A
TAIL
V–W
L
R
V
G
LG
V–W
V–W
R
ILL+
IG+
SI
A28
Accessory Meter
Speed
Control
C 9
Combination Meter
E
TEMP+
TEMP–
W–B
Y
GR
W–B
W–B
Y
GR
W–B
R–Y
(A/T)
R–Y
(M/T)
W
(M/T)
W(M/T)
R–Y(M/T)
R–Y
(A/T)
Speed Sensor
(Front LH, RH)
G
R
L
P
(w/ VSC)
(w/o VSC)
SP1
FL+
FL–
FR+
FR–
S 1(A), (B)
Skid Control ECU with Actuator
A13
Ambient Temp.
Sensor
W–B
J 1
Junction
Connector
BD
IA

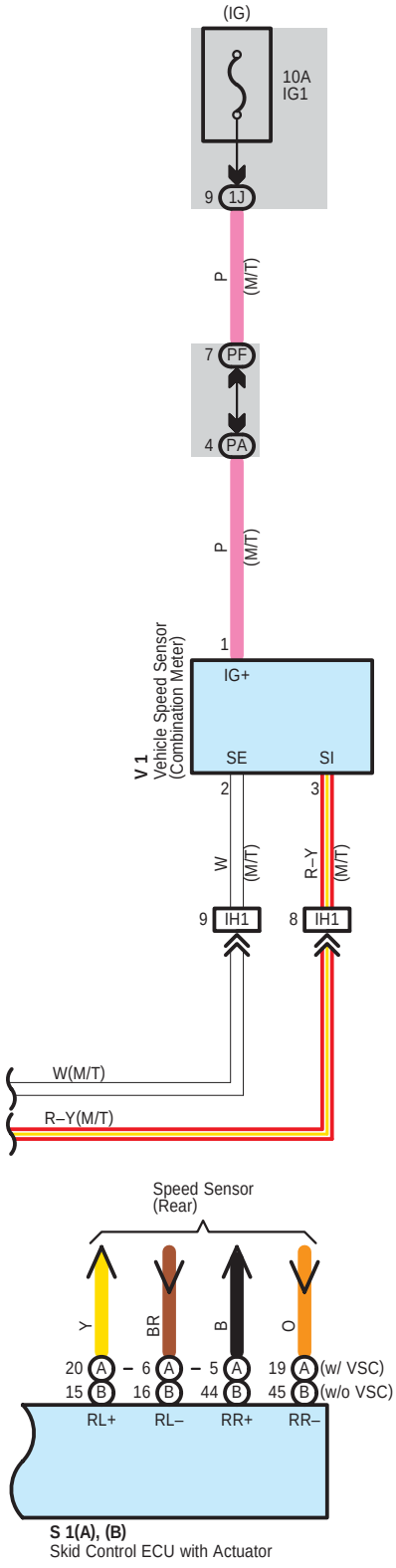
(IG)
10A
IG1
9 1J
P (M/T)
7 PF
4 PA
P (M/T)
1
IG+
SE
SI
V 1
Vehicle Speed Sensor
(Combination Meter)
2
3
W (M/T)
R–Y (M/T)
9 IH1
8 IH1
W(M/T)
R–Y(M/T)
Speed Sensor
(Rear)
Y
BR
B
O
20 A
15 B
6 A
16 B
5 A
44 B
19 A
45 B
(w/ VSC)
(w/o VSC)
RL+
RL–
RR+
RR–
S 1(A), (B)
Skid Control ECU with Actuator

Accessory Meter

: Parts Location

Code	See Page	Code	See Page	Code	See Page
A13	40 (1GR–FE)	C9	44	S1 B	41 (1GR–FE)
	42 (2TR–FE)	J1	45		43 (2TR–FE)
A28	46 (*1)	S1 A	41 (1GR–FE)	V1	41 (1GR–FE)
	48 (*2)		43 (2TR–FE)		43 (2TR–FE)

: Relay Blocks

Code	See Page	Relay Blocks (Relay Block Location)
2	24	Engine Room R/B (Engine Compartment Left)

: Junction Block and Wire Harness Connector

Code	See Page	Junction Block and Wire Harness (Connector Location)
1A	28	Engine Room Main Wire and Driver Side J/B (Lower Finish Panel)
1C		
1D	28	Frame Wire and Driver Side J/B (Lower Finish Panel)
1E	28	Roof Wire and Driver Side J/B (Lower Finish Panel)
1H	29	Instrument Panel Wire and Driver Side J/B (Lower Finish Panel)
1J		
1K		
PA	36	Engine Wire and Instrument Panel J/B No.2 (Right Side of Glove Box)
PD	36	Instrument Panel Wire and Instrument Panel J/B No.2 (Right Side of Glove Box)
PE		
PF		

: Connector Joining Wire Harness and Wire Harness

Code	See Page	Joining Wire Harness and Wire Harness (Connector Location)
IA1	54	Instrument Panel Wire and Engine Room Main Wire (Left Kick Panel)
IH1	55	Engine Wire and Instrument Panel Wire (Right Side of Glove Box)

: Ground Points

Code	See Page	Ground Points Location
IA	54	Left Kick Panel
BD	56 (*1)	Near the Rear Differential
	57 (*2)	

* 1 : Double Cab * 2 : Access Cab * 3 : Regular Cab * 4 : Separate Seat * 5 : Bench Seat

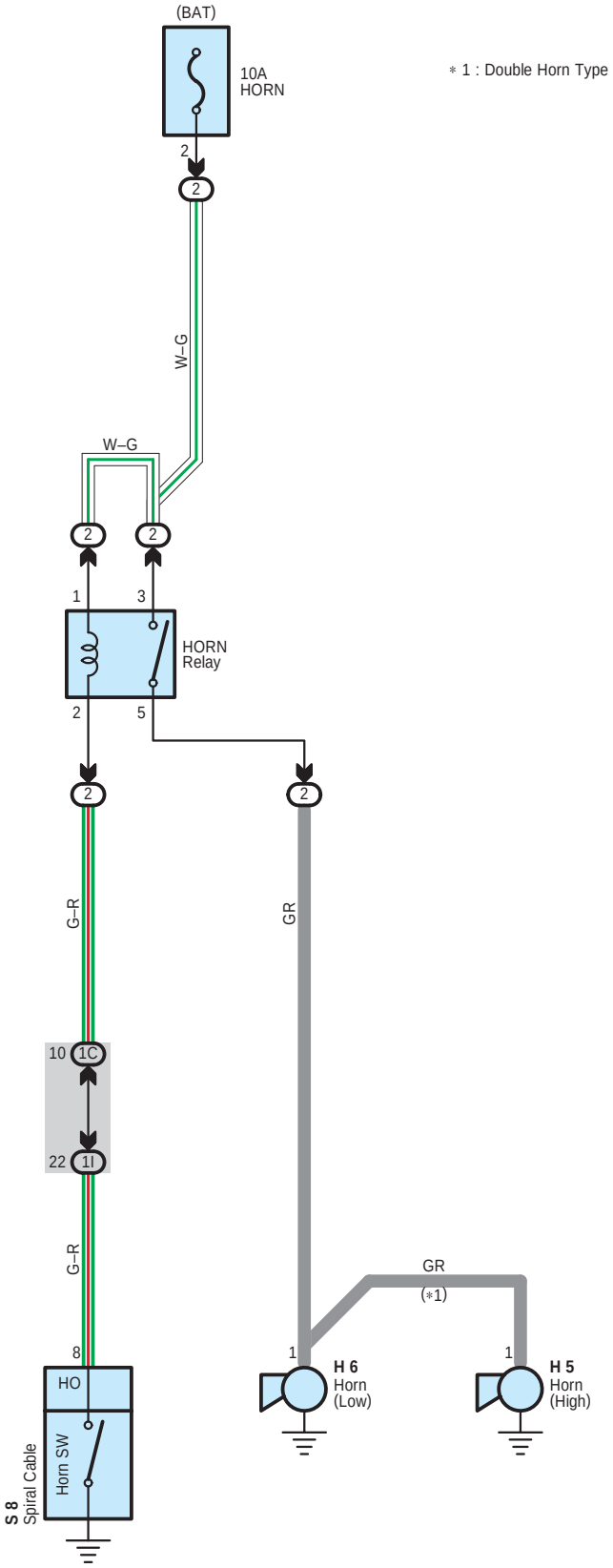
(BAT)
10A
HORN
2
2
W–G
W–G
2
2
1
3
HORN
Relay
2
5
2
2
G–R
GR
10
1C
22
1I
G–R
GR
(*1)
8
1
1
HO
Horn SW
S 8
Spiral Cable
H 6
Horn
(Low)
H 5
Horn
(High)
* 1 : Double Horn Type

: Parts Location

Code	See Page	Code	See Page	Code	See Page
H5	41 (1GR–FE)	H6	41 (1GR–FE)	S8	45
	43 (2TR–FE)		43 (2TR–FE)		

: Relay Blocks

Code	See Page	Relay Blocks (Relay Block Location)
2	24	Engine Room R/B (Engine Compartment Left)

: Junction Block and Wire Harness Connector

Code	See Page	Junction Block and Wire Harness (Connector Location)
1C	28	Engine Room Main Wire and Driver Side J/B (Lower Finish Panel)
1I	29	Instrument Panel Wire and Driver Side J/B (Lower Finish Panel)

Power Outlet for 115V

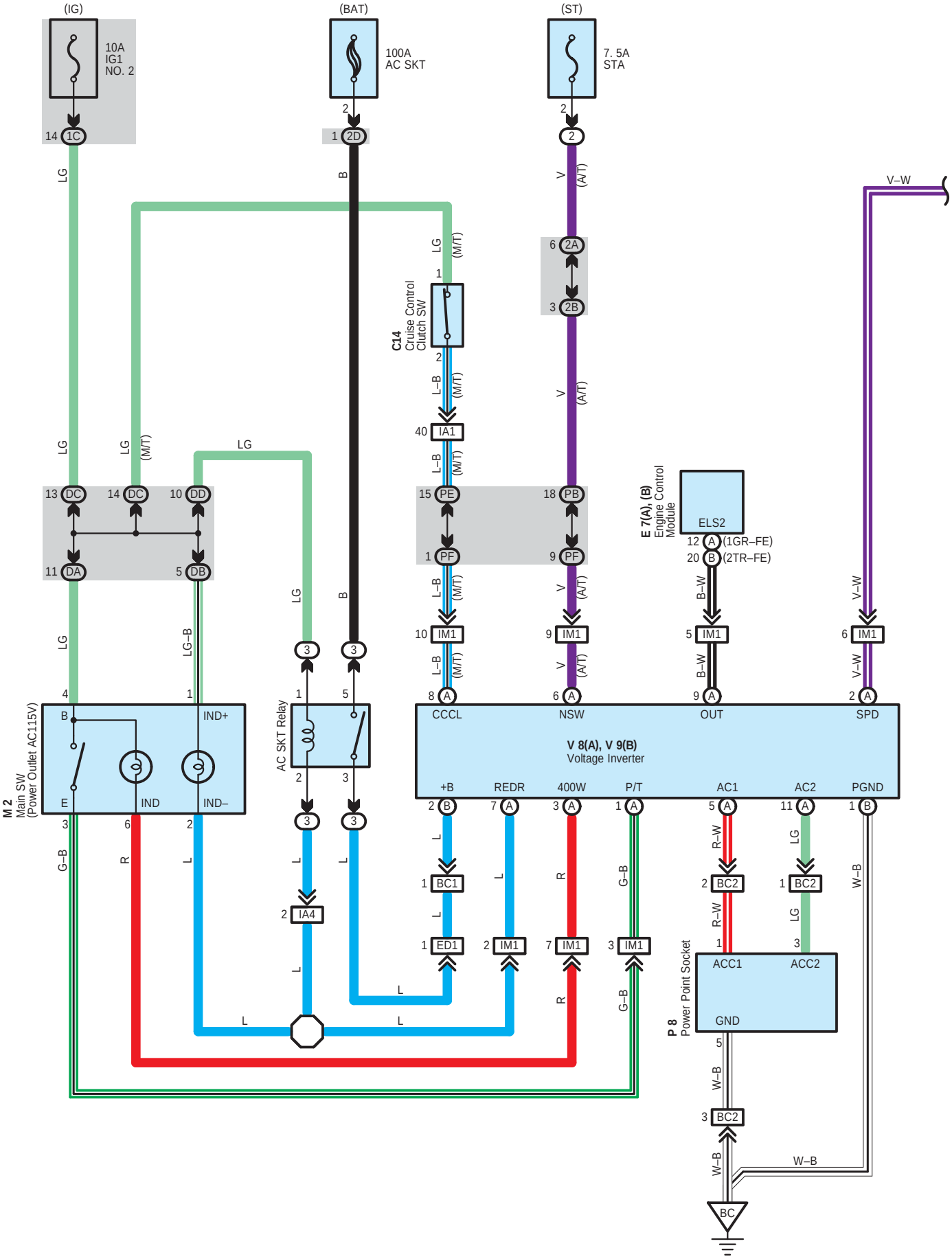

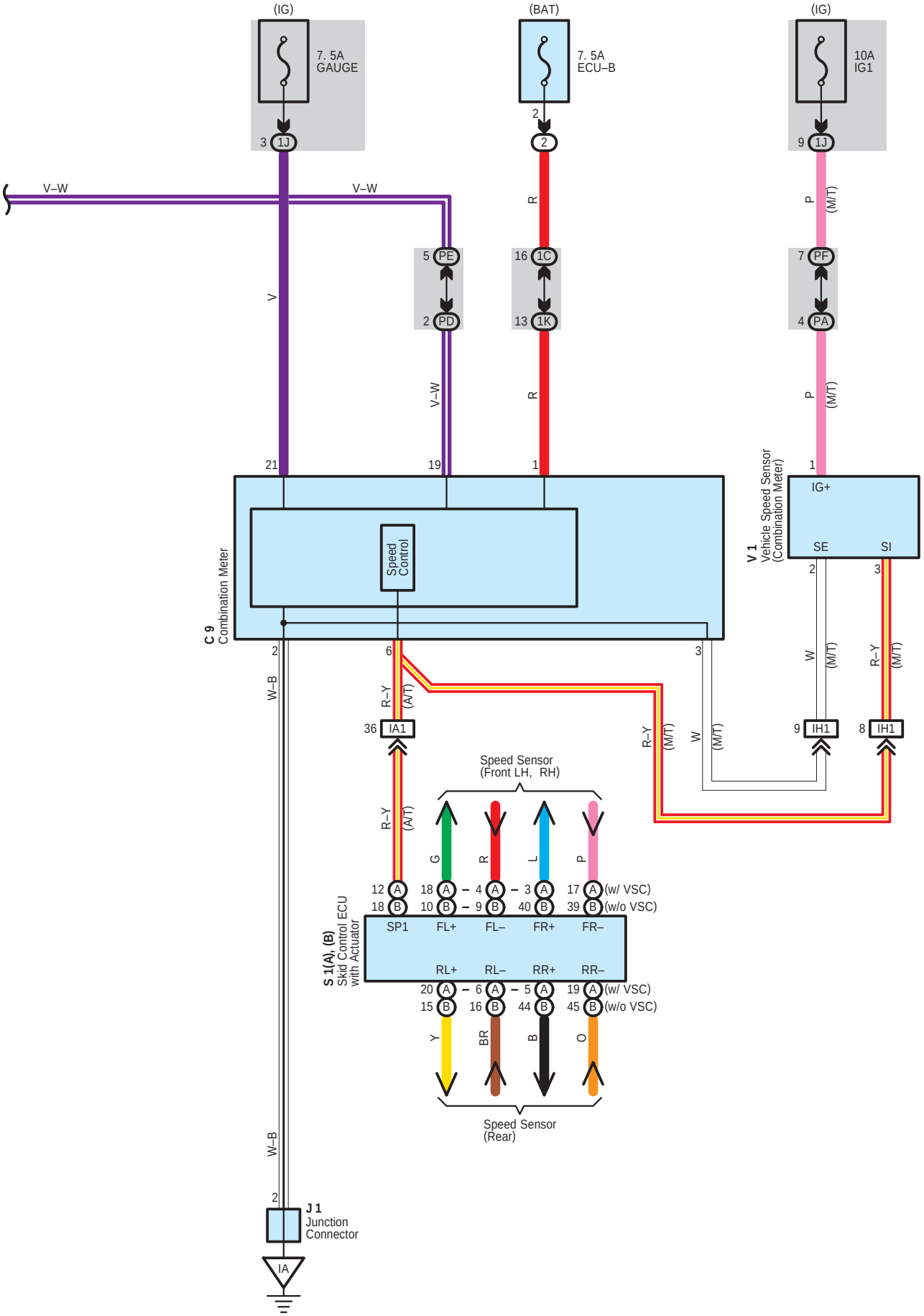
(IG)
7. 5A
GAUGE
3 1J
(BAT)
7. 5A
ECU–B
2
2
(IG)
10A
IG1
9 1J
V–W
V–W
V
R
P
(M/T)
5 PE
2 PD
16 1C
13 1K
7 PF
4 PA
V–W
R
P
(M/T)
21
19
1
1
C 9
Combination Meter
Speed
Control
V 1
Vehicle Speed Sensor
(Combination Meter)
IG+
SE
SI
2
3
W
(M/T)
R–Y
(M/T)
2
6
3
W–B
R–Y
(A/T)
36 IA1
R–Y
(M/T)
W
(M/T)
9 IH1
8 IH1
Speed Sensor
(Front LH, RH)
R–Y
(A/T)
G
R
L
P
12 A
18 B
18 A
10 B
4 A
9 B
3 A
40 B
17 A
39 B
(w/ VSC)
(w/o VSC)
S 1(A), (B)
Skid Control ECU
with Actuator
SP1
FL+
FL–
FR+
FR–
RL+
RL–
RR+
RR–
20 A
15 B
6 A
16 B
5 A
44 B
19 A
45 B
(w/ VSC)
(w/o VSC)
Y
BR
B
O
Speed Sensor
(Rear)
W–B
2
J 1
Junction
Connector
IA

Power Outlet for 115V

: Parts Location

Code		See Page	Code		See Page	Code		See Page
C9		44	P8		47 (*1)	V8	A	47 (*1)
C14		44			48 (*2)			48 (*2)
E7	A	44	S1	A	41 (1GR–FE)	V9	B	47 (*1)
	B	44		B	43 (2TR–FE)			48 (*2)
J1		45	V1		41 (1GR–FE)			
M2		45			43 (2TR–FE)			

: Relay Blocks

Code	See Page	Relay Blocks (Relay Block Location)
2	24	Engine Room R/B (Engine Compartment Left)
3	23	Engine Room R/B No.2 (Engine Compartment Left)

: Junction Block and Wire Harness Connector

Code	See Page	Junction Block and Wire Harness (Connector Location)
1C	28	Engine Room Main Wire and Driver Side J/B (Lower Finish Panel)
1J	29	Instrument Panel Wire and Driver Side J/B (Lower Finish Panel)
1K		
2A	24	Engine Room J/B (Engine Compartment Left)
2B	24	Engine Wire and Engine Room J/B (Engine Compartment Left)
2D	24	Engine Room Main Wire and Engine Room J/B (Engine Compartment Left)
DA	34	Instrument Panel Wire and Instrument Panel J/B No.1 (Left Kick Panel)
DB		
DC	34	Engine Room Main Wire and Instrument Panel J/B No.1 (Left Kick Panel)
DD		
PA	36	Engine Wire and Instrument Panel J/B No.2 (Right Side of Glove Box)
PB		
PD	36	Instrument Panel Wire and Instrument Panel J/B No.2 (Right Side of Glove Box)
PE		
PF		

: Connector Joining Wire Harness and Wire Harness

Code	See Page	Joining Wire Harness and Wire Harness (Connector Location)
ED1	52 (1GR–FE)	Frame No.2 Wire and Engine Room Main Wire (Front Fender Apron RH)
	53 (2TR–FE)	
IA1	54	Instrument Panel Wire and Engine Room Main Wire (Left Kick Panel)
IA4		
IH1	55	Engine Wire and Instrument Panel Wire (Right Side of Glove Box)
IM1	55	Floor No.3 Wire and Instrument Panel Wire (Under the Console Box)
BC1	56 (*1)	Frame No.2 Wire and Floor No.3 Wire (Floor Seat Cross Member RH)
	57 (*2)	
BC2	56 (*1)	
	57 (*2)	

: Ground Points

Code	See Page	Ground Points Location
IA	54	Left Kick Panel
BC	56 (*1)	Near the Voltage Inverter
	57 (*2)	

* 1 : Double Cab * 2 : Access Cab * 3 : Regular Cab * 4 : Separate Seat * 5 : Bench Seat

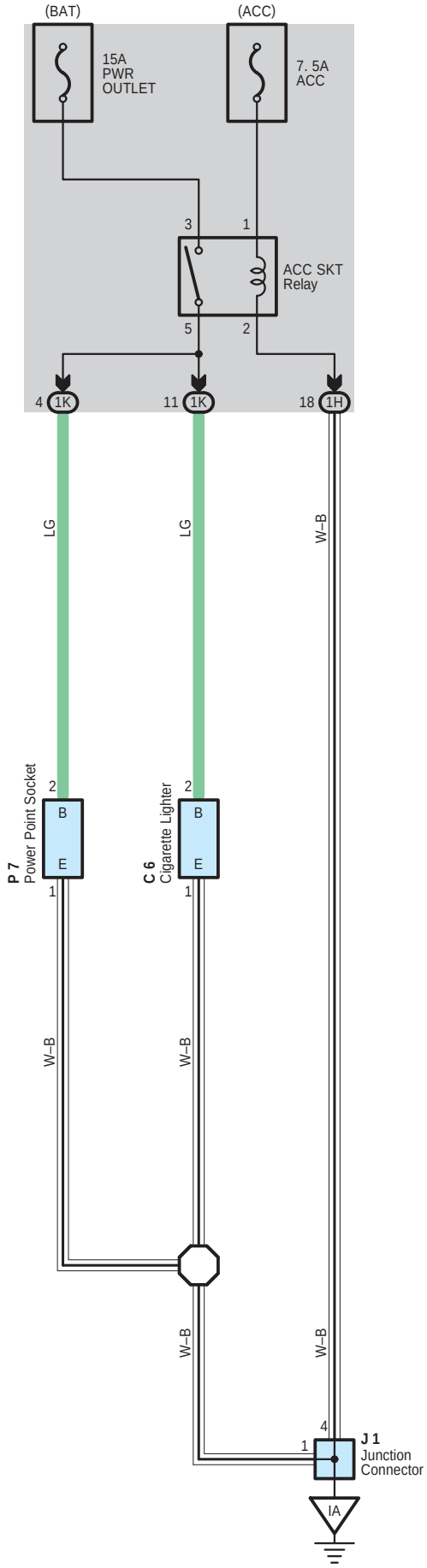
(BAT)
(ACC)
15A
PWR
OUTLET
7. 5A
ACC
3
1
ACC SKT
Relay
5
2
4 1K
11 1K
18 1H
LG
LG
W–B
2
B
E
1
P 7
Power Point Socket
2
B
E
1
C 6
Cigarette Lighter
W–B
W–B
W–B
4
1
J 1
Junction
Connector
IA

○ : Parts Location

Code	See Page	Code	See Page	Code	See Page
C6	44	J1	45	P7	45

: Junction Block and Wire Harness Connector

Code	See Page	Junction Block and Wire Harness (Connector Location)
1H	29	Instrument Panel Wire and Driver Side J/B (Lower Finish Panel)
1K		

▽ : Ground Points

Code	See Page	Ground Points Location
IA	54	Left Kick Panel

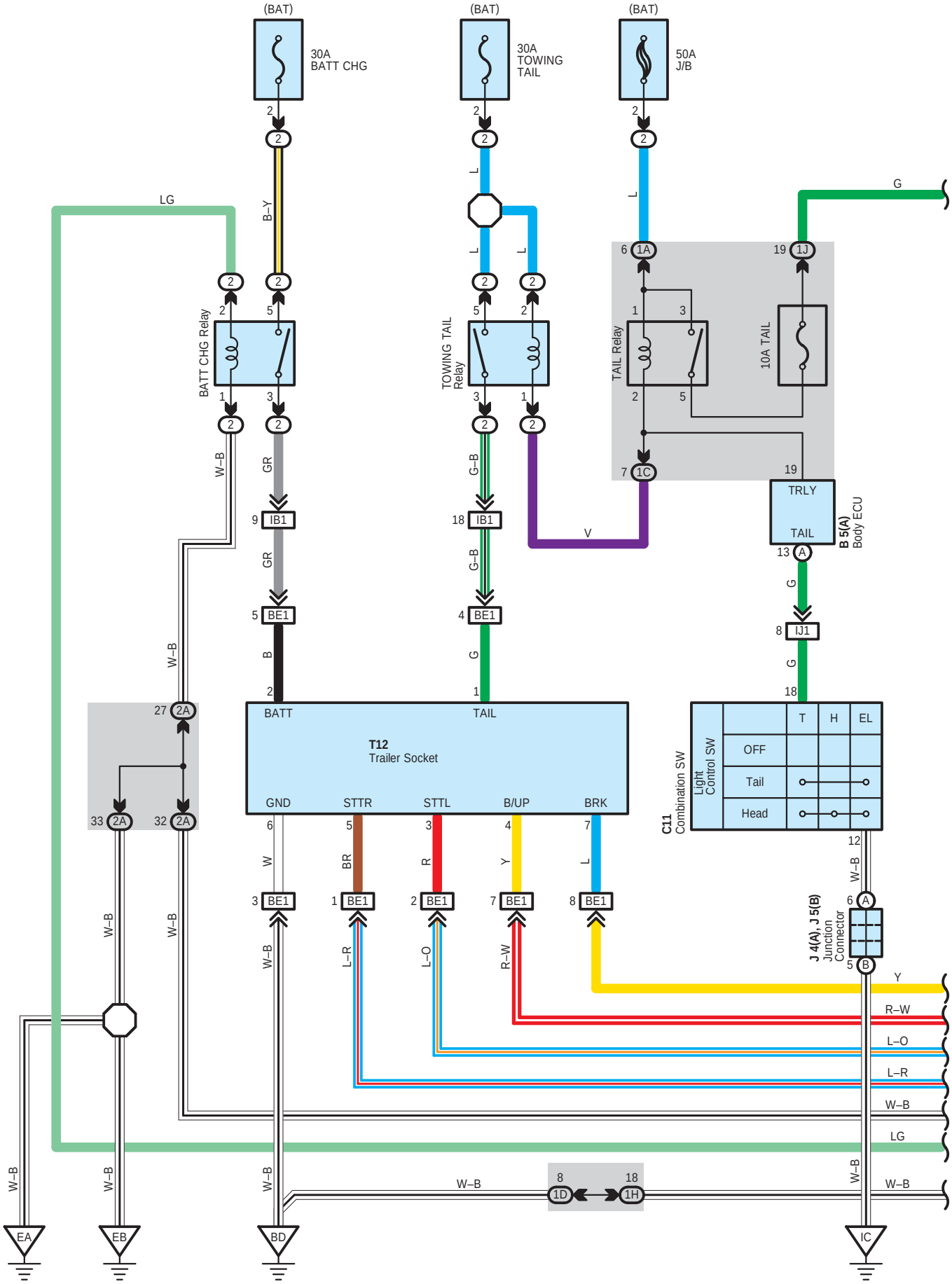
(BAT)
30A
BATT CHG
(BAT)
30A
TOWING
TAIL
(BAT)
50A
J/B
BATT CHG Relay
TOWING TAIL
Relay
TAIL Relay
10A TAIL
LG
G
B–Y
W–B
GR
G–B
V
L
TRLY
TAIL
B 5(A)
Body ECU
T12
Trailer Socket
BATT
TAIL
GND
STTR
STTL
B/UP
BRK
C11
Combination SW
Light
Control SW
OFF
Tail
Head
T
H
EL
J 4(A), J 5(B)
Junction
Connector
W
BR
R
Y
L
L–R
L–O
R–W
EA
EB
BD
IC
1D
1H

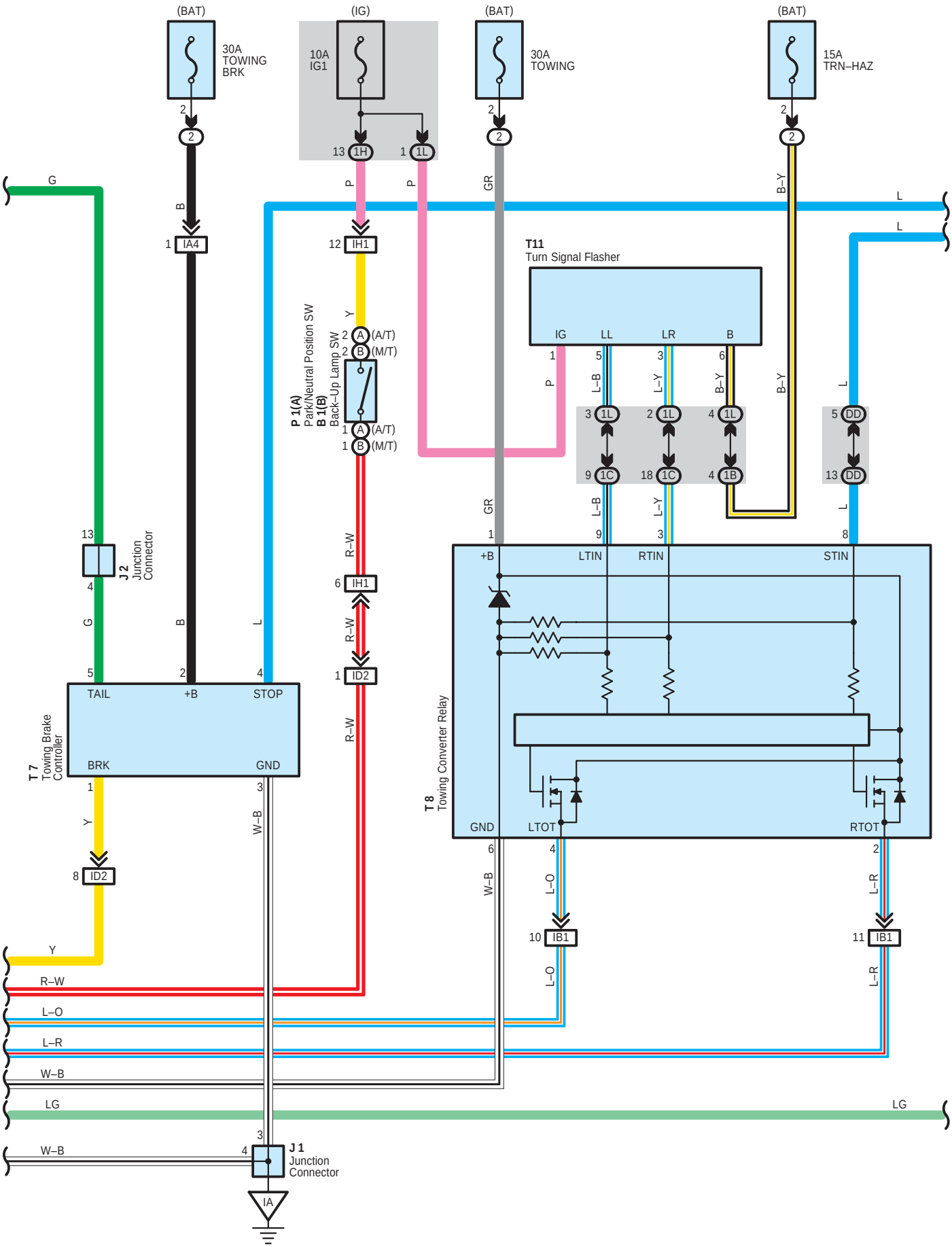
(BAT)
30A
TOWING
BRK
(IG)
10A
IG1
(BAT)
30A
TOWING
(BAT)
15A
TRN–HAZ
IA4
IH1
1H
1L
2
B
P
GR
B–Y
L
G
Y
R–W
L–B
L–Y
T11
Turn Signal Flasher
IG
LL
LR
B
P 1(A)
B 1(B)
Park/Neutral Position SW
Back–Up Lamp SW
(A/T)
(M/T)
1C
1B
DD
J 2
Junction
Connector
T 7
Towing Brake
Controller
TAIL
+B
STOP
BRK
GND
ID2
W–B
T 8
Towing Converter Relay
LTIN
RTIN
STIN
LTOT
RTOT
IB1
L–O
L–R
LG
J 1
Junction
Connector
IA

＊1 : w/ VSC
＊2 : w/o VSC

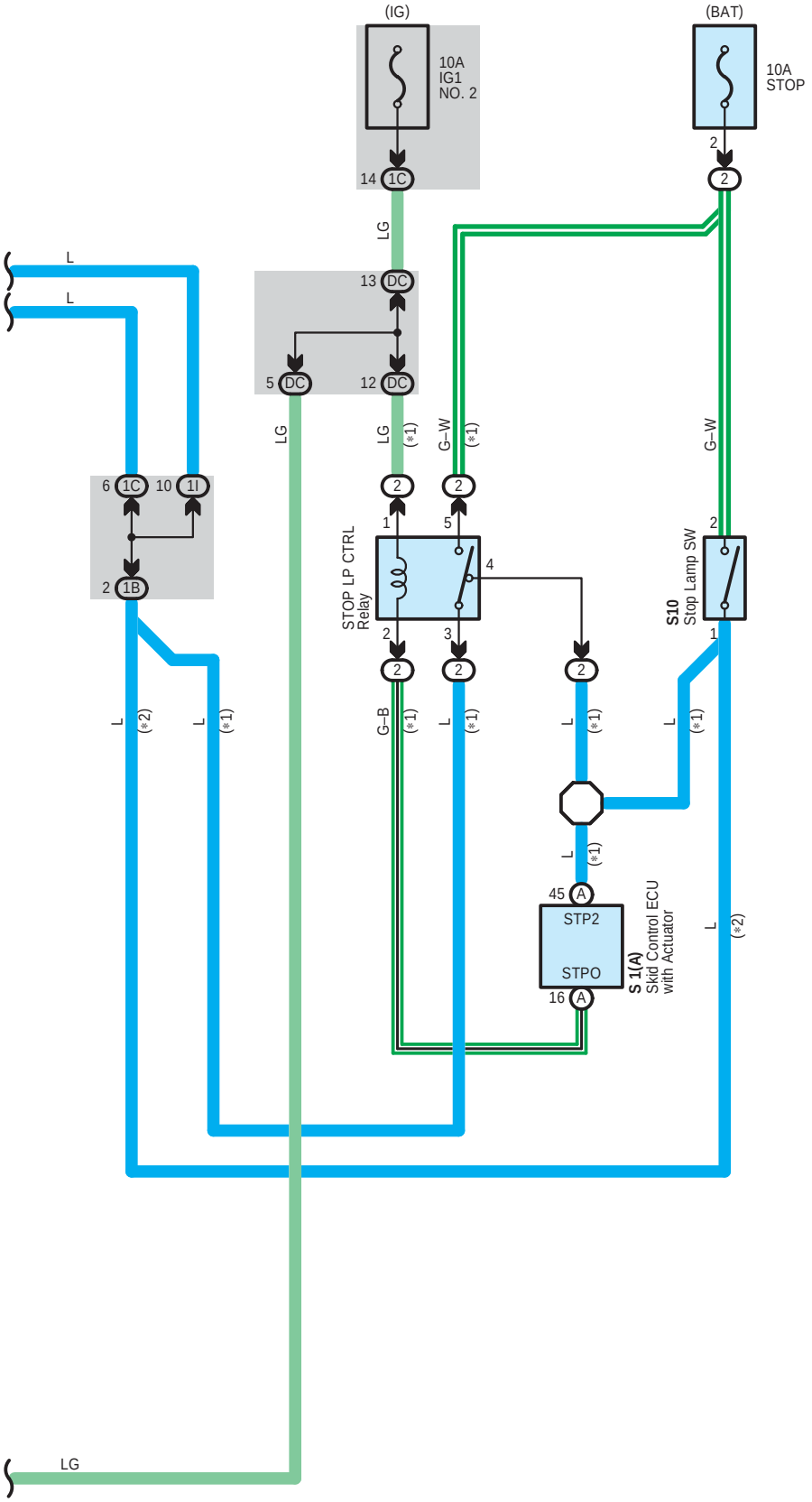

: Parts Location

Code		See Page	Code		See Page	Code	See Page
B1	B	40 (1GR–FE)	J4	A	45	S10	45
		42 (2TR–FE)	J5	B	45	T7	45
B5	A	44	P1	A	41 (1GR–FE)	T8	45
C11		44			43 (2TR–FE)	T11	45
J1		45	S1	A	41 (1GR–FE)	T12	47 (*1)
J2		45			43 (2TR–FE)		48 (*2)

: Relay Blocks

Code	See Page	Relay Blocks (Relay Block Location)
2	24	Engine Room R/B (Engine Compartment Left)

: Junction Block and Wire Harness Connector

Code	See Page	Junction Block and Wire Harness (Connector Location)
1A	28	Engine Room Main Wire and Driver Side J/B (Lower Finish Panel)
1B		
1C		
1D	28	Frame Wire and Driver Side J/B (Lower Finish Panel)
1H	29	Instrument Panel Wire and Driver Side J/B (Lower Finish Panel)
1I		
1J		
1L	29	Relay Wire and Driver Side J/B (Lower Finish Panel)
2A	24	Engine Room J/B (Engine Compartment Left)
DC	34	Engine Room Main Wire and Instrument Panel J/B No.1 (Left Kick Panel)
DD		

: Connector Joining Wire Harness and Wire Harness

Code	See Page	Joining Wire Harness and Wire Harness (Connector Location)
IA4	54	Instrument Panel Wire and Engine Room Main Wire (Left Kick Panel)
IB1	54	Frame Wire and Engine Room Main Wire (Left Kick Panel)
ID2	54	Frame Wire and Instrument Panel Wire (Left Kick Panel)
IH1	55	Engine Wire and Instrument Panel Wire (Right Side of Glove Box)
IJ1	55	Instrument Panel Wire and Instrument Panel Wire (Right Kick Panel)
BE1	56 (*1)	Frame No.3 Wire and Frame Wire (Behind the Trailer Socket)
	57 (*2)	

: Ground Points

Code	See Page	Ground Points Location
EA	52 (1GR–FE)	Front Right Fender
	53 (2TR–FE)	
EB	52 (1GR–FE)	Front Left Fender
	53 (2TR–FE)	
IA	54	Left Kick Panel
IC	54	Instrument Panel Brace RH
BD	56 (*1)	Near the Rear Differential
	57 (*2)	

* 1 : Double Cab * 2 : Access Cab * 3 : Regular Cab * 4 : Separate Seat * 5 : Bench Seat

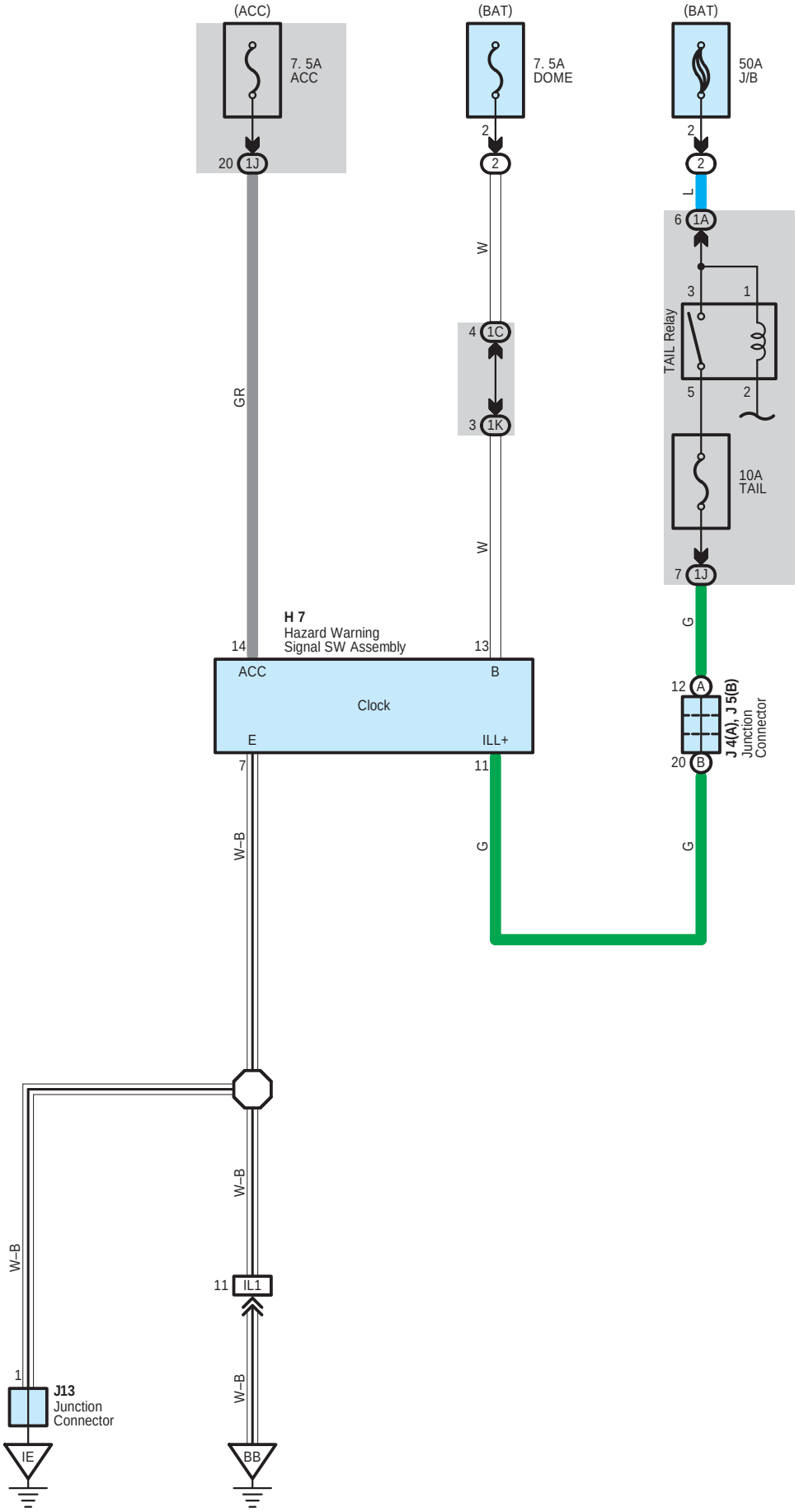
(ACC)
7. 5A
ACC
20
1J
GR
(BAT)
7. 5A
DOME
2
2
W
4
1C
3
1K
W
(BAT)
50A
J/B
2
2
L
6
1A
3
1
TAIL Relay
5
2
10A
TAIL
7
1J
G
H 7
Hazard Warning
Signal SW Assembly
14
ACC
13
B
Clock
E
ILL+
7
11
W–B
G
12
A
20
B
J 4(A), J 5(B)
Junction
Connector
G
W–B
W–B
11
IL1
W–B
1
J13
Junction
Connector
IE
BB

: Parts Location

Code	See Page	Code	See Page	Code	See Page
H7	45	J5 B	45		
J4 A	45	J13	45		

: Relay Blocks

Code	See Page	Relay Blocks (Relay Block Location)
2	24	Engine Room R/B (Engine Compartment Left)

: Junction Block and Wire Harness Connector

Code	See Page	Junction Block and Wire Harness (Connector Location)
1A	28	Engine Room Main Wire and Driver Side J/B (Lower Finish Panel)
1C		
1J	29	Instrument Panel Wire and Driver Side J/B (Lower Finish Panel)
1K		

: Connector Joining Wire Harness and Wire Harness

Code	See Page	Joining Wire Harness and Wire Harness (Connector Location)
IL1	55	Instrument Panel Wire and Floor Wire (Right Kick Panel)

: Ground Points

Code	See Page	Ground Points Location
IE	54	Right Kick Panel
BB	56 (*1)	Floor Seat Cross Member RH
	57 (*2)	
	58 (*3)	

* 1 : Double Cab * 2 : Access Cab * 3 : Regular Cab * 4 : Separate Seat * 5 : Bench Seat

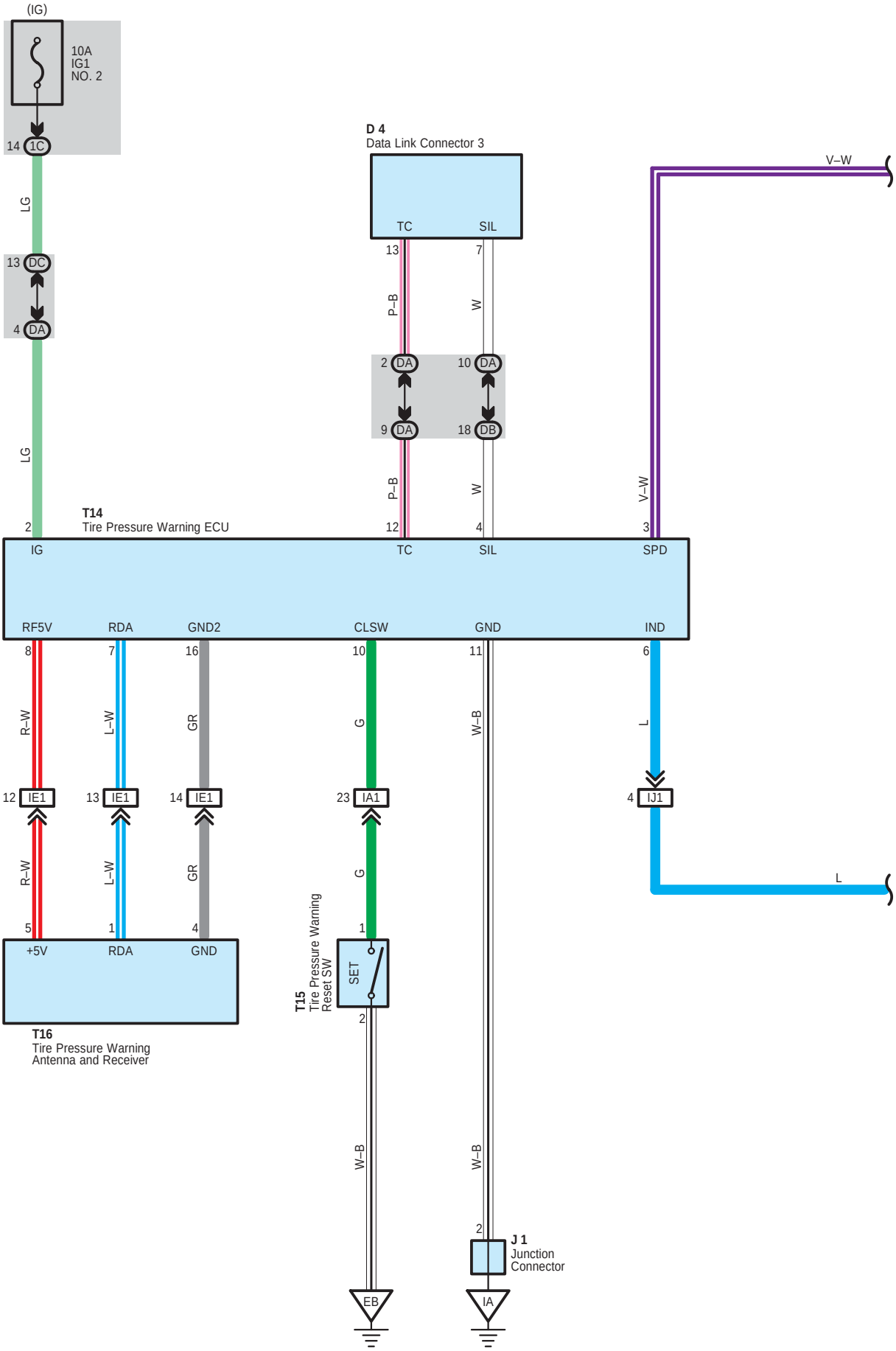
(IG)
10A
IG1
NO. 2
14 1C
LG
13 DC
4 DA
LG
2
D 4
Data Link Connector 3
TC
SIL
13
7
P–B
W
2 DA
10 DA
9 DA
18 DB
P–B
W
12
4
V–W
V–W
3
T14
Tire Pressure Warning ECU
IG
TC
SIL
SPD
RF5V
RDA
GND2
CLSW
GND
IND
8
7
16
10
11
6
R–W
L–W
GR
G
W–B
L
12 IE1
13 IE1
14 IE1
23 IA1
4 IJ1
R–W
L–W
GR
G
L
5
1
4
1
+5V
RDA
GND
SET
T15
Tire Pressure Warning
Reset SW
2
T16
Tire Pressure Warning
Antenna and Receiver
W–B
W–B
2
J 1
Junction
Connector
EB
IA

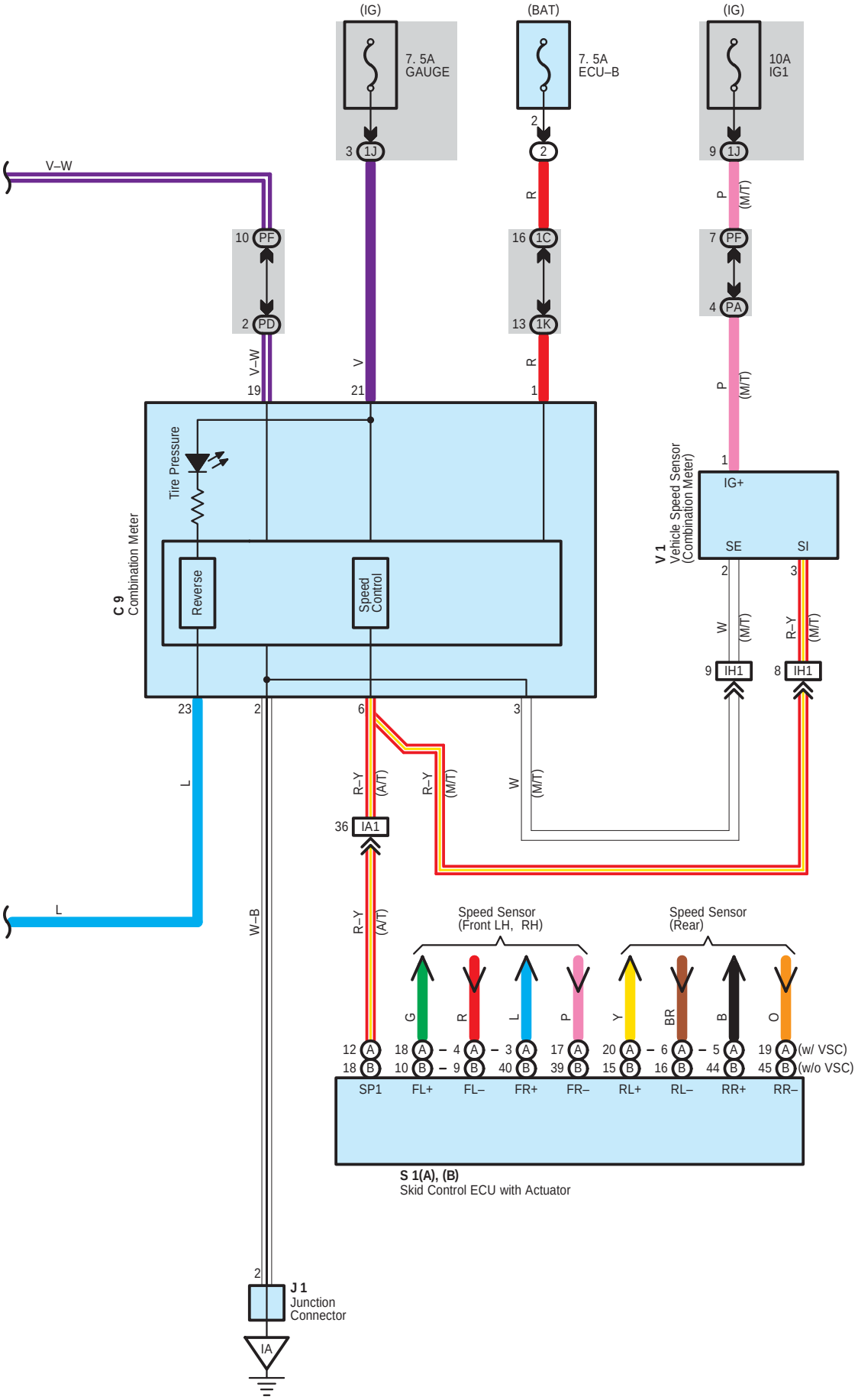
(IG)
7. 5A
GAUGE
(BAT)
7. 5A
ECU–B
(IG)
10A
IG1
V–W
10 PF
2 PD
3 1J
2
2
16 1C
13 1K
9 1J
7 PF
4 PA
R
P
(M/T)
P
(M/T)
V–W
19
V
21
R
1
1
IG+
SE
SI
V 1
Vehicle Speed Sensor
(Combination Meter)
2
3
W
(M/T)
R–Y
(M/T)
9 IH1
8 IH1
C 9
Combination Meter
Tire Pressure
Reverse
Speed
Control
23
2
6
3
L
R–Y
(A/T)
R–Y
(M/T)
W
(M/T)
36 IA1
L
W–B
R–Y
(A/T)
Speed Sensor
(Front LH, RH)
Speed Sensor
(Rear)
G
R
L
P
Y
BR
B
O
12 A
18 B
18 A
10 B
4 A
9 B
3 A
40 B
17 A
39 B
20 A
15 B
6 A
16 B
5 A
44 B
19 A
45 B
(w/ VSC)
(w/o VSC)
SP1
FL+
FL–
FR+
FR–
RL+
RL–
RR+
RR–
S 1(A), (B)
Skid Control ECU with Actuator
2
J 1
Junction
Connector
IA

Tire Pressure Warning System

System Outline

The air pressure sensor installed in the tire wheel detects the tire air pressure and transmits signals to the vehicle side receiver. When the detected tire air pressure is below a specified level, the warning light in the combination meter comes on to inform the driver.
Press the tire pressure warning reset SW for 3 seconds with the ignition SW at ON position after the tire pressure is adjusted to the specified value. It will lead the tire pressure warning ECU to control and warn the pressure according to the specified value.
Warnings when the tire pressure is low
* When the tire air pressure is below a specified level, the warning light in the combination meter comes on.

: Parts Location

Code	See Page	Code	See Page	Code	See Page
C9	44	S1 B	41 (1GR–FE)	T16	48 (*2)
D4	44		43 (2TR–FE)		49 (*3)
J1	45	T14	45	V1	41 (1GR–FE)
S1 A	41 (1GR–FE)	T15	45		43 (2TR–FE)
	43 (2TR–FE)	T16	47 (*1)		

: Relay Blocks

Code	See Page	Relay Blocks (Relay Block Location)
2	24	Engine Room R/B (Engine Compartment Left)

: Junction Block and Wire Harness Connector

Code	See Page	Junction Block and Wire Harness (Connector Location)
1C	28	Engine Room Main Wire and Driver Side J/B (Lower Finish Panel)
1J	29	Instrument Panel Wire and Driver Side J/B (Lower Finish Panel)
1K		
DA	34	Instrument Panel Wire and Instrument Panel J/B No.1 (Left Kick Panel)
DB		
DC	34	Engine Room Main Wire and Instrument Panel J/B No.1 (Left Kick Panel)
PA	36	Engine Wire and Instrument Panel J/B No.2 (Right Side of Glove Box)
PD	36	Instrument Panel Wire and Instrument Panel J/B No.2 (Right Side of Glove Box)
PF		

: Connector Joining Wire Harness and Wire Harness

Code	See Page	Joining Wire Harness and Wire Harness (Connector Location)
IA1	54	Instrument Panel Wire and Engine Room Main Wire (Left Kick Panel)
IE1	54	Instrument Panel Wire and Floor No.2 Wire (Left Kick Panel)
IH1	55	Engine Wire and Instrument Panel Wire (Right Side of Glove Box)
IJ1	55	Instrument Panel Wire and Instrument Panel Wire (Right Kick Panel)

: Ground Points

Code	See Page	Ground Points Location
EB	52 (1GR–FE)	Front Left Fender
	53 (2TR–FE)	
IA	54	Left Kick Panel

* 1 : Double Cab * 2 : Access Cab * 3 : Regular Cab * 4 : Separate Seat * 5 : Bench Seat

Audio System for Separate Type Amplifier

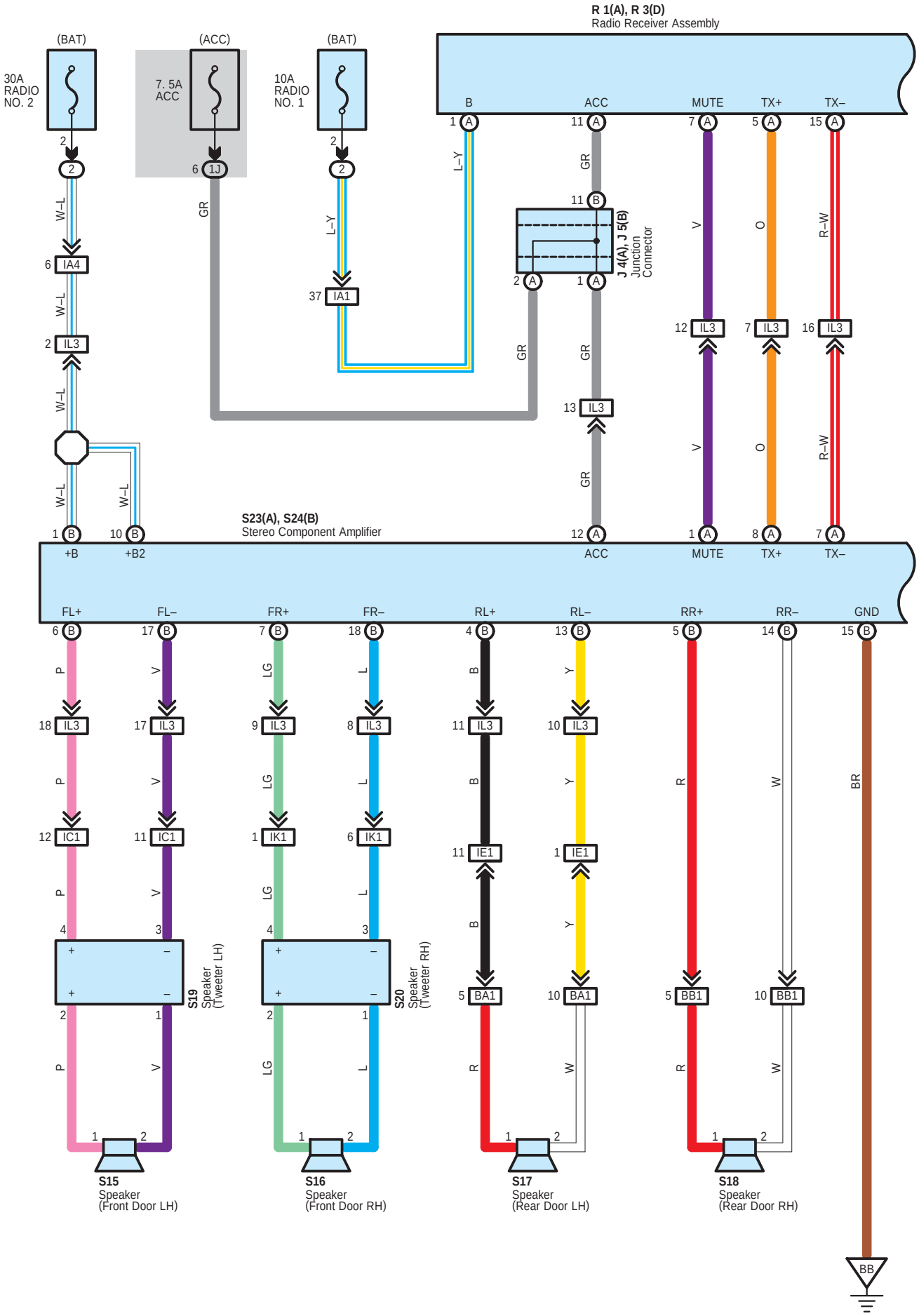

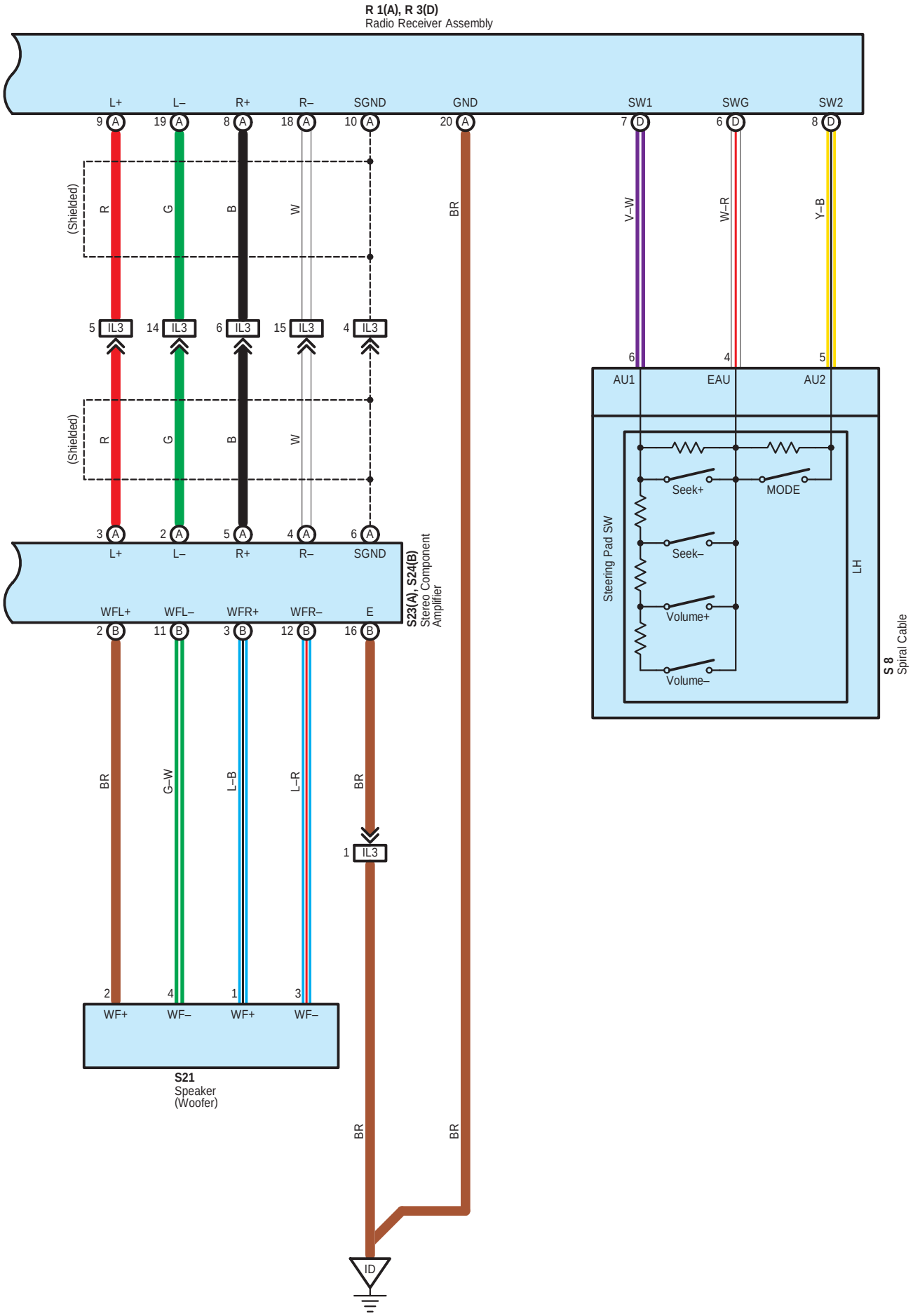
R 1(A), R 3(D)
Radio Receiver Assembly
L+
L–
R+
R–
SGND
GND
SW1
SWG
SW2
9 A
19 A
8 A
18 A
10 A
20 A
7 D
6 D
8 D
(Shielded)
R
G
B
W
BR
V–W
W–R
Y–B
5 IL3
14 IL3
6 IL3
15 IL3
4 IL3
6
4
5
AU1
EAU
AU2
Seek+
MODE
Seek–
Volume+
Volume–
Steering Pad SW
LH
S 8
Spiral Cable
3 A
2 A
5 A
4 A
6 A
L+
L–
R+
R–
SGND
S23(A), S24(B)
Stereo Component
Amplifier
WFL+
WFL–
WFR+
WFR–
E
2 B
11 B
3 B
12 B
16 B
BR
G–W
L–B
L–R
BR
1 IL3
2
4
1
3
WF+
WF–
WF+
WF–
S21
Speaker
(Woofer)
BR
BR
ID

Audio System for Separate Type Amplifier

: Parts Location

Code		See Page	Code	See Page	Code		See Page
J4	A	45	S15	47 (*1)	S20		47 (*1)
J5	B	45	S16	47 (*1)	S21		47 (*1)
R1	A	45	S17	47 (*1)	S23	A	47 (*1)
R3	D	45	S18	47 (*1)	S24	B	47 (*1)
S8		45	S19	47 (*1)			

: Relay Blocks

Code	See Page	Relay Blocks (Relay Block Location)
2	24	Engine Room R/B (Engine Compartment Left)

: Junction Block and Wire Harness Connector

Code	See Page	Junction Block and Wire Harness (Connector Location)
1J	29	Instrument Panel Wire and Driver Side J/B (Lower Finish Panel)

: Connector Joining Wire Harness and Wire Harness

Code	See Page	Joining Wire Harness and Wire Harness (Connector Location)
IA1 IA4	54	Instrument Panel Wire and Engine Room Main Wire (Left Kick Panel)
IC1	54	Front Door LH Wire and Instrument Panel Wire (Left Kick Panel)
IE1	54	Instrument Panel Wire and Floor No.2 Wire (Left Kick Panel)
IK1	55	Front Door RH Wire and Instrument Panel Wire (Right Kick Panel)
IL3	55	Instrument Panel Wire and Floor Wire (Right Kick Panel)
BA1	56 (*1)	Rear Door No.2 Wire and Floor No.2 Wire (Under the Left Center Pillar)
BB1	56 (*1)	Rear Door No.1 Wire and Floor Wire (Under the Right Center Pillar)

: Ground Points

Code	See Page	Ground Points Location
ID	54	Instrument Panel Brace RH
BB	56 (*1)	Floor Seat Cross Member RH

* 1 : Double Cab * 2 : Access Cab * 3 : Regular Cab * 4 : Separate Seat * 5 : Bench Seat

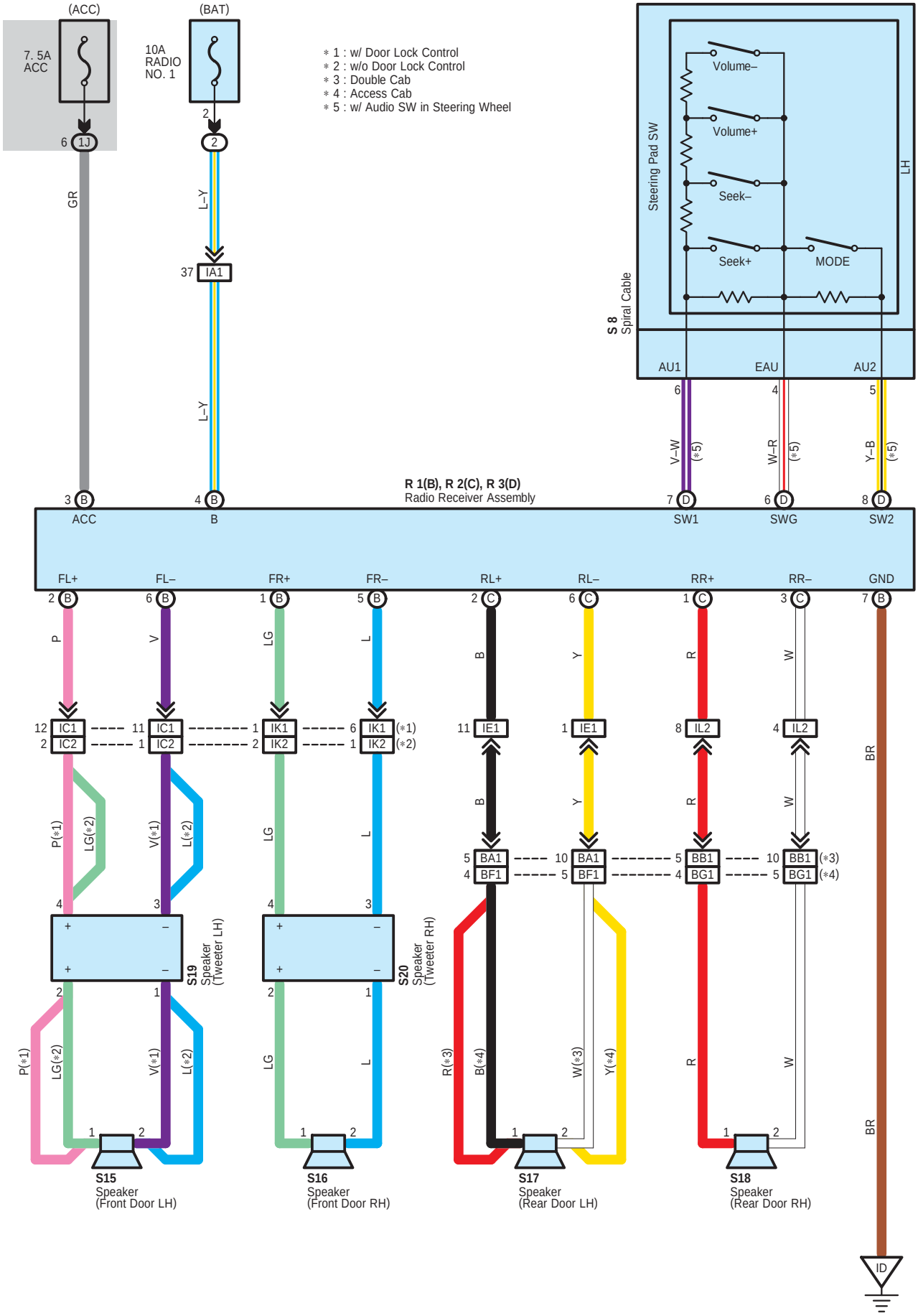
(ACC)
(BAT)
7. 5A
ACC
10A
RADIO
NO. 1
* 1 : w/ Door Lock Control
* 2 : w/o Door Lock Control
* 3 : Double Cab
* 4 : Access Cab
* 5 : w/ Audio SW in Steering Wheel
Steering Pad SW
Volume–
Volume+
Seek–
Seek+
MODE
LH
S 8
Spiral Cable
AU1
EAU
AU2
GR
L–Y
V–W
W–R
Y–B
(*5)
R 1(B), R 2(C), R 3(D)
Radio Receiver Assembly
ACC
B
SW1
SWG
SW2
FL+
FL–
FR+
FR–
RL+
RL–
RR+
RR–
GND
P
V
LG
L
B
Y
R
W
BR
IC1
IC2
IK1
IK2
IE1
IL2
BA1
BF1
BB1
BG1
(*1)
(*2)
(*3)
(*4)
P(*1)
LG(*2)
V(*1)
L(*2)
R(*3)
B(*4)
W(*3)
Y(*4)
S19
Speaker
(Tweeter LH)
S20
Speaker
(Tweeter RH)
S15
Speaker
(Front Door LH)
S16
Speaker
(Front Door RH)
S17
Speaker
(Rear Door LH)
S18
Speaker
(Rear Door RH)
ID

: Parts Location

Code		See Page	Code	See Page	Code	See Page
R1	B	45	S16	47 (*1)	S19	47 (*1)
R2	C	45		48 (*2)		48 (*2)
R3	D	45		49 (*3)		49 (*3)
S8		45	S17	47 (*1)	S20	47 (*1)
S15		47 (*1)		48 (*2)		48 (*2)
		48 (*2)	S18	47 (*1)		49 (*3)
		49 (*3)		48 (*2)		

: Relay Blocks

Code	See Page	Relay Blocks (Relay Block Location)
2	24	Engine Room R/B (Engine Compartment Left)

: Junction Block and Wire Harness Connector

Code	See Page	Junction Block and Wire Harness (Connector Location)
1J	29	Instrument Panel Wire and Driver Side J/B (Lower Finish Panel)

: Connector Joining Wire Harness and Wire Harness

Code	See Page	Joining Wire Harness and Wire Harness (Connector Location)
IA1	54	Instrument Panel Wire and Engine Room Main Wire (Left Kick Panel)
IC1	54	Front Door LH Wire and Instrument Panel Wire (Left Kick Panel)
IC2		
IE1	54	Instrument Panel Wire and Floor No.2 Wire (Left Kick Panel)
IK1	55	Front Door RH Wire and Instrument Panel Wire (Right Kick Panel)
IK2		
IL2	55	Instrument Panel Wire and Floor Wire (Right Kick Panel)
BA1	56 (*1)	Rear Door No.2 Wire and Floor No.2 Wire (Under the Left Center Pillar)
BB1	56 (*1)	Rear Door No.1 Wire and Floor Wire (Under the Right Center Pillar)
BF1	57 (*2)	Rear Door No.2 Wire and Floor No.2 Wire (Under the Left Quarter Panel)
BG1	57 (*2)	Rear Door No.1 Wire and Floor Wire (Under the Right Quarter Panel)

: Ground Points

Code	See Page	Ground Points Location
ID	54	Instrument Panel Brace RH

* 1 : Double Cab * 2 : Access Cab * 3 : Regular Cab * 4 : Separate Seat * 5 : Bench Seat

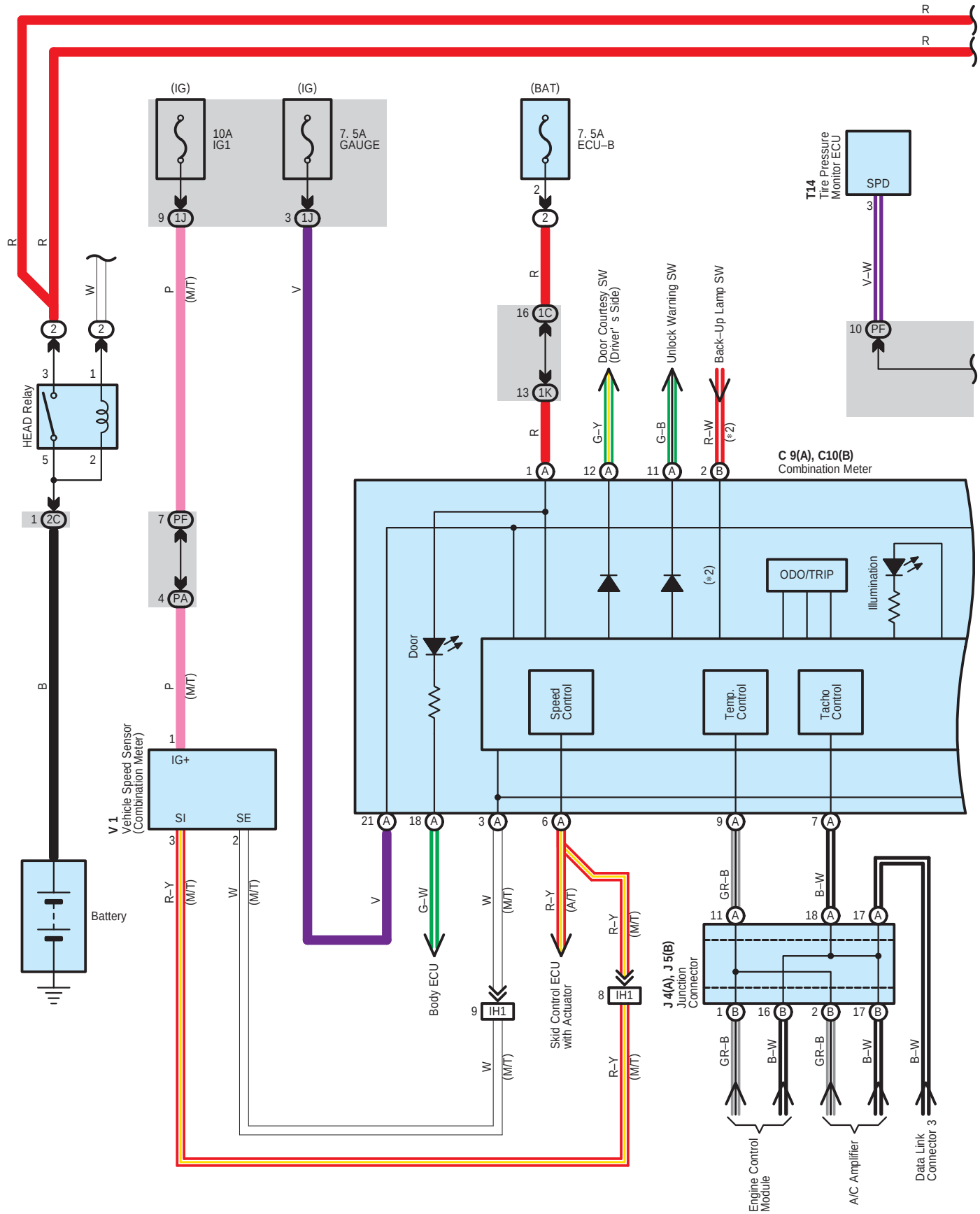
R
R
(IG)
10A
IG1
(IG)
7. 5A
GAUGE
(BAT)
7. 5A
ECU–B
T14
Tire Pressure
Monitor ECU
SPD
3
V–W
10 PF
9 1J
3 1J
2
2
R
16 1C
13 1K
R
Door Courtesy SW
(Driver' s Side)
Unlock Warning SW
Back–Up Lamp SW
G–Y
G–B
R–W
(*2)
1 A
12 A
11 A
2 B
C 9(A), C10(B)
Combination Meter
ODO/TRIP
Illumination
(*2)
Door
Speed
Control
Temp.
Control
Tacho
Control
21 A
18 A
3 A
6 A
9 A
7 A
W
2
HEAD Relay
3
1
5
2
1 2C
B
Battery
7 PF
4 PA
P
(M/T)
P
(M/T)
1
V 1
Vehicle Speed Sensor
(Combination Meter)
IG+
SI
SE
3
2
R–Y
(M/T)
W
(M/T)
V
G–W
W
(M/T)
R–Y
(A/T)
R–Y
(M/T)
Body ECU
9 IH1
8 IH1
W
(M/T)
R–Y
(M/T)
Skid Control ECU
with Actuator
J 4(A), J 5(B)
Junction
Connector
GR–B
B–W
11 A
18 A
17 A
1 B
16 B
2 B
17 B
GR–B
B–W
GR–B
B–W
B–W
Engine Control
Module
A/C Amplifier
Data Link
Connector 3

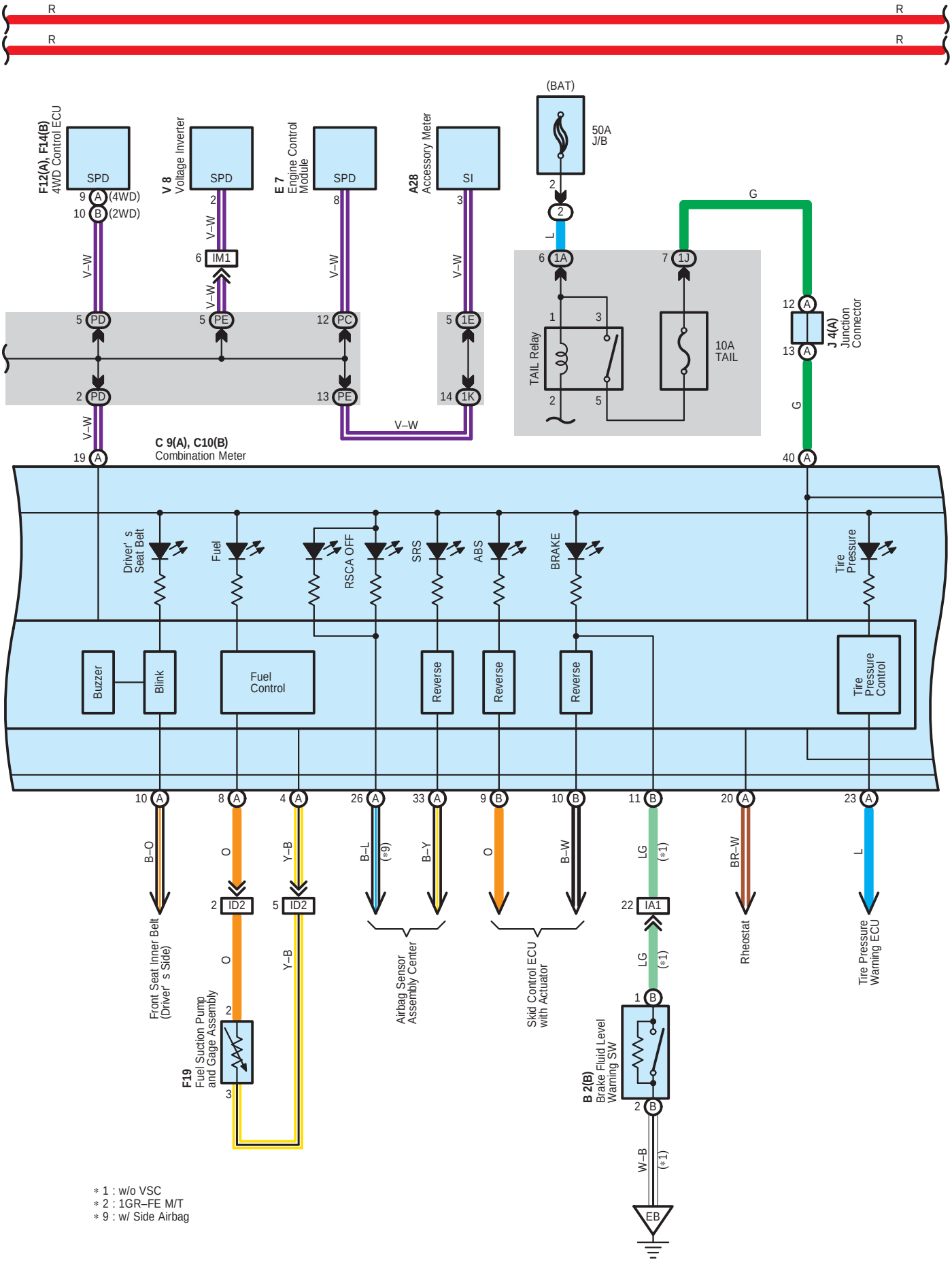
R
R
R
R
F12(A), F14(B)
4WD Control ECU
SPD
9 A (4WD)
10 B (2WD)
V 8
Voltage Inverter
SPD
2
6 IM1
E 7
Engine Control
Module
SPD
8
A28
Accessory Meter
SI
3
(BAT)
50A
J/B
2
2
L
G
6 1A
7 1J
1
3
2
5
TAIL Relay
10A
TAIL
12 A
13 A
J 4(A)
Junction
Connector
G
V–W
5 PD
2 PD
19 A
5 PE
12 PC
13 PE
5 1E
14 1K
C 9(A), C10(B)
Combination Meter
40 A
Driver' s
Seat Belt
Fuel
RSCA OFF
SRS
ABS
BRAKE
Tire
Pressure
Buzzer
Blink
Fuel
Control
Reverse
Reverse
Reverse
Tire
Pressure
Control
10 A
8 A
4 A
26 A
33 A
9 B
10 B
11 B
20 A
23 A
B–O
O
Y–B
B–L
(*9)
B–Y
O
B–W
LG
(*1)
BR–W
L
2 ID2
5 ID2
22 IA1
LG
(*1)
Front Seat Inner Belt
(Driver' s Side)
O
Y–B
Airbag Sensor
Assembly Center
Skid Control ECU
with Actuator
Rheostat
Tire Pressure
Warning ECU
F19
Fuel Suction Pump
and Gage Assembly
2
3
1 B
B 2(B)
Brake Fluid Level
Warning SW
2 B
W–B
(*1)
EB
* 1 : w/o VSC
* 2 : 1GR–FE M/T
* 9 : w/ Side Airbag

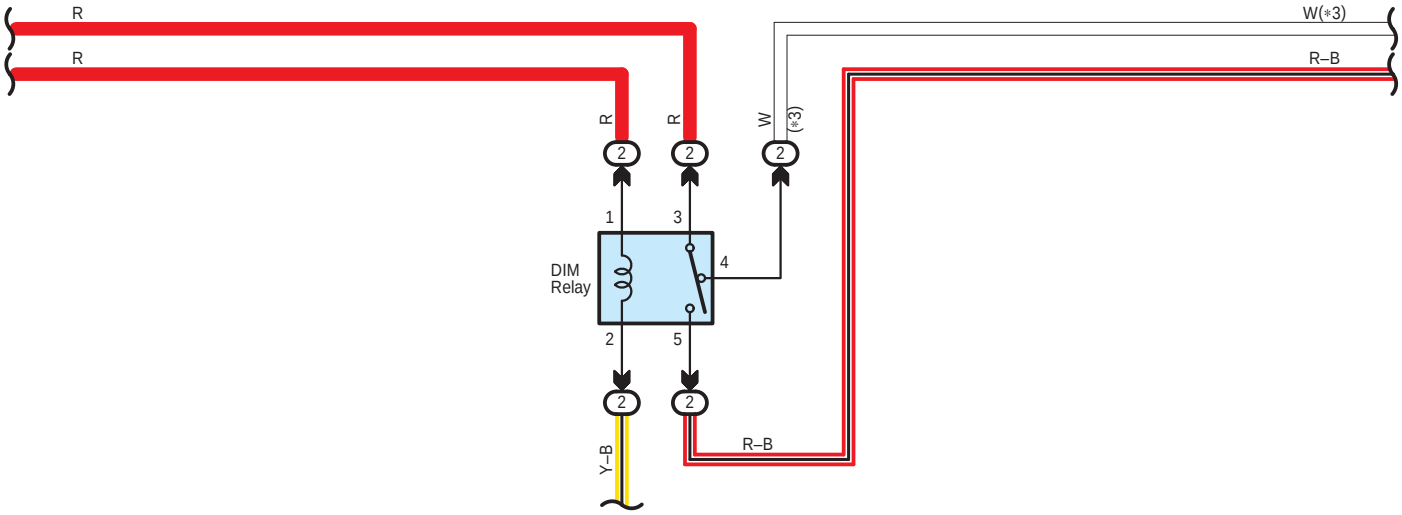
R
R
W(*3)
R–B
R
R
W
(*3)
2
2
2
1
3
DIM
Relay
4
2
5
2
2
Y–B
R–B

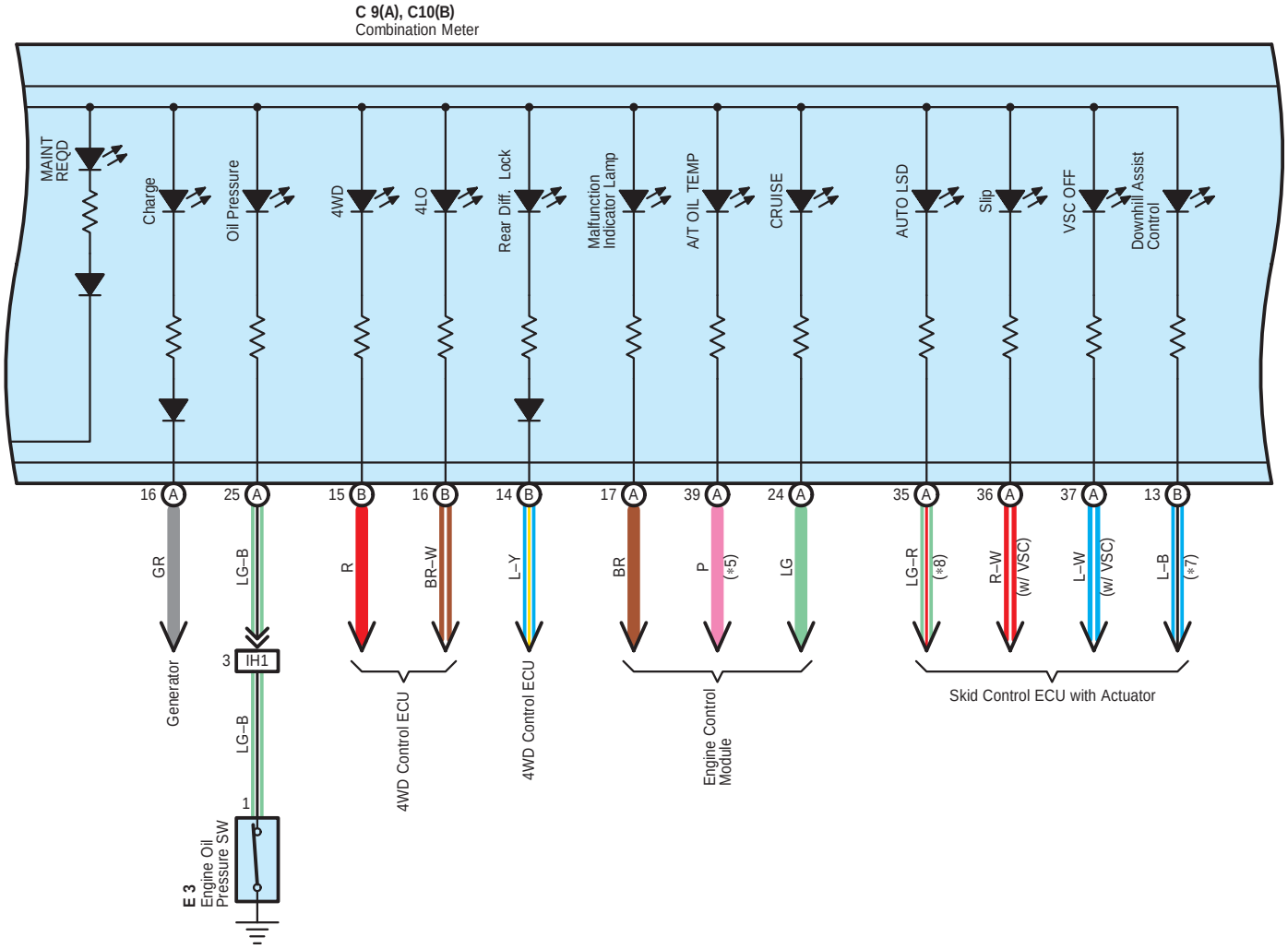
C 9(A), C10(B)
Combination Meter
MAINT REQD
Charge
Oil Pressure
4WD
4LO
Rear Diff. Lock
Malfunction Indicator Lamp
A/T OIL TEMP
CRUISE
AUTO LSD
Slip
VSC OFF
Downhill Assist Control
16 A
25 A
15 B
16 B
14 B
17 A
39 A
24 A
35 A
36 A
37 A
13 B
GR
LG–B
R
BR–W
L–Y
BR
P
(*5)
LG
LG–R
(*8)
R–W
(w/ VSC)
L–W
(w/ VSC)
L–B
(*7)
Generator
3 IH1
LG–B
1
E 3
Engine Oil Pressure SW
4WD Control ECU
4WD Control ECU
Engine Control Module
Skid Control ECU with Actuator

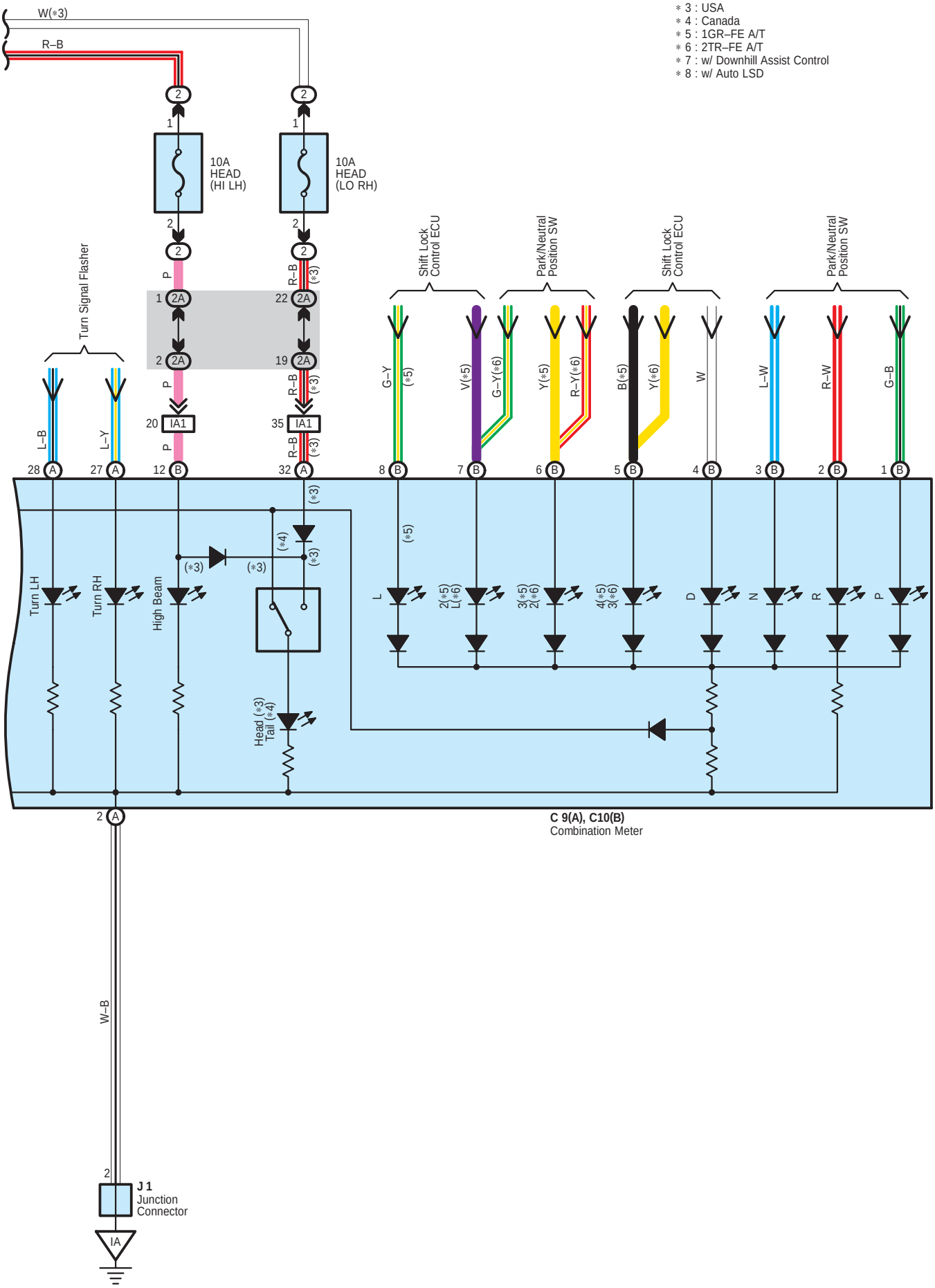
∗ 3 : USA
∗ 4 : Canada
∗ 5 : 1GR–FE A/T
∗ 6 : 2TR–FE A/T
∗ 7 : w/ Downhill Assist Control
∗ 8 : w/ Auto LSD
W(∗3)
R–B
10A HEAD (HI LH)
10A HEAD (LO RH)
Turn Signal Flasher
Shift Lock Control ECU
Park/Neutral Position SW
Shift Lock Control ECU
Park/Neutral Position SW
L–B
L–Y
P
R–B
G–Y (∗5)
V(∗5)
G–Y(∗6)
Y(∗5)
R–Y(∗6)
B(∗5)
Y(∗6)
W
L–W
R–W
G–B
IA1
Turn LH
Turn RH
High Beam
Head (∗3) Tail (∗4)
L
2(∗5) L(∗6)
3(∗5) 2(∗6)
4(∗5) 3(∗6)
D
N
R
P
C 9(A), C10(B)
Combination Meter
W–B
J 1
Junction Connector
IA

Combination Meter

: Parts Location

Code		See Page	Code		See Page	Code		See Page
A28		46 (*1)	E7		44	J5	B	45
		48 (*2)	F12	A	44	T14		45
B2	B	40 (1GR–FE)	F14	B	44	V1		41 (1GR–FE)
		42 (2TR–FE)	F19		46 (*1)			43 (2TR–FE)
C9	A	44			48 (*2)	V8		47 (*1)
C10	B	44			49 (*3)			48 (*2)
E3		40 (1GR–FE)	J1		45			
		42 (2TR–FE)	J4	A	45			

: Relay Blocks

Code	See Page	Relay Blocks (Relay Block Location)
2	24	Engine Room R/B (Engine Compartment Left)

: Junction Block and Wire Harness Connector

Code	See Page	Junction Block and Wire Harness (Connector Location)
1A	28	Engine Room Main Wire and Driver Side J/B (Lower Finish Panel)
1C		
1E	28	Roof Wire and Driver Side J/B (Lower Finish Panel)
1J	29	Instrument Panel Wire and Driver Side J/B (Lower Finish Panel)
1K		
2A	24	Engine Room J/B (Engine Compartment Left)
2C	24	Engine Room Main Wire and Engine Room J/B (Engine Compartment Left)
PA	36	Engine Wire and Instrument Panel J/B No.2 (Right Side of Glove Box)
PC	36	Instrument Panel Wire and Instrument Panel J/B No.2 (Right Side of Glove Box)
PD		
PE		
PF		

: Connector Joining Wire Harness and Wire Harness

Code	See Page	Joining Wire Harness and Wire Harness (Connector Location)
IA1	54	Instrument Panel Wire and Engine Room Main Wire (Left Kick Panel)
ID2	54	Frame Wire and Instrument Panel Wire (Left Kick Panel)
IH1	55	Engine Wire and Instrument Panel Wire (Right Side of Glove Box)
IM1	55	Floor No.3 Wire and Instrument Panel Wire (Under the Console Box)

: Ground Points

Code	See Page	Ground Points Location
EB	52 (1GR–FE)	Front Left Fender
	53 (2TR–FE)	
IA	54	Left Kick Panel

* 1 : Double Cab * 2 : Access Cab * 3 : Regular Cab * 4 : Separate Seat * 5 : Bench Seat

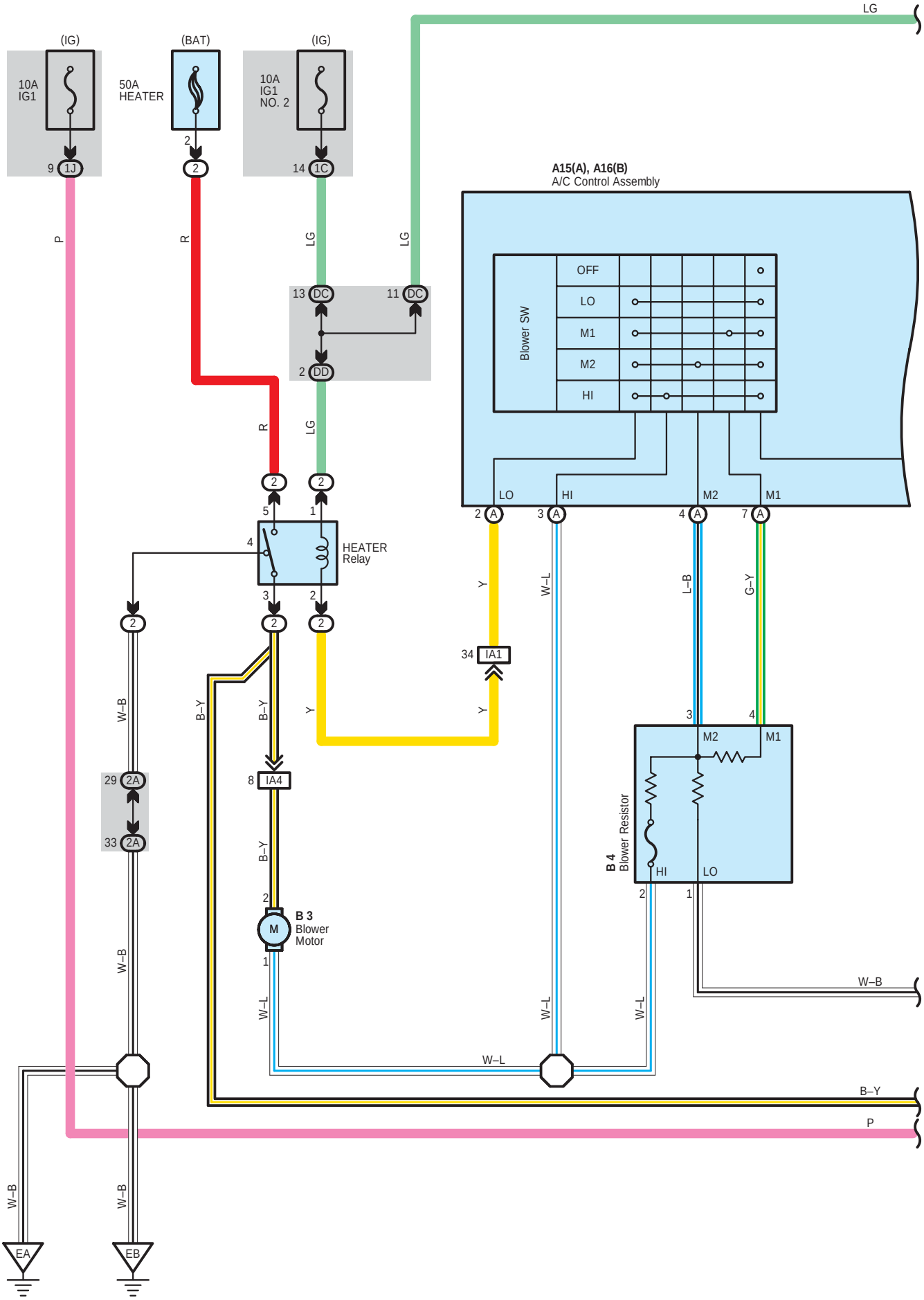
(IG)
10A
IG1
9 1J
(BAT)
50A
HEATER
2
2
(IG)
10A
IG1
NO. 2
14 1C
LG
A15(A), A16(B)
A/C Control Assembly
Blower SW
OFF
LO
M1
M2
HI
13 DC
11 DC
2 DD
P
R
LG
R
LG
2
2
5
1
4
HEATER
Relay
3
2
2
2
2
LO
HI
M2
M1
2 A
3 A
4 A
7 A
Y
W–L
L–B
G–Y
34 IA1
Y
Y
W–B
B–Y
B–Y
29 2A
33 2A
8 IA4
B–Y
2
B 3
Blower
Motor
M
1
W–L
W–L
W–L
W–L
3
4
M2
M1
B 4
Blower Resistor
HI
LO
2
1
W–B
W–B
W–B
B–Y
P
EA
EB

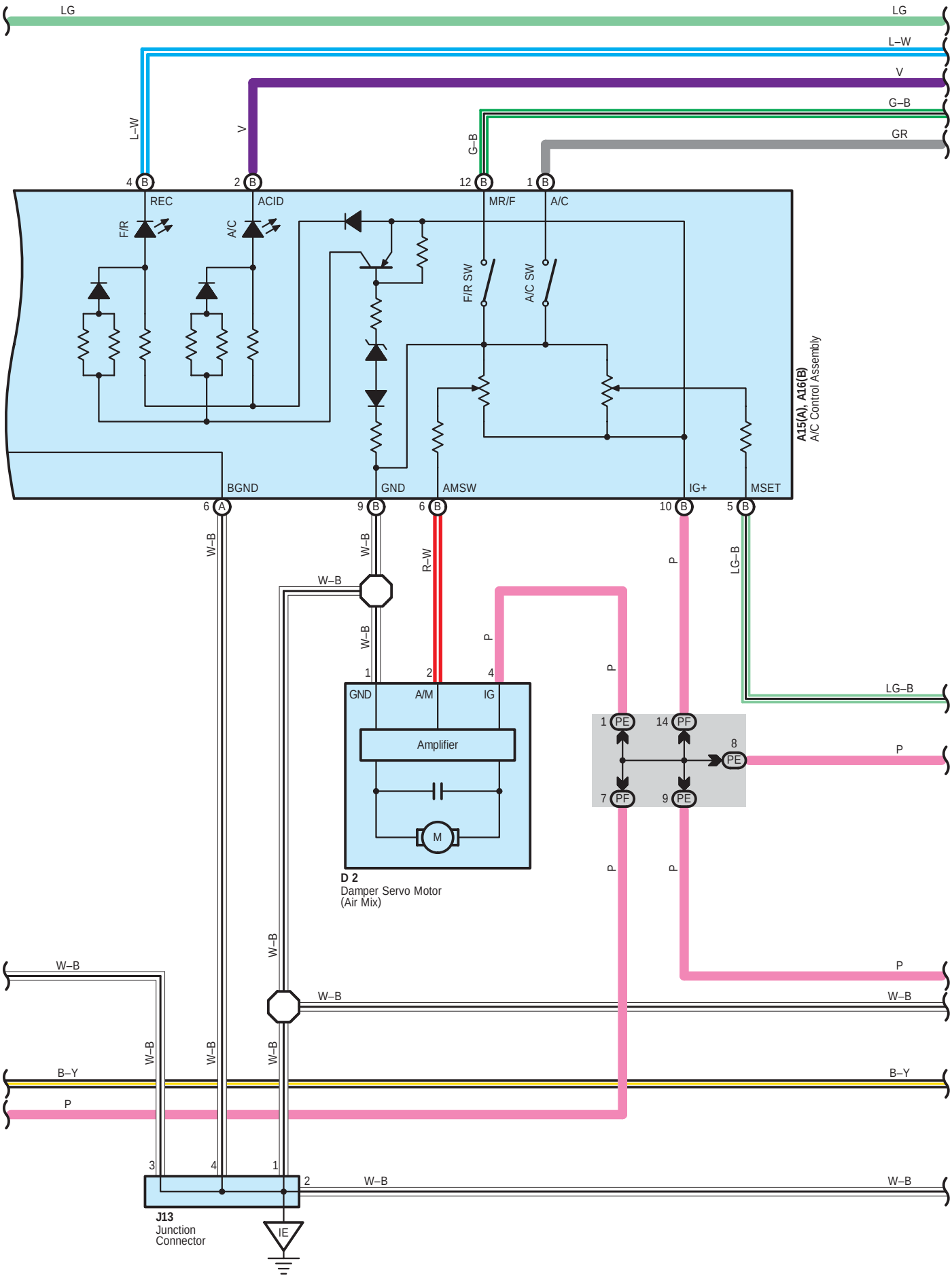
LG
LG
L–W
V
G–B
GR
L–W
V
G–B
4 B
2 B
12 B
1 B
REC
ACID
MR/F
A/C
F/R
A/C
F/R SW
A/C SW
A15(A), A16(B)
A/C Control Assembly
BGND
GND
AMSW
IG+
MSET
6 A
9 B
6 B
10 B
5 B
W–B
W–B
R–W
P
LG–B
W–B
W–B
P
1
2
4
GND
A/M
IG
Amplifier
M
D 2
Damper Servo Motor
(Air Mix)
1 PE
14 PF
8 PE
7 PF
9 PE
P
LG–B
P
P
P
W–B
W–B
W–B
W–B
W–B
W–B
B–Y
B–Y
P
3
4
1
2
W–B
W–B
J13
Junction
Connector
IE

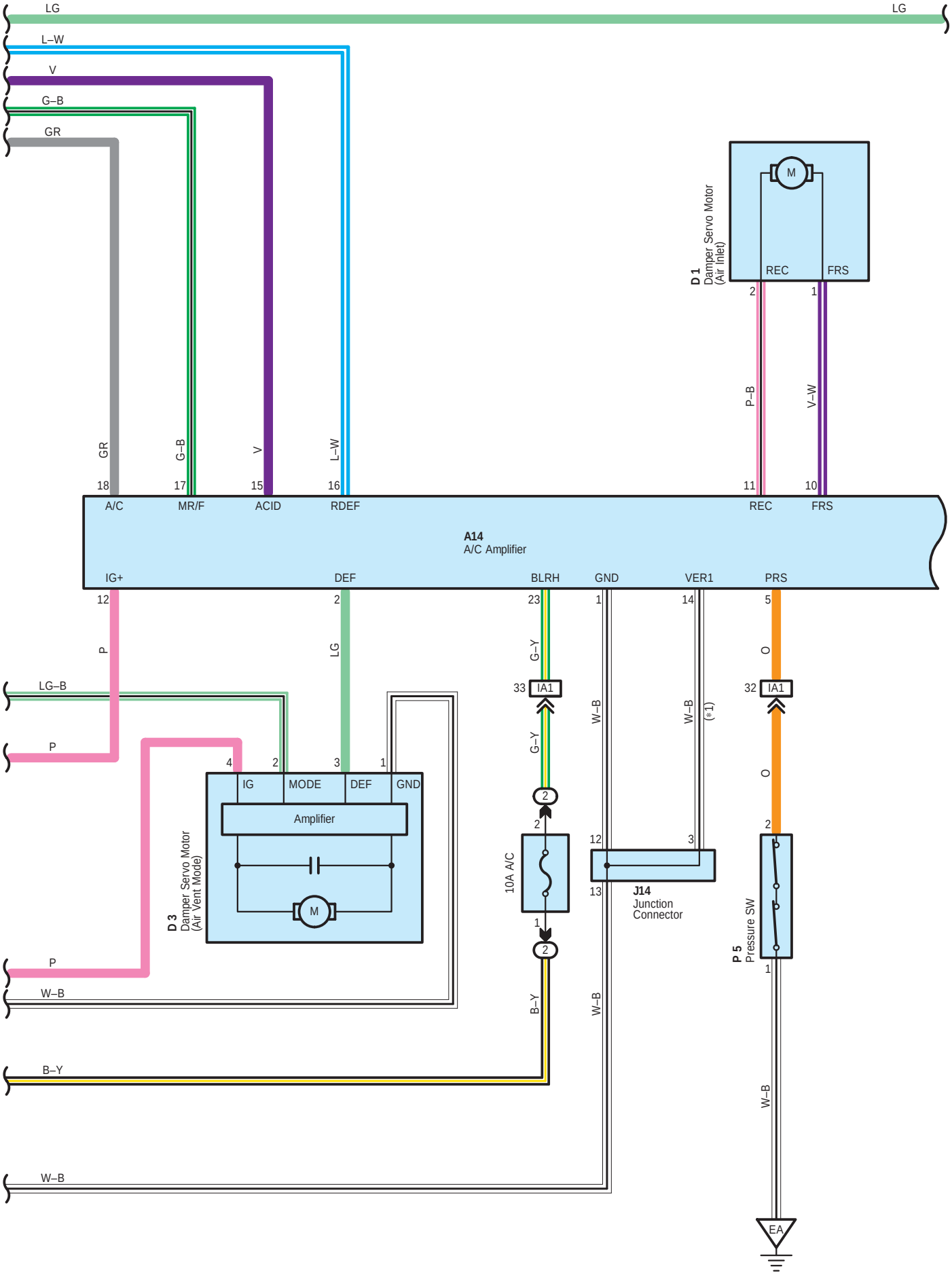
LG
LG
L–W
V
G–B
GR
D 1
Damper Servo Motor
(Air Inlet)
M
REC
FRS
2
1
P–B
V–W
GR
G–B
V
L–W
18
17
15
16
11
10
A/C
MR/F
ACID
RDEF
REC
FRS
A14
A/C Amplifier
IG+
DEF
BLRH
GND
VER1
PRS
12
2
23
1
14
5
P
LG
G–Y
O
LG–B
33
IA1
32
IA1
P
G–Y
W–B
W–B
(*1)
O
4
2
3
1
IG
MODE
DEF
GND
2
2
12
3
Amplifier
10A A/C
J14
Junction
Connector
D 3
Damper Servo Motor
(Air Vent Mode)
M
13
P
1
P 5
Pressure SW
W–B
B–Y
W–B
1
B–Y
W–B
EA

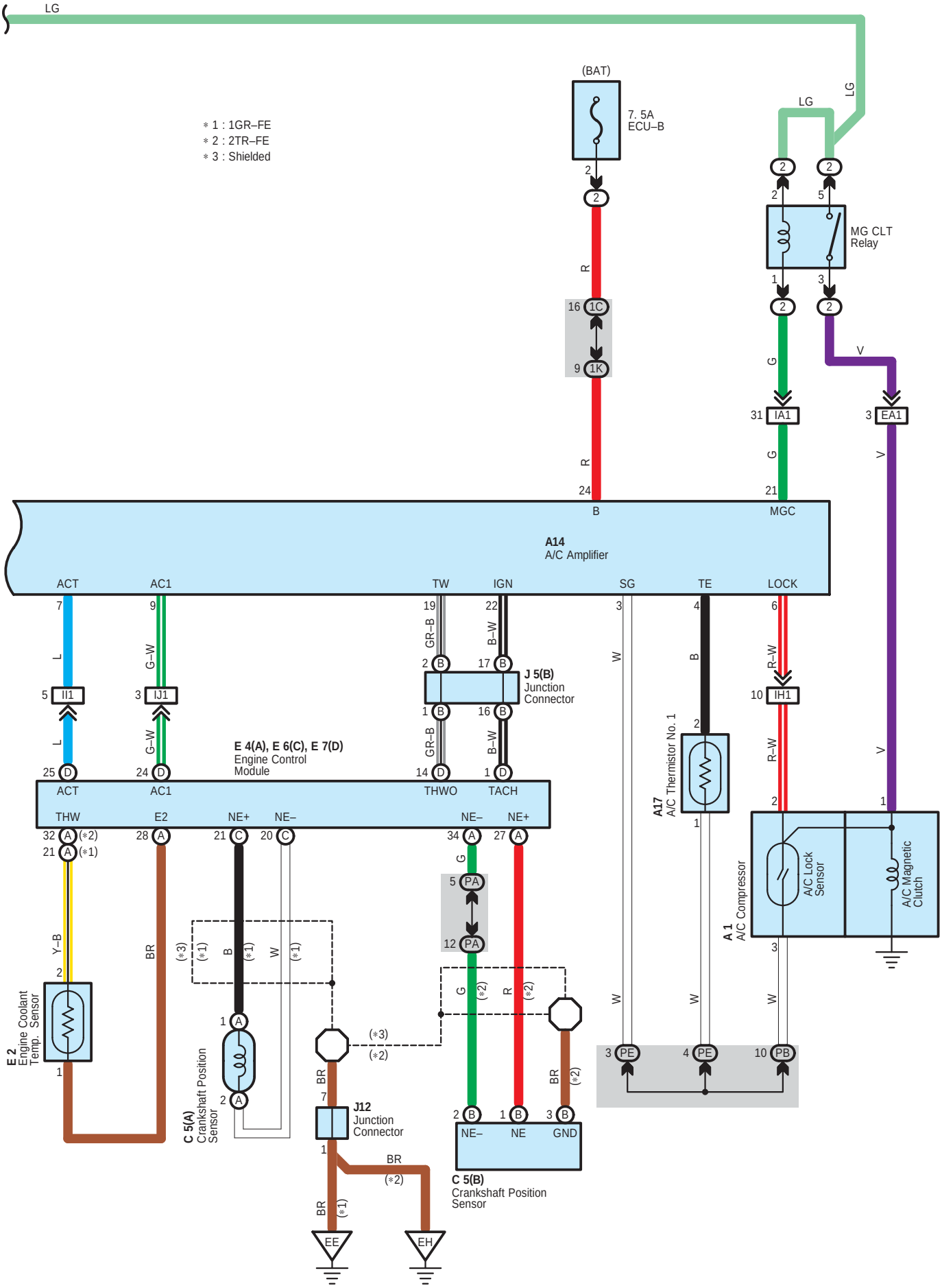
LG
(BAT)
7. 5A
ECU–B
LG
LG
MG CLT
Relay
∗ 1 : 1GR–FE
∗ 2 : 2TR–FE
∗ 3 : Shielded
R
R
V
G
G
V
V
A14
A/C Amplifier
ACT
AC1
TW
IGN
SG
TE
LOCK
J 5(B)
Junction
Connector
E 4(A), E 6(C), E 7(D)
Engine Control
Module
THW
E2
NE+
NE–
NE–
NE+
A17
A/C Thermistor No. 1
A 1
A/C Compressor
A/C Lock
Sensor
A/C Magnetic
Clutch
E 2
Engine Coolant
Temp. Sensor
C 5(A)
Crankshaft Position
Sensor
J12
Junction
Connector
C 5(B)
Crankshaft Position
Sensor
NE–
NE
GND
EE
EH

System Outline

The A/C amplifier receives various signals, I.E., the engine RPM from the engine control module and coolant temperature from the engine control module, etc.
When the engine is started and the A/C SW (A/C control assembly) is on, a signal is input to the A/C amplifier.
As a result, current flows from IG1 NO.2 fuse to TERMINAL 2 of the MG CLT relay to TERMINAL 1 to TERMINAL MGC of the A/C amplifier to GROUND, turning the MG CLT relay on, so that the magnetic clutch is on and the A/C compressor operates.
If the integration control and panel detects the following conditions, it stops the air conditioning:

* Evaporator outlet air temperature is too low.
* There is a marked difference between the compressor speed and the engine speed.
* The refrigerant pressure is abnormally high or abnormally low.
* The engine speed is too low.
* Rapid acceleration occurs.

: Parts Location

Code	See Page	Code	See Page	Code	See Page
A1	40 (1GR–FE)	C5 A	40 (1GR–FE)	E6 C	44
	42 (2TR–FE)	C5 B	42 (2TR–FE)	E7 D	44
A14	44	D1	44	J5 B	45
A15 A	44	D2	44	J12	45
A16 B	44	D3	44	J13	45
A17	44	E2	40 (1GR–FE)	J14	45
B3	44		42 (2TR–FE)	P5	41 (1GR–FE)
B4	44	E4 A	44		43 (2TR–FE)

: Relay Blocks

Code	See Page	Relay Blocks (Relay Block Location)
2	24	Engine Room R/B (Engine Compartment Left)

: Junction Block and Wire Harness Connector

Code	See Page	Junction Block and Wire Harness (Connector Location)
1C	28	Engine Room Main Wire and Driver Side J/B (Lower Finish Panel)
1J	29	Instrument Panel Wire and Driver Side J/B (Lower Finish Panel)
1K		
2A	24	Engine Room J/B (Engine Compartment Left)
DC	34	Engine Room Main Wire and Instrument Panel J/B No.1 (Left Kick Panel)
DD		
PB	36	Engine Wire and Instrument Panel J/B No.2 (Right Side of Glove Box)
PE	36	Instrument Panel Wire and Instrument Panel J/B No.2 (Right Side of Glove Box)
PF		

: Connector Joining Wire Harness and Wire Harness

Code	See Page	Joining Wire Harness and Wire Harness (Connector Location)
EA1	52 (1GR–FE)	Engine Wire and Engine Room Main Wire (Inside of Engine Room R/B)
	53 (2TR–FE)	
IA1	54	Instrument Panel Wire and Engine Room Main Wire (Left Kick Panel)
IA4		
IH1	55	Engine Wire and Instrument Panel Wire (Right Side of Glove Box)
II1	55	Instrument Panel Wire and Instrument Panel Wire (Instrument Panel Brace RH)
IJ1	55	Instrument Panel Wire and Instrument Panel Wire (Right Kick Panel)

▽ : **Ground Points**

Code	See Page	Ground Points Location
EA	52 (1GR–FE)	Front Right Fender
	53 (2TR–FE)	
EB	52 (1GR–FE)	Front Left Fender
	53 (2TR–FE)	
EE	52 (1GR–FE)	Rear Side of Right Bank Cylinder Block
EH	53 (2TR–FE)	Rear Side of Cylinder Block
IE	54	Right Kick Panel

PARTS LOCATION

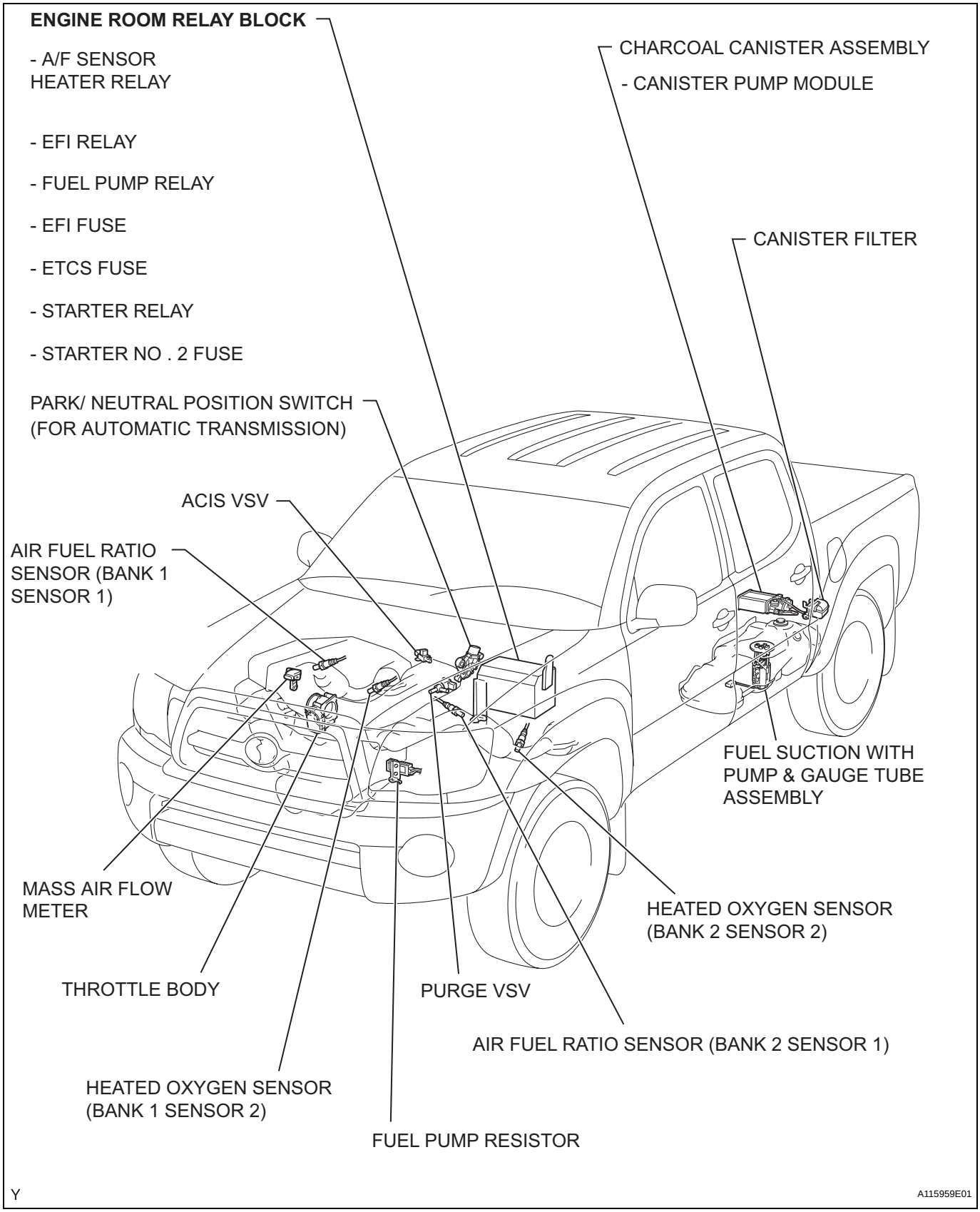

ES

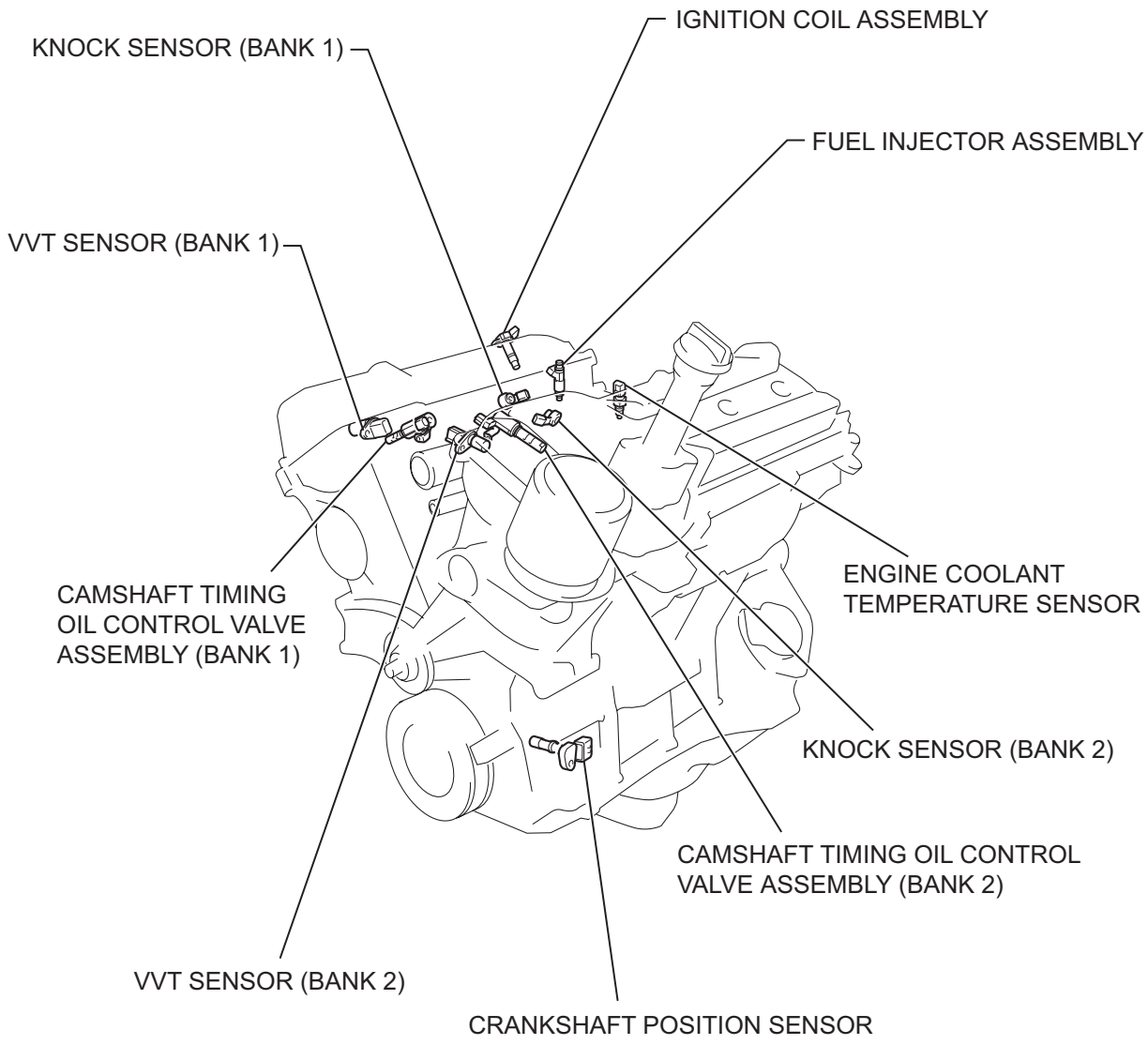
KNOCK SENSOR (BANK 1)
IGNITION COIL ASSEMBLY
FUEL INJECTOR ASSEMBLY
VVT SENSOR (BANK 1)
CAMSHAFT TIMING OIL CONTROL VALVE ASSEMBLY (BANK 1)
ENGINE COOLANT TEMPERATURE SENSOR
KNOCK SENSOR (BANK 2)
CAMSHAFT TIMING OIL CONTROL VALVE ASSEMBLY (BANK 2)
VVT SENSOR (BANK 2)
CRANKSHAFT POSITION SENSOR
Y
A115960E01

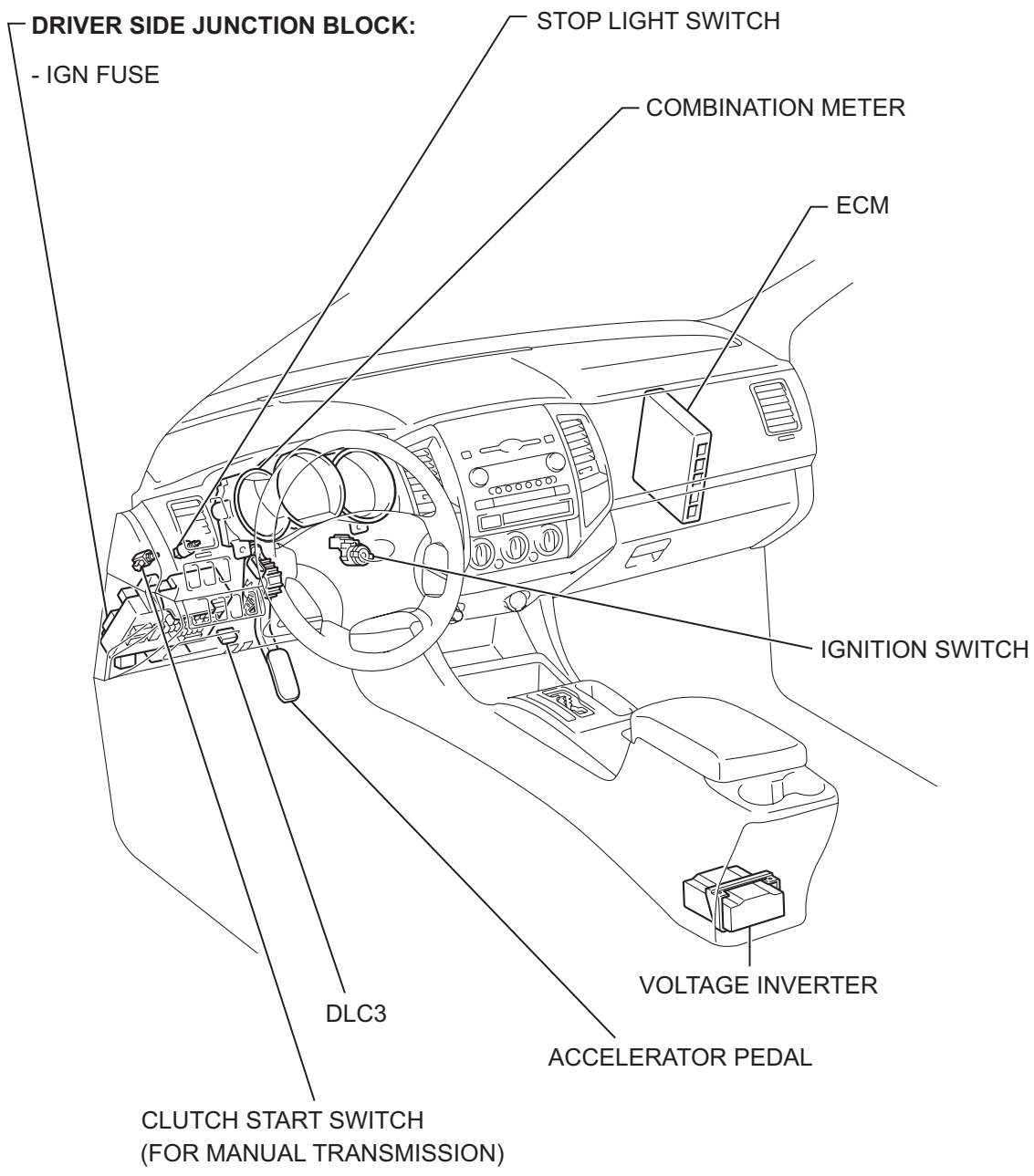
DRIVER SIDE JUNCTION BLOCK:
- IGN FUSE
STOP LIGHT SWITCH
COMBINATION METER
ECM
IGNITION SWITCH
VOLTAGE INVERTER
DLC3
ACCELERATOR PEDAL
CLUTCH START SWITCH
(FOR MANUAL TRANSMISSION)
Y
G034987E04

ES

TERMINALS OF ECM

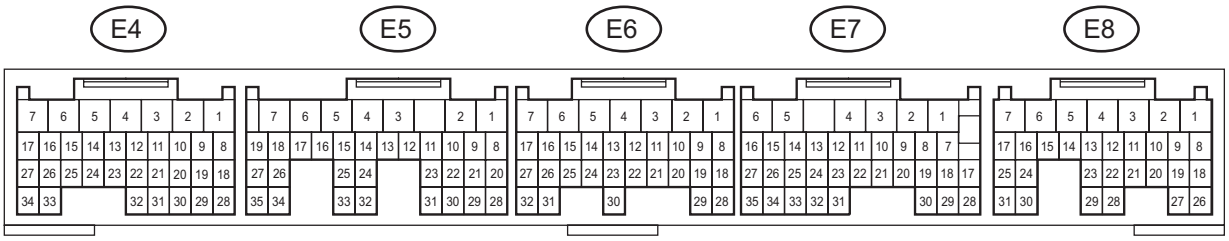

Y

A121603E02

HINT:
The standard normal voltage between each pair of ECM terminals is shown in the table below. The appropriate conditions for checking each pair of terminals are also indicated.
The result of checks should be compared with the standard normal voltage for that pair of terminals, displayed in the STD Voltages column.
The illustration above can be used as a reference to identify the ECM terminal locations.

Symbols (Terminal No.)	Wiring Colors	Terminal Descriptions	Conditions	STD Voltages
BATT (E8-3) - E1 (E6-1)	L - BR	Battery (for measuring the battery voltage and for the ECM memory)	Always	9 to 14 V
+BM (E8-7) - E1 (E6-1)	LG - BR	Power source of throttle motor	Always	9 to 14 V
IGSW (E8-9) - E1 (E6-1)	O - BR	Ignition switch	Ignition switch ON	9 to 14 V
+B (E8-1) - E1 (E6-1)	B - BR	Power source of ECM	Ignition switch ON	9 to 14 V
+B2 (E8-2) - E1 (E6-1)	B - BR	Power source of ECM	Ignition switch ON	9 to 14 V
OC1+ (E6-17) - OC1- (E6-16)	G-Y - L-B	Camshaft timing oil control valve (OCV)	Ignition switch ON	Pulse generation (see waveform 1)
OC2+ (E6-15) - OC2- (E6-14)	L-W - L-R	Camshaft timing oil control valve (OCV)	Ignition switch ON	Pulse generation (see waveform 1)
MREL (E8-8) - E1 (E6-1)	G-W - BR	EFI relay	Ignition switch ON	9 to 14 V
VC (E4-23) - E2 (E4-28)	L - BR	Power source of sensor (specific voltage)	Ignition switch ON	4.5 to 5.0 V
VG (E4-30) - E2G (E4-29)	R-Y - R-W	Mass air flow meter	Idling, Shift lever position P or N, A/C switch OFF	0.5 to 3.0 V
THA (E4-22) - E2 (E4-28)	R-L - BR	Intake air temperature sensor	Idling, Intake air temperature 20°C (68°F)	0.5 to 3.4 V
THW (E4-21) - E2 (E4-28)	Y-B - BR	Engine coolant temperature sensor	Idling, Engine coolant temperature 80°C (176°F)	0.2 to 1.0 V
VTA1 (E4-20) - E2 (E4-28)	G-B - BR	Throttle position sensor (for engine control)	Ignition switch ON, Throttle valve fully closed	0.5 to 1.2 V
VTA1 (E4-20) - E2 (E4-28)	G-B - BR	Throttle position sensor (for engine control)	Ignition switch ON, Throttle valve fully open	3.2 to 4.8 V

Symbols (Terminal No.)	Wiring Colors	Terminal Descriptions	Conditions	STD Voltages
VTA2 (E4-19) - E2 (E4-28)	G-W - BR	Throttle position sensor (for sensor malfunction detection)	Ignition switch ON, Accelerator pedal fully released	2.1 to 3.1 V
VTA2 (E4-19) - E2 (E4-28)	G-W - BR	Throttle position sensor (for sensor malfunction detection)	Ignition switch ON, Accelerator pedal fully depressed	4.5 to 5.0 V
VPA (E8-18) - EPA (E8-20)	R-Y - LG-B	Accelerator pedal position sensor (for engine control)	Ignition switch ON, Accelerator pedal fully released	0.5 to 1.1 V
VPA (E8-18) - EPA (E8-20)	R-Y - LG-B	Accelerator pedal position sensor (for engine control)	Ignition switch ON, Accelerator pedal fully depressed	2.6 to 4.5 V
VPA2 (E8-19) - EPA2 (E8-21)	GR-B - R-B	Accelerator pedal position sensor (for sensor malfunction detection)	Ignition switch ON, Accelerator pedal fully released	1.2 to 2.0 V
VPA2 (E8-19) - EPA2 (E8-21)	GR-B - R-B	Accelerator pedal position sensor (for sensor malfunction detection)	Ignition switch ON, Accelerator pedal fully depressed	3.4 to 5.0 V
VCPA (E8-26) - EPA (E8-20)	R - LG-B	Power source of accelerator pedal position sensor (for VPA)	Ignition switch ON	4.5 to 5.0 V
VCP2 (E8-27) - EPA2 (E8-21)	L-W - R-B	Power source of accelerator pedal position sensor (for VPA2)	Ignition switch ON	4.5 to 5.0 V
HA1A (E5-2) - E04 (E5-7) HA2A (E5-1) - E05 (E5-6)	R - W-B B-W - W-B	A/F sensor heater	Idling	Below 3.0 V
HA1A (E5-2) - E04 (E5-7) HA2A (E5-1) - E05 (E5-6)	R - W-B B-W - W-B	A/F sensor heater	Ignition switch ON	9 to 14 V
A1A+ (E5-22) - E1 (E6-1)	P - BR	A/F sensor	Ignition switch ON	3.3 V*1
A2A+ (E5-23) - E1 (E6-1)	W - BR	A/F sensor	Ignition switch ON	3.3 V*1
A1A- (E5-30) - E1 (E6-1)	L - BR	A/F sensor	Ignition switch ON	2.9 V*1
A2A- (E5-31) - E1 (E6-1)	R - BR	A/F sensor	Ignition switch ON	2.9 V*1
HT1B (E4-1) - E1 (E6-1) HT2B (E5-5) - E1 (E6-1)	G - BR L - BR	Heated oxygen sensor heater	Idling	Below 3.0 V
HT1B (E4-1) - E1 (E6-1) HT2B (E5-5) - E1 (E6-1)	G - BR L - BR	Heated oxygen sensor heater	Ignition switch ON	9 to 14 V
OX1B (E4-18) - E2 (E4-28) OX2B (E5-33) - E2 (E4-28)	W - BR B - BR	Heated oxygen sensor	Maintain engine speed at 2,500 rpm for 2 minutes after warming up	Pulse generation (see waveform 2)
#10 (E6-2) - E01 (E4-7) #20 (E6-3) - E01 (E4-7) #30 (E6-4) - E01 (E4-7) #40 (E6-5) - E01 (E4-7) #50 (E6-6) - E01 (E4-7) #60 (E6-7) - E01 (E4-7)	R-L - W-B B - W-B R - W-B G - W-B Y - W-B L - W-B	Injector	Ignition switch ON	9 to 14 V
#10 (E6-2) - E01 (E4-7) #20 (E6-3) - E01 (E4-7) #30 (E6-4) - E01 (E4-7) #40 (E6-5) - E01 (E4-7) #50 (E6-6) - E01 (E4-7) #60 (E6-7) - E01 (E4-7)	R-L - W-B B - W-B R - W-B G - W-B Y - W-B L - W-B	Injector	Idling	Pulse generation (see waveform 3)
KNK1 (E5-29) - EKNK (E5-28)	B - W	Knock sensor	Maintain engine speed at 4,000 rpm after warming up	Pulse generation (see waveform 4)
KNK2 (E5-21) - EKN2 (E5-20)	G - R	Knock sensor	Maintain engine speed at 4,000 rpm after warming up	Pulse generation (see waveform 4)
VV1+ (E6-19) - VV1- (E6-29)	R - G	Variable valve timing (VVT) sensor	Idling	Pulse generation (see waveform 5)

Symbols (Terminal No.)	Wiring Colors	Terminal Descriptions	Conditions	STD Voltages
VV2+ (E6-18) - VV2- (E6-28)	Y - L	Variable valve timing (VVT) sensor	Idling	Pulse generation (see waveform 5)
NE+ (E6-21) - NE- (E6-20)	B - W	Crankshaft position sensor	Idling	Pulse generation (see waveform 5)
IGT1 (E4-8) - E1 (E6-1) IGT2 (E4-9) - E1 (E6-1) IGT3 (E4-10) - E1 (E6-1) IGT4 (E4-11) - E1 (E6-1) IGT5 (E4-12) - E1 (E6-1) IGT6 (E4-13) - E1 (E6-1)	P - BR P-L - BR LG - BR LG-B - BR GR - BR G - BR	Ignition coil with igniter (ignition signal)	Idling	Pulse generation (see waveform 6)
IGF1 (E4-24) - E1 (E6-1)	W-R - BR	Ignition coil with igniter (ignition confirmation signal)	Ignition switch ON	4.5 to 5.0 V
IGF1 (E4-24) - E1 (E6-1)	W-R - BR	Ignition coil with igniter (ignition confirmation signal)	Idling	Pulse generation (see waveform 6)
PRG (E4-34) - E1 (E6-1)	Y - BR	Purge VSV	Ignition switch ON	9 to 14 V
PRG (E4-34) - E1 (E6-1)	Y - BR	Purge VSV	Idling	Pulse generation (see waveform 7)
SPD (E7-8) - E1 (E6-1)	V-W - BR	Speed signal from combination meter	Ignition switch ON, Rotate driving wheel slowly	Pulse generation (see waveform 8)
STA (E6-11) - E1 (E6-1)	B-Y - BR	Starter signal	Cranking	9 to 14 V
STP (E8-15) - E1 (E6-1)	L - BR	Stop light switch	Brake pedal depressed	7.5 to 14 V
STP (E8-15) - E1 (E6-1)	L - BR	Stop light switch	Brake pedal released	Below 1.5 V
ST1- (E8-16) - E1 (E6-1)	V-W - BR	Stop light switch (opposite to STP terminal)	Ignition switch ON, Brake pedal depressed	Below 1.5 V
ST1- (E8-16) - E1 (E6-1)	V-W - BR	Stop light switch (opposite to STP terminal)	Ignition switch ON, Brake pedal released	7.5 to 14 V
NSW (E5-8) - E1 (E6-1)	V - BR	Park/Neutral position switch	Ignition switch ON, Shift lever position in P or N	Below 3.0 V
NSW (E5-8) - E1 (E6-1)	V - BR	Park/Neutral position switch	Ignition switch ON, Shift lever position other than P and N	9 to 14 V
M+ (E4-5) - ME01 (E5-3)	P - W-B	Throttle motor	Idling with warm engine	Pulse generation (see waveform 9)
M- (E4-4) - ME01 (E5-3)	L - W-B	Throttle motor	Idling with warm engine	Pulse generation (see waveform 10)
FC (E8-10) - E1 (E6-1)	L-B - BR	Fuel pump control	Ignition switch ON	9 to 14 V
FPR (E6-30) - E1 (E6-1)	Y-R - BR	Fuel pump control	Ignition switch ON	9 to 14 V
W (E7-30) - E1 (E6-1)	BR - BR	MIL	Ignition switch ON	Below 3.0 V
W (E7-30) - E1 (E6-1)	BR - BR	MIL	Idling	9 to 14 V
ELS (E7-13) - E1 (E6-1)	G - BR	Electric load	Defogger switch OFF	0 to 1.5 V
ELS (E7-13) - E1 (E6-1)	G - BR	Electric load	Defogger switch ON	7.5 to 14 V
ELS2 (E7-12) - E1 (E6-1)	B-W - BR	Electric load	Taillight switch OFF	0 to 1.5 V
ELS2 (E7-12) - E1 (E6-1)	B-W - BR	Electric load	Taillight switch ON	7.5 to 14 V
TC (E8-23) - E1 (E6-1)	P-B - BR	Terminal TC of DLC 3	Ignition switch ON	9 to 14 V
TACH (E7-1) - E1 (E6-1)	B-W - BR	Engine speed	Idling	Pulse generation (see waveform 11)
ACIS (E4-33) - E1 (E6-1)	W-L - BR	VSV for ACIS	Ignition switch ON	9 to 14 V
PSW (E6-10) - E1 (E6-1)	G-W - BR	P/S pressure switch	Ignition switch ON	9 to 14 V
VPMP (E8-5) - E1 (E6-1)	V-W - BR	Vent valve (built into canister pump module)	Ignition switch ON	9 to 14 V
MPMP (E8-6) - E1 (E6-1)	G - BR	Leak detection pump (built into canister pump module)	Leak detection pump OFF	0 to 3 V

Symbols (Terminal No.)	Wiring Colors	Terminal Descriptions	Conditions	STD Voltages
MPMP (E8-6) - E1 (E6-1)	G - BR	Leak detection pump (built into canister pump module)	Leak detection pump ON	9 to 14 V
PPMP (E8-22) - E2 (E4-28)	GR - BR	Canister pressure sensor (built into canister pump module)	Ignition switch ON	3 to 3.6 V
F/PS (E7-32) - E1 (E6-1)	R - BR	Airbag sensor assembly	Idling with warm engine	Pulse generation (see waveform 12)
CANH (E7-33) - E1 (E6-1)	B - BR	CAN communication line	Ignition switch ON	Pulse generation (see waveform 13)
CANL (E7-34) - E1 (E6-1)	W - BR	CAN communication line	Ignition switch ON	Pulse generation (see waveform 14)

*1: The ECM terminal voltage is constant regardless of the output voltage from the sensor.

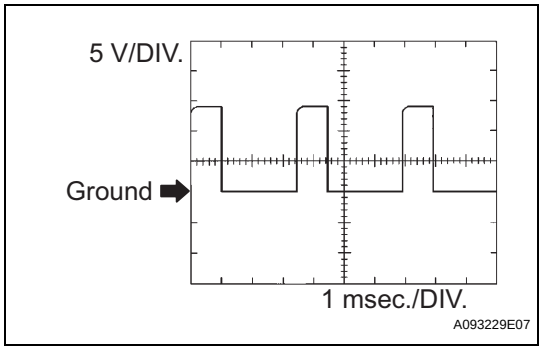

1. WAVEFORM 1
Camshaft timing oil control valve (OCV)

ECM Terminal Names	Between OC1+ and OC1- or OC2+ and OC2-
Tester Ranges	5 V/DIV, 1 msec./DIV
Conditions	Idling

HINT:
The wavelength becomes shorter as the engine rpm increases.

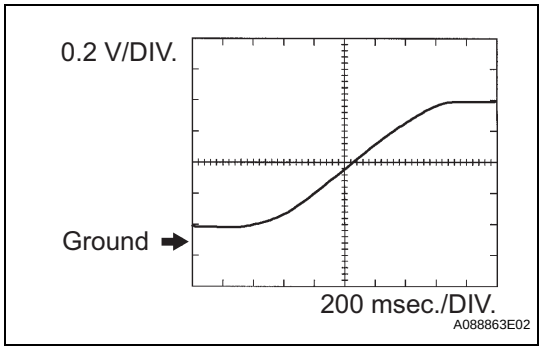

2. WAVEFORM 2
Heated oxygen sensor

ECM Terminal Names	Between OX1B and E2 or OX2B and E2
Tester Ranges	0.2 V/DIV, 200 msec./DIV
Conditions	Engine speed maintained at 2,500 rpm for 2 minutes after warming up sensor

HINT:
In the DATA LIST, item O2S B1S2 or O2S B2S2 shows the ECM input values from the heated oxygen sensor.

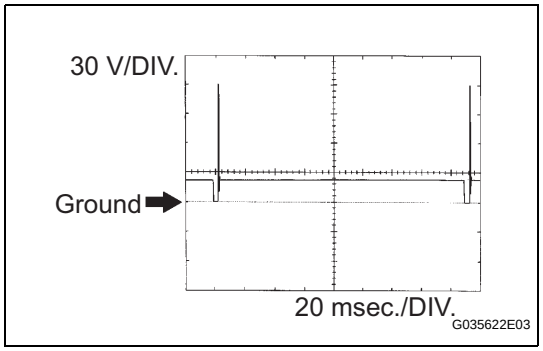

3. WAVEFORM 3
Fuel injector

ECM Terminal Names	Between #10 (to 60) and E01
Tester Ranges	30 V/DIV, 20 msec./DIV
Conditions	Idling

HINT:
The wavelength becomes shorter as the engine rpm increases.

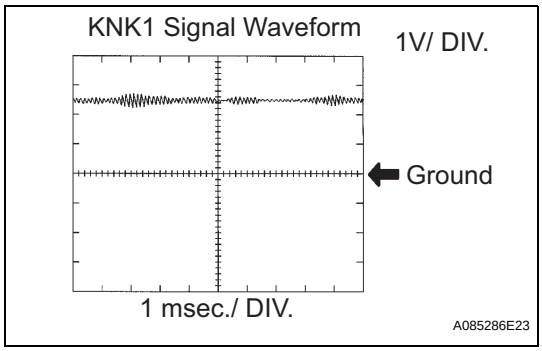

4. WAVEFORM 4
Knock sensor

ECM Terminal Names	Between KNK1 and EKNK or KNK2 and EKN2
Tester Ranges	0.01 to 10 V/DIV, 0.01 to 10 msec./DIV
Conditions	Engine speed maintained at 4,000 rpm after warming up engine

HINT:
- The wavelength becomes shorter as the engine rpm increases.
- The waveforms and amplitudes displayed on the tester differ slightly depending on the vehicle.

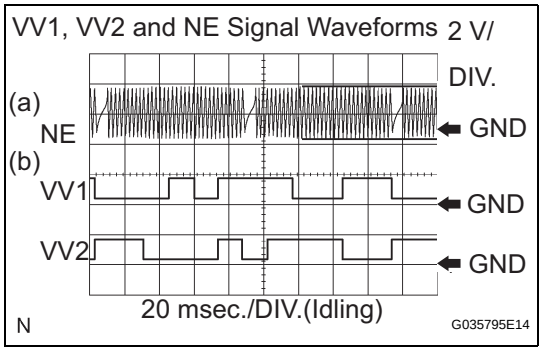

5. WAVEFORM 5
(a) VVT sensor
(b) Crankshaft position sensor

ECM Terminal Names	(a) Between NE+ and NE- (b) Between VV1+ and VV1- or VV2+ and VV2-
Tester Ranges	2 V/DIV, 20 msec./DIV
Conditions	Idling

HINT:
The wavelength becomes shorter as the engine rpm increases.

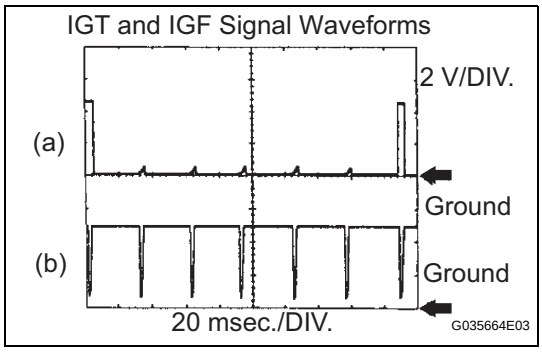

6. WAVEFORM 6
(a) Igniter IGT signal (from ECM to igniter)
(b) Igniter IGF signal (from igniter to ECM)

ECM Terminal Names	(a) Between IGT (1 to 6) and E1 (b) Between IGF1 and E1
Tester Ranges 2	2 V/DIV, 20 msec./DIV
Conditions	Idling

HINT:
The wavelength becomes shorter as the engine rpm increases.

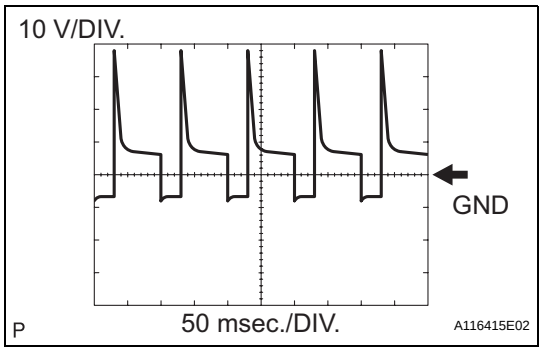

7. WAVEFORM 7
Purge VSV

ECM Terminal Names	Between PRG and E01
Tester Ranges	10 V/DIV, 50 msec./DIV
Conditions	Idling

HINT:
If the waveform is not similar to the illustration, check the waveform again after idling for 10 minutes or more.

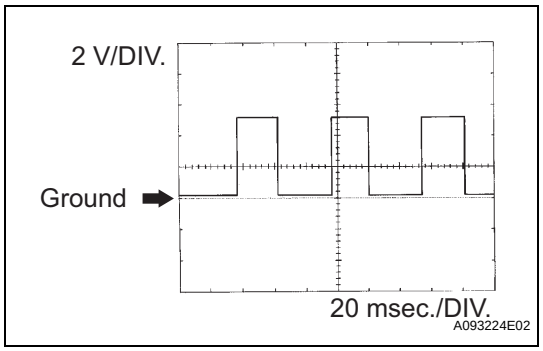

8. WAVEFORM 8
Vehicle speed signal

ECM Terminal Names	Between SPD and E1
Tester Ranges	2 V/DIV, 20 msec./DIV
Conditions	Driving at 12 mph (20 km/h)

HINT:
The wavelength becomes shorter as the vehicle speed increases.

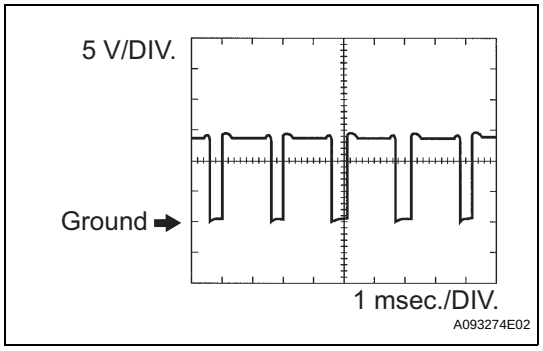

9. WAVEFORM 9
Throttle actuator positive terminal

ECM Terminal Names	Between M+ and ME01
Tester Ranges	5 V/DIV, 1 msec./DIV
Conditions	Idling with warm engine

HINT:
The duty ratio varies depending on the throttle actuator operation.

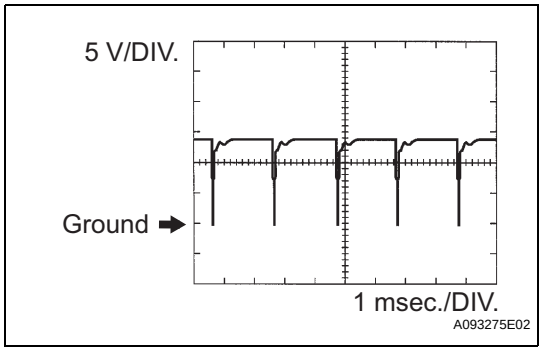

10. WAVEFORM 10
Throttle actuator negative terminal

ECM Terminal Names	Between M- and ME01
Tester Ranges	5 V/DIV, 1 msec./DIV
Conditions	Idling with warm engine

HINT:
The duty ratio varies depending on the throttle actuator operation.

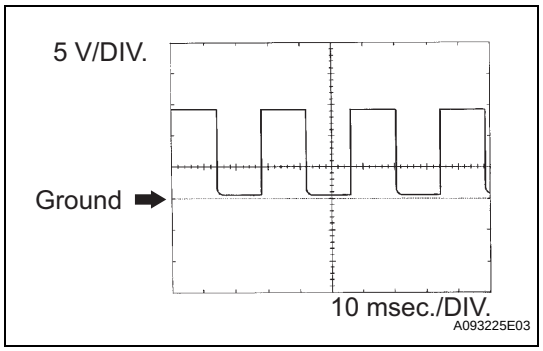

11. WAVEFORM 11
Engine speed signal

ECM Terminal Names	Between TACH and E1
Tester Ranges	5 V/DIV, 10 msec./DIV
Conditions	Idling

HINT:
The wavelength becomes shorter as the engine rpm increases.

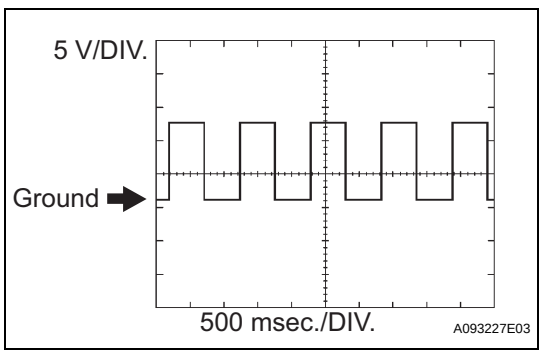

12. WAVEFORM 12
Airbag sensor assembly

ECM Terminal Names	Between F/PS and E1
Tester Ranges	5 V/DIV, 500 msec./DIV
Conditions	Idling with warm engine

ES

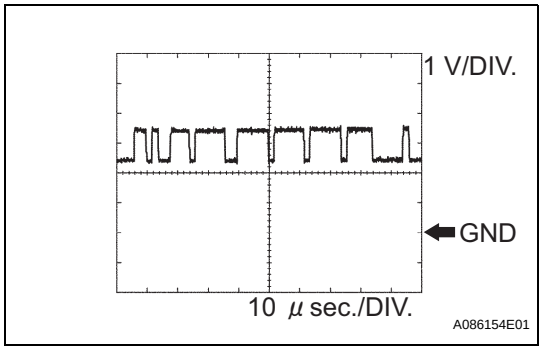

13. WAVEFORM 13
CAN communication signal

ECM Terminal Names	Between CANH and E1
Tester Ranges	1 V/DIV, 10μsec./DIV
Conditions	Stop engine and ignition switch ON

HINT:
The wavelength varies depending on the CAN communication signal.

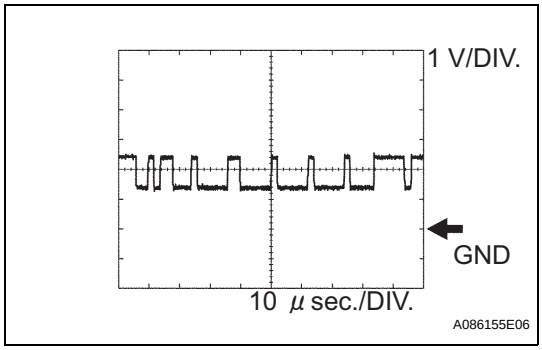

14. WAVEFORM 14
CAN communication signal

ECM Terminal Names	Between CANL and E1
Tester Ranges	1 V/DIV, 10μsec./DIV
Conditions	Stop engine and ignition switch ON

HINT:
The wavelength varies depending on the CAN communication signal.

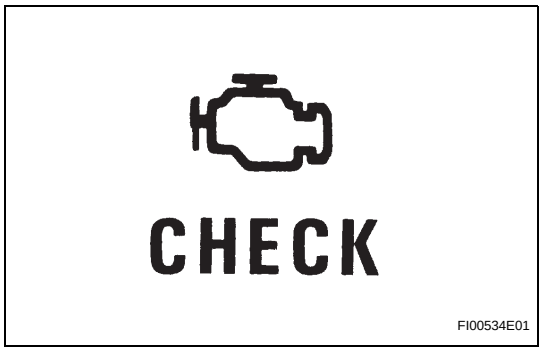

DIAGNOSIS SYSTEM

1. DESCRIPTION

When troubleshooting OBD II (On-Board Diagnostics) vehicles, an intelligent tester (complying with SAE J1987) must be connected to the DLC3 (Data Link Connector 3) of the vehicle. Various data in the vehicle's ECM (Engine Control Module) can be then read.
OBD II regulations require that the vehicle's on-board computer illuminates the MIL (Malfunction Indicator Lamp) on the instrument panel when the computer detects a malfunction in:

(a) The emission control systems and components
(b) The power train control components (which affect vehicle emissions)

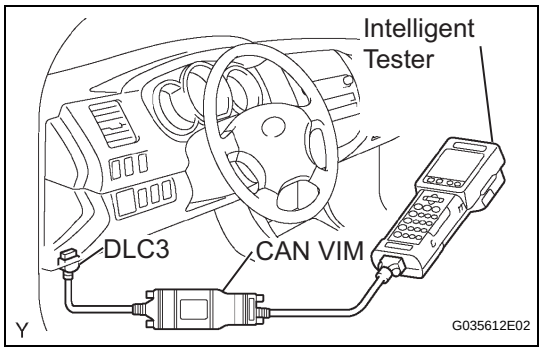

(c) The computer itself
In addition, the applicable DTCs (Diagnostic Trouble Codes) prescribed by SAE J2012 are recorded on 3 consecutive trips, the MIL turns off automatically but the DTCs remain recorded in the ECM memory.
To check DTCs, connect an intelligent tester to the DLC3. The tester displays DTCs, freeze frame data, and a variety of engine data. The DTCs and freeze frame data can be erased with the tester (See page ES-38).
In order to enhance OBD function on vehicles and develop the Off-Board diagnosis system, CAN communication is introduced in this system (CAN: Controller Area Network). It minimizes a gap between technician skills and vehicle technology. CAN is a network, which uses a pair of data transmission lines, spanning multiple computers and sensors. It allows a high speed communication between the systems and to simplify the wire harness connection.
Since this system is equipped with the CAN communication, connecting the CAN VIM (VIM: Vehicle Interface Module) with an intelligent tester is necessary to display any information from the ECM. (Also the communication between an intelligent tester and the ECM uses CAN communication signals.) When confirming the DTCs and any data of the ECM, connect the CAN VIM between the DLC3 and an intelligent tester.

2. NORMAL MODE AND CHECK MODE

The diagnosis system operates in normal mode during normal vehicle use. In normal mode, 2 trip detection logic is used to ensure accurate detection of malfunctions. Check mode is also available as an option for technicians. In check mode, 1 trip detection logic is used for simulating malfunction symptoms and increasing the system's ability to detect malfunctions, including intermittent problems (intelligent tester only) (See page ES-12).

3. 2 TRIP DETECTION LOGIC

When a malfunction is first detected, the malfunction is temporarily stored in the ECM memory (1st trip). If the same malfunction is detected during the next subsequent drive cycle, the MIL is illuminated (2nd trip).

4. FREEZE FRAME DATA

Freeze frame data record the engine condition (fuel system, calculated engine load, engine coolant temperature, fuel trim, engine speed, vehicle speed, etc) when malfunctions are detected. When troubleshooting, freeze frame data can help determine if the vehicle was moving or stationary, if the engine was warmed up or not, if the air-fuel ratio was lean or rich, and other data, from the time the malfunction occurred.

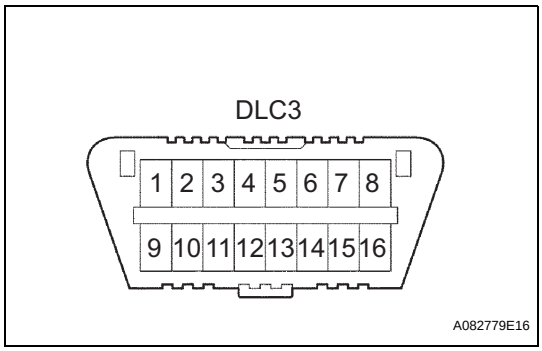

5. DLC3 (Data Link Connector 3)

The vehicle's ECM uses the ISO 15765-4 for communication protocol. The terminal arrangement of the DLC3 complies with SAE J1962 and matches the ISO 15765-4 format.

Symbols	Terminal No.	Names	Reference terminals	Results	Conditions
SIL	7	Bus "+" line	5 - Signal ground	Pulse generation	During transmission
CG	4	Chassis ground	Body ground	1 Ω or less	Always
SG	5	Signal ground	Body ground	1 Ω or less	Always
BAT	16	Battery positive	Body ground	9 to 14 V	Always
CANH	6	CAN "High" line	CANL	54 to 69 Ω	Ignition switch OFF*
CANH	6	CAN "High" line	Battery positive	1 MΩ or higher	Ignition switch OFF*
CANH	6	CAN "High" line	CG	200 Ω or higher	Ignition switch OFF*
CANL	14	CAN "Low" line	Battery positive	1 MΩ or higher	Ignition switch OFF*
CANL	14	CAN "Low" line	CG	200 Ω or higher	Ignition switch OFF*

HINT:

*: Before measuring the resistance, leave the vehicle as is for at least 1 minute and do not operate the ignition switch, any other switches or the doors.

HINT:

The DLC3 is the interface prepared for reading various data from the vehicle's ECM. After connecting the cable of an intelligent tester, turn the ignition switch ON and turn the tester ON. If a communication failure message is displayed on the tester screen (on the tester: UNABLE TO CONNECT TO VEHICLE), a problem exists in either the vehicle or tester. In order to identify the location of the problem, connect the tester to another vehicle.

If communication is normal: Inspect the DLC3 on the original vehicle.

If communication is impossible: The problem is probably with the tester itself. Consult the Service Department listed in the instruction manual.

6. BATTERY VOLTAGE

Battery Voltage:

11 to 14 V

If the voltage is below 11 V, recharge the battery before proceeding.

7. MIL (Malfunction Indicator Lamp)

(a) The MIL is illuminated when the ignition switch is first turned ON (the engine is not running).

(b) The MIL should turn off when the engine is started. If the MIL remains illuminated, the diagnosis system has detected a malfunction or abnormality in the system.
HINT:
If the MIL is not illuminated when the ignition switch is first turned ON, check the MIL circuit (See page ES-411).

ES

DTC CHECK / CLEAR

NOTICE:
When the diagnosis system is changed from normal mode to check mode or vice versa, all DTCs and freeze frame data recorded in normal mode are erased. Before changing modes, always check and make a note of DTCs and freeze frame data.
HINT:

- DTCs which are stored in the ECM can be displayed on an intelligent tester. An intelligent tester can display current and pending DTCs.
- Some DTCs are not set if the ECM does not detect the same malfunction again during a second consecutive driving cycle. However, such malfunctions, detected on only one occasion, are stored as pending DTCs.

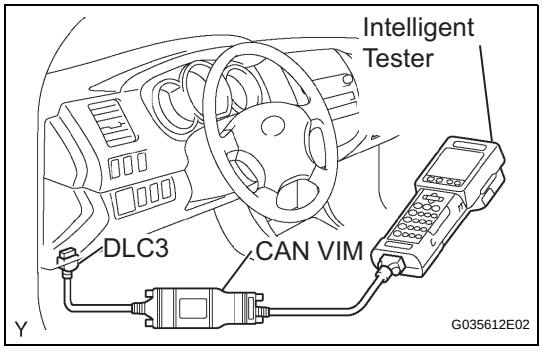

1. CHECK DTC (Using an intelligent tester)
(a) Connect an intelligent tester to the DLC3.
(b) Turn the ignition switch ON.
(c) Turn the tester ON.
(d) Select the following menu items: DIAGNOSIS / ENHANCED OBD II / DTC INFO / CURRENT CODES.
(e) Check the DTC(s) and freeze frame data, and then write them down.
(f) Check the details of the DTC(s) (See page ES-57).

2. CLEAR DTC (Using an intelligent tester)
(a) Connect an intelligent tester to the DLC3.
(b) Turn the ignition switch ON.
(c) Turn the tester ON.
(d) Select the following menu items: DIAGNOSIS / ENHANCED OBD II / DTC INFO / CLEAR CODES.
(e) Press the YES button.

3. CLEAR DTC (Without using an intelligent tester)
(a) Perform either one of the following operations.
(1) Disconnect the negative battery cable for more than 1 minute.
(2) Remove the EFI and ETCS fuses from the Relay Block (R/B) located inside the engine compartment for more than 1 minute.

PARTS LOCATION

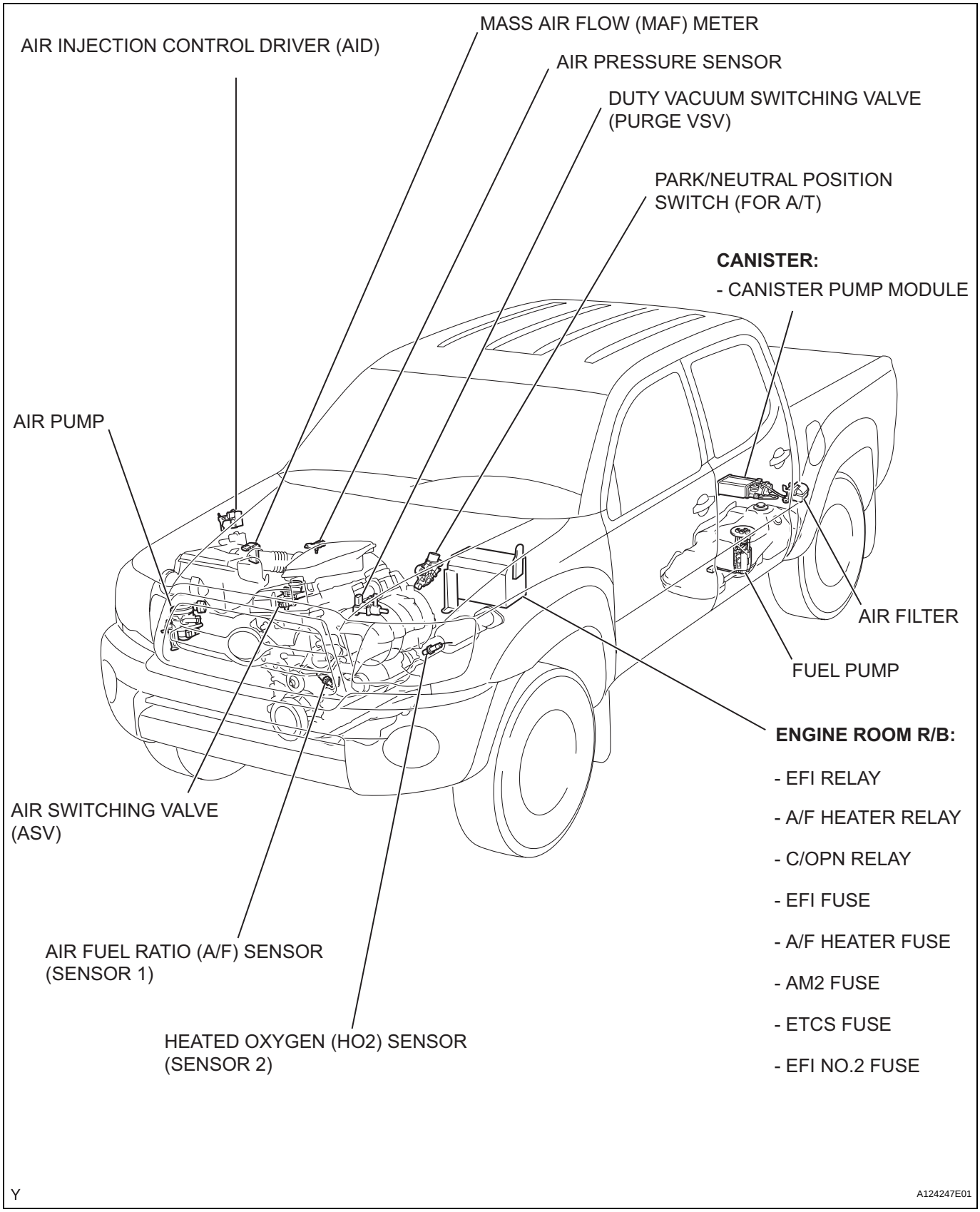

ES

ES

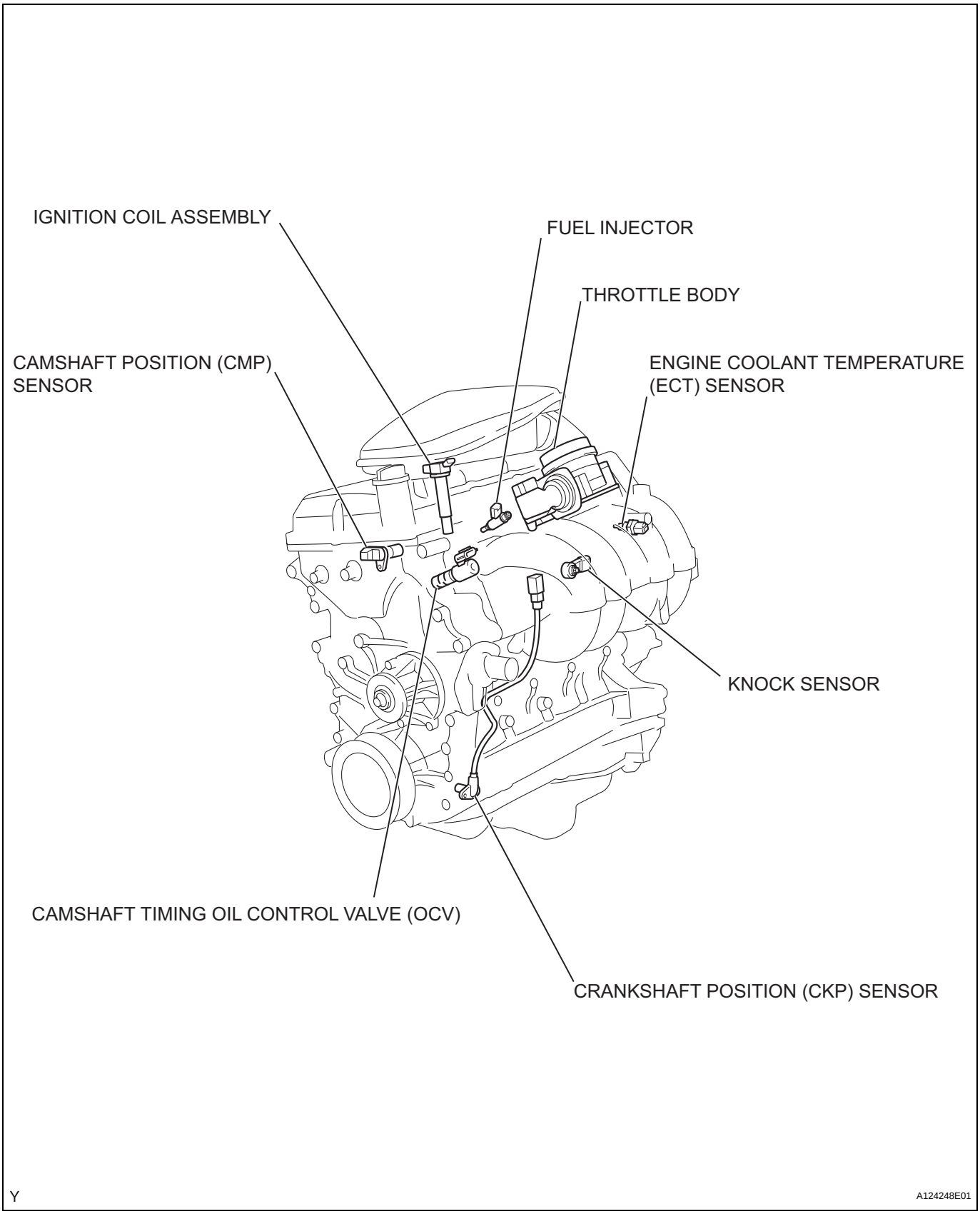
IGNITION COIL ASSEMBLY
FUEL INJECTOR
THROTTLE BODY
CAMSHAFT POSITION (CMP) SENSOR
ENGINE COOLANT TEMPERATURE (ECT) SENSOR
KNOCK SENSOR
CAMSHAFT TIMING OIL CONTROL VALVE (OCV)
CRANKSHAFT POSITION (CKP) SENSOR
Y
A124248E01

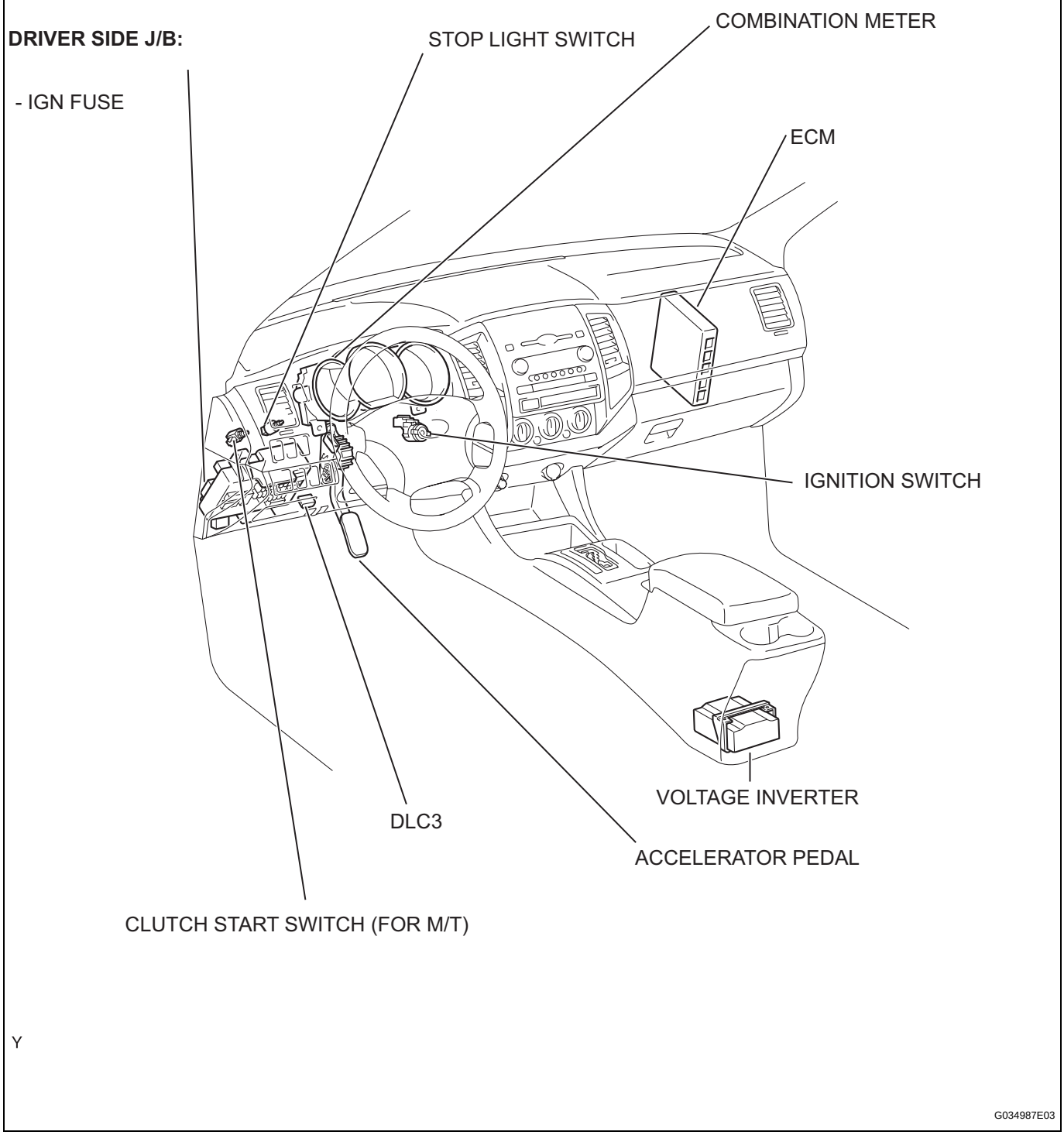
DRIVER SIDE J/B:
- IGN FUSE
STOP LIGHT SWITCH
COMBINATION METER
ECM
IGNITION SWITCH
VOLTAGE INVERTER
DLC3
ACCELERATOR PEDAL
CLUTCH START SWITCH (FOR M/T)
Y
G034987E03

ES

TERMINALS OF ECM

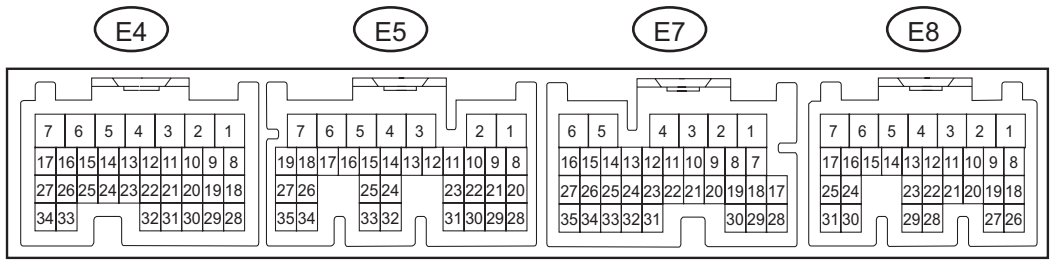

Y

C121776E01

HINT:
The standard normal voltage between each pair of ECM terminals is shown in the table below. The appropriate conditions for checking each pair of terminals are also indicated. The result of checks should be compared with the standard normal voltage for that pair of terminals, displayed in the STD Voltage column. The illustration above can be used as a reference to identify the ECM terminal locations.

Symbols (Terminals No.)	Wiring Colors	Terminal Descriptions	Conditions	STD Voltages
BATT (E8-3) - E1 (E4-3)	L - BR	Battery (for measuring battery voltage and for ECM memory)	Always	9 to 14 V
+BM (E8-7) - E1 (E4-3)	LG - BR	Power source of throttle motor	Always	9 to 14 V
IGSW (E8-9) - E1 (E4-3)	O - BR	Ignition switch	Ignition switch ON	9 to 14 V
+B (E8-1) - E1 (E4-3)	B - BR	Power source of ECM	Ignition switch ON	9 to 14 V
MREL (E8-8) - E1 (E4-3)	G-W - BR	EFI relay	Ignition switch ON	9 to 14 V
VC (E4-18) - E2 (E4-28)	L - BR	Power source of sensor (specific voltage)	Ignition switch ON	4.5 to 5.0 V
VTA1 (E4-20) - E2 (E4-28)	G-B - BR	Throttle position sensor (for engine control)	Ignition switch ON, Accelerator pedal fully released	0.5 to 1.1 V
VTA1 (E4-20) - E2 (E4-28)	G-B - BR	Throttle position sensor (for engine control)	Ignition switch ON, Accelerator pedal fully depressed	3.3 to 4.9 V
VTA2 (E4-19) - E2 (E4-28)	G-W - BR	Throttle position sensor (for sensor malfunction detection)	Ignition switch ON, Accelerator pedal fully released	2.1 to 3.1 V
VTA2 (E4-19) - E2 (E4-28)	G-W - BR	Throttle position sensor (for sensor malfunction detection)	Ignition switch ON, Accelerator pedal fully depressed	4.5 to 5.0 V
VPA (E8-18) - EPA (E8-20)	R-Y - LG-B	Accelerator pedal position sensor (for engine control)	Ignition switch ON, Accelerator pedal fully released	0.5 to 1.1 V
VPA (E8-18) - EPA (E8-20)	R-Y - LG-B	Accelerator pedal position sensor (for engine control)	Ignition switch ON, Accelerator pedal fully depressed	2.6 to 4.5 V
VPA2 (E8-19) - EPA2 (E8-21)	GR-B - R-B	Accelerator pedal position sensor (for sensor malfunction detection)	Ignition switch ON, Accelerator pedal fully released	1.2 to 2.0 V
VPA2 (E8-19) - EPA2 (E8-21)	GR-B - R-B	Accelerator pedal position sensor (for sensor malfunction detection)	Ignition switch ON, Accelerator pedal fully depressed	3.4 to 5.0 V
VCPA (E8-26) - EPA (E8-20)	R - LG-B	Power source of accelerator pedal position sensor (for VPA)	Ignition switch ON	4.5 to 5.0 V
VCP2 (E8-27) - EPA2 (E8-21)	L-W - R-B	Power source of accelerator pedal position sensor (for VPA2)	Ignition switch ON	4.5 to 5.0 V

Symbols (Terminals No.)	Wiring Colors	Terminal Descriptions	Conditions	STD Voltages
VG (E5-28) - E2G (E5-30)	R-Y - R-W	Mass air flow meter	Idling, Shift position P or N, A/C switch OFF	0.5 to 3.0 V
THA (E5-29) - E2 (E4-28)	R-L - BR	Intake air temperature sensor	Idling, Intake air temperature 20°C (68°F)	0.5 to 3.4 V
THW (E4-32) - E2 (E4-28)	Y-B - BR	Engine coolant temperature sensor	Idling, Engine coolant temperature 80°C (176°F)	0.2 to 1.0 V
#10 (E5-6) - E01 (E4-7) #20 (E5-5) - E01 (E4-7) #30 (E5-2) - E01 (E4-7) #40 (E5-1) - E01 (E4-7)	R-L - W-B B - W-B R - W-B G - W-B	Injector	Ignition switch ON	9 to 14 V
#10 (E5-6) - E01 (E4-7) #20 (E5-5) - E01 (E4-7) #30 (E5-2) - E01 (E4-7) #40 (E5-1) - E01 (E4-7)	R-L - W-B B - W-B R - W-B G - W-B	Injector	Idling	Pulse generation (see waveform 1)
IGT1 (E4-17) - E1 (E4-3) IGT2 (E4-16) - E1 (E4-3) IGT3 (E4-15) - E1 (E4-3) IGT4 (E4-14) - E1 (E4-3)	P - BR P-L - BR LG - BR LG-B - BR	Ignition coil with igniter (ignition signal)	Idling	Pulse generation (see waveform 2)
IGF1 (E4-23) - E1 (E4-3)	W-R - BR	Ignition coil with igniter (ignition confirmation signal)	Ignition switch ON	4.5 to 5.0 V
IGF1 (E4-23) - E1 (E4-3)	W-R - BR	Ignition coil with igniter (ignition confirmation signal)	Idling	Pulse generation (see waveform 2)
G2 (E4-26) - NE- (E4-34)	L - G	Camshaft position sensor	Idling	Pulse generation (see waveform 3)
NE+ (E4-27) - NE- (E4-34)	R - G	Crankshaft position sensor	Idling	Pulse generation (see waveform 3)
FC (E8-25) - E1 (E4-3)	L-B - BR	Fuel pump control	Ignition switch ON	9 to 14 V
FC (E8-25) - E1 (E4-3)	L-B - BR	Fuel pump control	Idling	Below 1.5 V
M+ (E4-5) - ME01 (E5-3)	P - W-B	Throttle actuator	Idling with warm engine	Pulse generation (see waveform 4)
M- (E4-4) - ME01 (E5-3)	L - W-B	Throttle actuator	Idling with warm engine	Pulse generation (see waveform 5)
A1A+ (E4-21) - E1 (E4-3)	P - BR	A/F sensor	Always (Ignition switch ON)	3.3 V*1
A1A- (E4-31) - E1 (E4-3)	L - BR	A/F sensor	Always (Ignition switch ON)	3.0 V*1
OX1B (E4-25) - E2 (E4-28)	W - BR	Heated oxygen sensor	Engine speed maintained 2,500 rpm for 2 minutes after warming up sensor	Pulse generation (see waveform 6)
HA1A (E4-1) - E04 (E5-7)	R - W-B	A/F sensor heater	Idling	Below 3.0 V
HA1A (E4-1) - E04 (E5-7)	R - W-B	A/F sensor heater	Ignition switch ON	9 to 14 V
HT1B (E4-2) - E03 (E5-4)	G - W-B	Heated oxygen sensor heater	Idling	Below 3.0 V
HT1B (E4-2) - E03 (E5-4)	G - W-B	Heated oxygen sensor heater	Ignition switch ON	9 to 14 V
KNK1 (E4-29) - EKNK (E4-30)	B - W	Knock sensor	Maintain engine speed 4,000 rpm after warming up engine	Pulse generation (see waveform 7)
OC1+ (E4-13) - OC1- (E4-12)	L-W - W	Camshaft timing oil control valve (OCV)	Idling	Pulse generation (see waveform 8)
PRG (E5-23) - E01 (E4-7)	Y - W-B	Purge VSV	Ignition switch ON	9 to 14 V
PRG (E5-23) - E01 (E4-7)	Y - W-B	Purge VSV	Idling	Pulse generation (see waveform 9)
VPMP (E8-5) - E1 (E4-3)	V-W - BR	Vent valve (built into canister pump module)	Ignition switch ON	9 to 14 V

Symbols (Terminals No.)	Wiring Colors	Terminal Descriptions	Conditions	STD Voltages
MPMP (E8-6) - E1 (E4-3)	G - BR	Leak detection pump (built into canister pump module)	• Leak detection pump OFF	0 to 3 V
MPMP (E8-6) - E1 (E4-3)	G - BR	Leak detection pump (built into canister pump module)	• Leak detection pump ON	9 to 14 V
PPMP (E8-31) - E2 (E4-28)	GR - BR	Canister pressure sensor (built into canister pump module)	Ignition switch ON	3 to 3.6 V
STA (E8-12) - E1 (E4-3)	B-Y - BR	Starter signal	Shift position N, Ignition switch START	5.5 V or more
STP (E7-4) - E1 (E4-3)	L - BR	Stop light switch	Brake pedal depressed	7.5 to 14 V
STP (E7-4) - E1 (E4-3)	L - BR	Stop light switch	Brake pedal released	Below 1.5 V
ST1- (E8-16) - E1 (E4-3)	V-W - BR	Stop light switch	Ignition switch ON, Brake pedal depressed	Below 1.5 V
ST1- (E8-16) - E1 (E4-3)	V-W - BR	Stop light switch	Ignition switch ON, Brake pedal released	7.5 to 14 V
W (E7-30) - E01 (E4-7)	BR - W-B	MIL	Idling	9 to 14 V
W (E7-30) - E01 (E4-7)	BR - W-B	MIL	Ignition switch ON	Below 3.5 V
ELS (E8-15) - E1 (E4-3)	G - BR	Electric load	Tail light switch ON	7.5 to 14 V
ELS (E8-15) - E1 (E4-3)	G - BR	Electric load	Tail light switch OFF	0 to 1.5 V
ELS2 (E7-20) - E1 (E4-3)	B-W - BR	Electric load	Vehicle stationary, Voltage inverter outputs more than 100 W	9 to 14 V
ELS2 (E7-20) - E1 (E4-3)	B-W - BR	Electric load	Vehicle stationary, Voltage inverter outputs 100 W or less	0 to 1.5 V
TACH (E7-1) - E1 (E4-3)	B-W - BR	Engine speed	Idling	Pulse generation (see waveform 10)
SPD (E7-8) - E1 (E4-3)	V-W - BR	Speed signal from combination meter	Driving at 12 mph (20 km/h)	Pulse generation (see waveform 11)
TC (E7-17) - E1 (E4-3)	P-B - BR	Terminal TC of DLC 3	Ignition switch ON	9 to 14 V
PSW (E5-32) - E1 (E4-3)	G-W - BR	Power steering oil pressure switch	While turning steering wheel	Below 1.5 V
F/PS (E7-32) - E1 (E4-3)	R - BR	Airbag sensor assembly	Idling with warm engine	Pulse generation (see waveform 12)
NSW (E8-30) - E1 (E4-3)	V - BR	Park/Neutral switch signal	IG switch ON and shift lever P or N position	Below 1 V
NSW (E8-30) - E1 (E4-3)	V - BR	Park/Neutral switch signal	IG switch ON and shift lever except P and N	9 to 14 V
*2 CANH (E7-33) - E1 (E4-3)	B - BR	Communication signal with other components	Ignition switch ON	Pulse generation (see waveform 13)
*2 CANL (E7-34) - E1 (E4-3)	W - BR	Communication signal with other components	Ignition switch ON	Pulse generation (see waveform 14)
AIRV (E4-24) - E1 (E4-3)	R-W - BR	Air switching valve for secondary air injection system	Idling	9 to 14 V
AIRP (E4-11) - E1 (E4-3)	Y-R - BR	Air pump control	Idling	9 to 14 V
AIDI (E5-20) - E1 (E4-3)	G-R - BR	Diagnostic information signal for air injection system	Air injection system operates	Pulse generation (see waveform 15)
AIP (E5-22) - E2 (E4-28)	GR - BR	Secondary air injection system pressure signal	Ignition switch ON	4.5 to 5.0 V

*1: The ECM terminal voltage is constant regardless of the output voltage from the sensor.

*2: Only for the vehicle equipped with VSC (see page CA-22).

ES

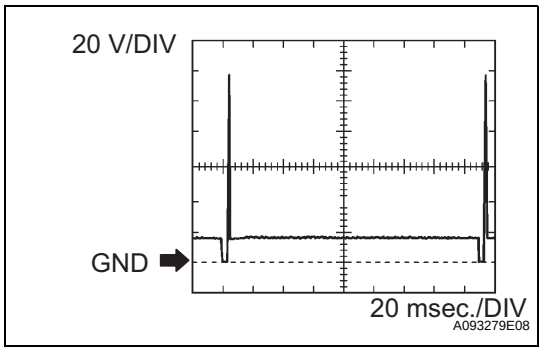

1. WAVEFORM 1

Fuel injector

ECM Terminal Names	Between #10 (to 40) and E01
Tester Ranges	20 V/DIV, 20 msec./DIV
Conditions	Idling

HINT:
The wavelength becomes shorter as the engine rpm increases.

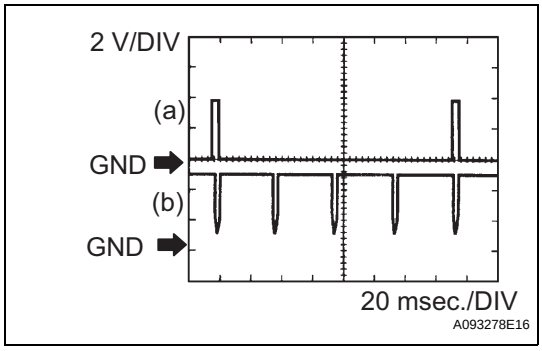

2. WAVEFORM 2

(a) Igniter IGT signal (from ECM to igniter)
(b) Igniter IGF signal (from igniter to ECM)

ECM Terminal Names	(a) Between IGT (1 to 4) and E1 (b) Between IGF1 and E1
Tester Ranges	2 V/DIV, 20 msec./DIV
Conditions	Idling

HINT:
The wavelength becomes shorter as the engine rpm increases.

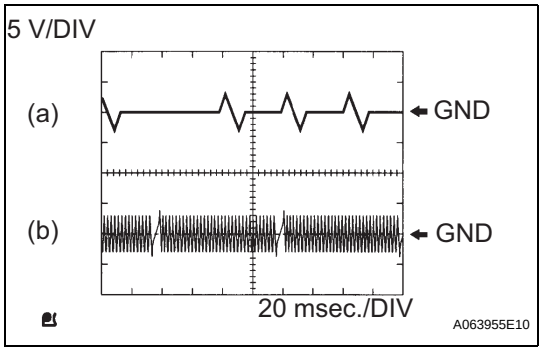

3. WAVEFORM 3

(a) Camshaft position sensor
(b) Crankshaft position sensor

ECM Terminal Names	(a) Between G2 and NE- (b) Between NE+ and NE-
Tester Ranges	5 V/DIV, 20 msec./DIV
Conditions	Idling

HINT:
The wavelength becomes shorter as the engine rpm increases.

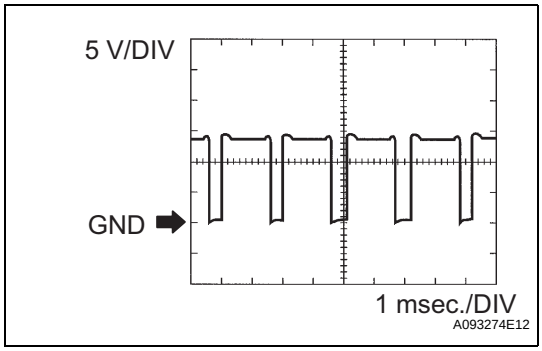

4. WAVEFORM 4

Throttle actuator positive terminal

ECM Terminal Names	Between M+ and ME01
Tester Ranges	5 V/DIV, 1 msec./DIV
Conditions	Idling with warm engine

HINT:
The duty ratio varies depending on the throttle actuator operation.

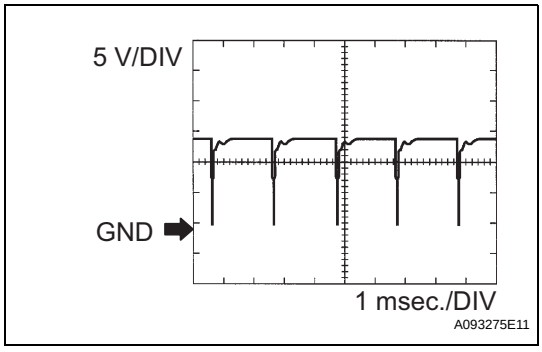

5. WAVEFORM 5

Throttle actuator negative terminal

ECM Terminal Names	Between M- and ME01
Tester Ranges	5 V/DIV, 1 msec./DIV
Conditions	Idling with warm engine

HINT:
The duty ratio varies depending on the throttle actuator operation.

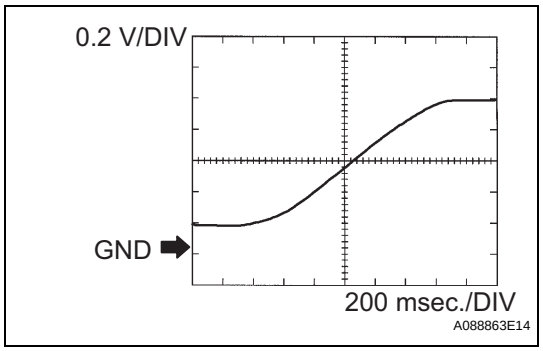

6. WAVEFORM 6

Heated oxygen sensor

ECM Terminal Names	Between OX1B and E2
Tester Ranges	0.2 V/DIV, 200 msec./DIV
Conditions	Engine speed maintained 2,500 rpm for 2 minutes after warming up engine

HINT:
In the DATA LIST, item O2S B1S2 shows the ECM input values from the heated oxygen sensor.

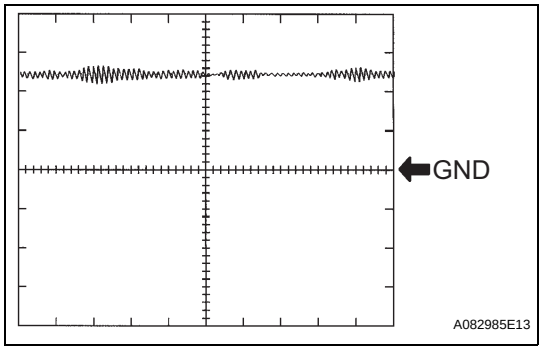

7. WAVEFORM 7

Knock sensor

ECM Terminal Names	Between KNK1 and EKNK
Tester Ranges	0.01 to 10 V/DIV, 0.01 to 10 msec./DIV
Conditions	Engine speed maintained 4,000 rpm after warming up engine

HINT:
- The wavelength becomes shorter as the engine rpm increases.
- The waveforms and amplitudes displayed differ slightly depending on the vehicle.

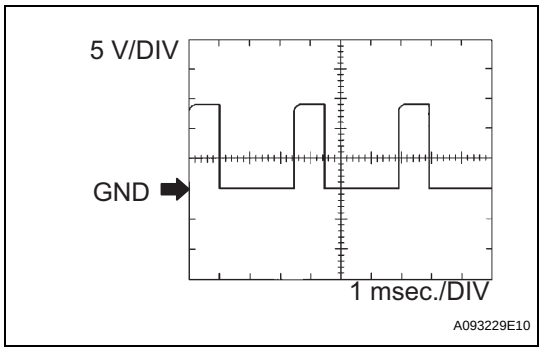

8. WAVEFORM 8

Camshaft timing oil control valve (OCV)

ECM Terminal Names	Between OC1+ and OC1-
Tester Ranges	5 V/DIV, 1 msec./DIV
Conditions	Idling

HINT:
The wavelength becomes shorter as the engine rpm increases.

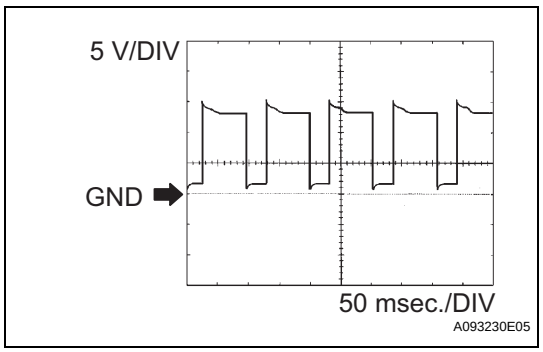

9. WAVEFORM 9

EVAP VSV

ECM Terminal Names	Between PRG and E01
Tester Ranges	5 V/DIV, 50 msec./DIV
Conditions	Idling

HINT:
If the waveform is not similar to the illustration, check the waveform again after idling for 10 minutes or more.

ES

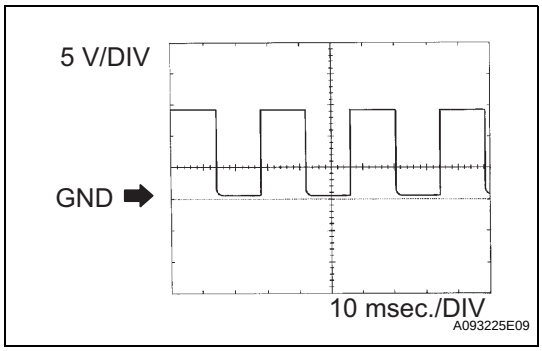

10. WAVEFORM 10

Engine speed signal

ECM Terminal Names	Between TACH and E1
Tester Ranges	5 V/DIV, 10 msec./DIV
Conditions	Idling

HINT:
The wavelength becomes shorter as the engine rpm increases.

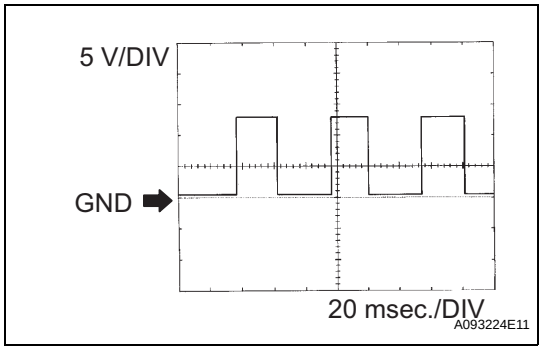

11. WAVEFORM 11

Vehicle speed signal

ECM Terminal Names	Between SPD and E1
Tester Ranges	5 V/DIV, 20 msec./DIV
Conditions	Driving at 12 mph (20 km/h)

HINT:
The wavelength becomes shorter as the vehicle speed increases.

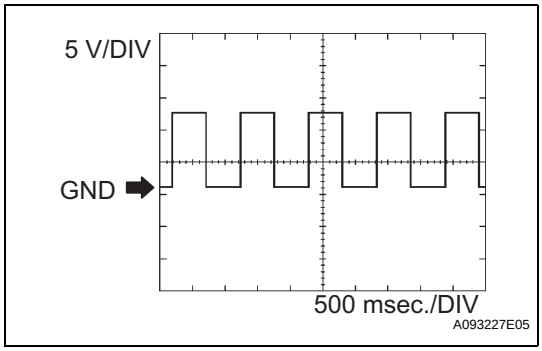

12. WAVEFORM 12

Airbag sensor assembly

ECM Terminal Names	Between F/PS and E1
Tester Ranges	5 V/DIV, 500 msec./DIV
Conditions	Idling with warm engine

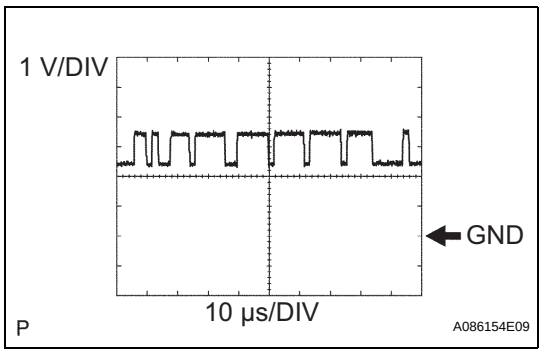

13. WAVEFORM 13

CAN communication signal (reference)

ECM Terminal Names	Between CANH and E1
Tester Ranges	1 V/DIV, 10 µs/DIV
Conditions	Ignition switch ON

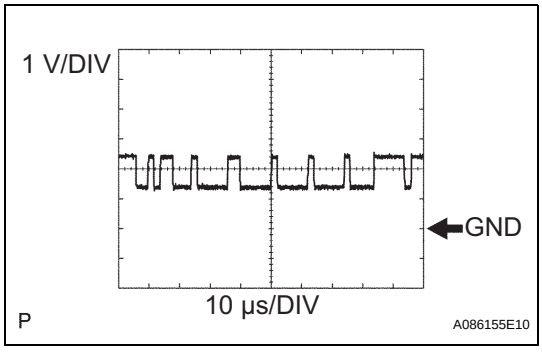

14. WAVEFORM 14

CAN communication signal (reference)

ECM Terminal Names	Between CANL and E1
Tester Ranges	1 V/DIV, 10 µs/DIV
Conditions	Ignition switch ON

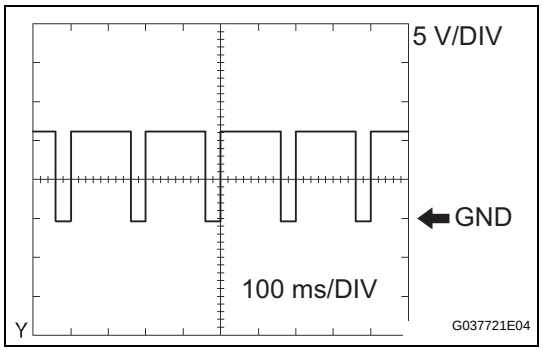

15. WAVEFORM 15

Terminal DI of air injection control driver

ECM Terminal Names	Between AIDI and E1
Tester Ranges	5 V/DIV, 100 ms/DIV
Conditions	Performing ACTIVE TEST using intelligent tester (air injection system)

HINT:

The wavelength changes when the air injection control driver detects malfunctions in the air injection system (see page ES-200).

ES

2007 TOYOTA TACOMA ELECTRICAL WIRING DIAGRAM SYSTEM CIRCUITS

	Page
ABS (w/ VSC)	172
ABS (w/o VSC)	182
Accessory Meter	234
Air Conditioning	288
Audio System (Built–in Type Amplifier)	280
Audio System (Separate Type Amplifier)	268
Auto LSD	172
Automatic Glare–Resistant EC Mirror	230
Back–Up Light	128
Charging	78
Cigarette Lighter	244
Clock	260
Combination Meter	282
Cruise Control (1GR–FE)	158
Cruise Control (2TR–FE)	164
Door Lock Control	202
Downhill Assist Control	172
Electronically Controlled Transmission and A/T Indicator (1GR–FE)	144
Electronically Controlled Transmission and A/T Indicator (2TR–FE)	152
Engine Control (1GR–FE)	78
Engine Control (2TR–FE)	90
Engine Immobiliser System (1GR–FE)	102
Engine Immobiliser System (2TR–FE)	108
Front Fog Light	118
Headlight	110
Hill–Start Assist Control	172
Horn	238
Ignition	72
Illumination	122
Interior Light	130
Key Reminder	142
Light Auto Turn Off System	138
Multi Mode 4WD	212
Multiplex Communication System (CAN)	170
Power Outlet (115V)	240
Power Outlet (12V)	244
Power Source	84
Power Window	198
Rear Differential Lock (2WD)	218
Rear Differential Lock (4WD)	212
Remote Control Mirror	228
Seat Belt Warning	232
Shift Lock	226
SRS	187
Starting	88
Stop Light	128
Taillight	118